NAVSHIPS 0969-028-4010

VOLUME 1

TECHNICAL MANUAL

for

DIGITAL READOUT ELECTRONIC COUNTER AN/USM-207

DEPARTMENT OF THE NAVY

BUREAU OF SHIPS

NAVSHIPS 0969-028-4010

VOLUME 1

TECHNICAL MANUAL

for

DIGITAL READOUT ELECTRONIC COUNTER AN/USM-207

DEPARTMENT OF THE NAVY

BUREAU OF SHIPS

Approved: 27 July 1965

LIST OF EFFECTIVE PAGES

PAGE NUMBERS	CHANGE IN EFFECT	PAGE NUMBERS	CHANGE IN EFFECT	PAGE NUMBERS	CHANGE IN EFFECT
Title Page (Vol 1)	Original	5-6 to 5-12	Original	5-91	T-1
Title Page (Vol 2)	Original	5-13 to 5-18	T-4	5-92 to 5-94	Original
ii	T-4	5-18A to 5-18B	T-4	5-95	T-4
iii to iv	Original	5-19 to 5-22	T-4	5-95A to 5-95B	T-4
v to viii	T-4	5-23 to 5-29	Original	5-96	T-4
viiiA to viiiB	T-4	5-30 to 5-32	T-4	5-97 to 5-101	Original
ix	T-1	5-32A to 5-32B	T-4	5-102	T-1
1-0	T-1	5-33	T-4	5-103 to 5-106	T-4
1-1 to 1-2	Original	5-34	Original	5-106A to 5-106B	T-4
1-3 to 1-7	T-4	5-34A to 5-34B	T-4	5-107	T-1
2-0	T-4	5-35	T-4	5-108 to 5-109	Original
2-1	T-1	5-36 to 5-40	Original	5-110	T-4
3-0	Original	5-41 to 5-42	T-1	5-111 to 5-116	Original
3-ii to 3-iv (Vol 2)	Original	5-42A to 5-42B	T-1	5-116A to 5-116B	T-4
3-1 (Vol 2)	T-1	5-43 to 5-48	T-4	5-117 to 5-122	T-4
3-2 to 3-7 (Vol 2)	Original	5-49 to 5-57	Original	5-122A to 5-122B	T-4
3-8 (Vol 2)	T-1	5-58	T-4	5-123 to 5-124	T-4
3-9 to 3-15 (Vol 2)	Original	5-58A to 5-58B	T-4	5-124A to 5-124B	T-4
3-16 to 3-18 (Vol 2)	T-4	5-59	T-1	5-125 to 5-126	Original
3-19 to 3-22 (Vol 2)	Original	5-60 to 5-70	Original	5-126A to 5-126B	T-4
4-1 to 4-22	Original	5-71 to 5-72	T-4	5-127 to 5-128	T-4
4-23 to 4-28	T-4	5-72A to 5-72B	T-1	5-129 to 5-130	Original
4-29 to 4-52	Original	5-73	T-4	5-131 to 5-132	T-4
4-53 to 4-54	T-4	5-74	T-2	5-133 to 5-136	Original
4-55 to 4-101	Original	5-75	T-1	5-137 to 5-138	T-1
4-102	T-4	5-76 to 5-78	Original	5-139 to 5-154	Original
4-103 to 4-106	Original	5-79 to 5-83	T-4	5-155 to 5-158	T-4
5-1	T-1	5-83A to 5-83B	T-4	6-1	T-4
5-2	Original	5-84	T-4	6-1A to 6-1R	T-4
5-3	T-4	5-85 to 5-86	Original	6-2 to 6-68	Original
5-4	Original	5-87 to 5-88	T-4	i-1 to i-8	Original
5-5	T-4	5-89 to 5-90	Original		

COMPUTER MEASUREMENTS COMPANY, A DIVISION OF PACIFIC INDUSTRIES, INC., SAN FERNANDO, CALIFORNIA 91342. Contracts: NObsr 91111 and N600(24-126)65900.

Errors found in this publication (other than obvious typographical errors), which have not been corrected by means of Temporary Corrections or Permanent Changes should be reported. Such report should include the complete title of the publication and the publication number (short title); identify the page and line or figure and location of the error; and be forwarded to the Electronics Publications Section of the Bureau of Ships.

All Navy requests for NAVSHIPS electronics publications listed in the current issue of NAVSANDA Publication 2002 "Requisitioning Guide and Index of Forms and Publications", Cognizance Symbol I, or in a subsequent issue of the Electronics Information Bulletin should be directed to the appropriate Forms and Publications Supply Point.

4-23 S-115 converter
S-113 oscillator

TABLE OF CONTENTS

Paragraph		Page
	SECTION 1 – GENERAL INFORMATION	
1-1.	Scope	1-1
1-2.	General Description	1-1
1-3.	Description of Unit	1-1
	a. Digital Readout Electronic Counter CP-814/USM-207	1-1
	b. Radio Frequency Oscillator O-1267/USM-207	1-1
	c. Electronic Frequency Converter CV-1921/USM-207	1-1
	d. Counter Cover CW-801/USM-207	1-1
1-4.	Reference Data	1-1
	a. Frequency Measurement	1-1
	b. Period Measurement	1-2
	c. Frequency-Ratio Measurement	1-2
	d. Time Interval Measurement	1-2
	e. Time Interval Measurement, External Clock (A/B→C)	1-2
	f. Total Count	1-2
	g. Display	1-2
	h. Time Base	1-2
	i. Reference Frequency Input	1-2
	j. Trigger Error	1-2
	k. Standard 1-Mc Output	1-2
	l. Standard Frequency	1-2
	m. Scaled Outputs	1-2
	n. Printer Interface	1-4
	o. Reset	1-4
	p. Power Requirements	1-4
	q. Weight	1-4
	r. Dimensions	1-4
1-5.	Equipment Supplied	1-4
1-6.	Equipment and Publications Required but not Supplied	1-4
1-7.	Factory or Field Changes	1-4
1-8.	Preparation for Reshipment	1-4
	SECTION 2 – INSTALLATION	
2-1.	Unpacking and Handling	2-0
2-2.	Power Requirements	2-0
2-3.	Site Selection	2-0
2-4.	Installation Requirements	2-0
2-5.	Cable Assemblies	2-0
	a. Power Cable	2-0
	b. RF Cables	2-0
	c. Adapters and Tee Connectors	2-0
	d. Printer Cable	2-0
2-6.	Printed Circuit Board Extractor	2-1
2-7.	Inspection and Adjustment	2-1
2-8.	Interference Reduction	2-1
	SECTION 3 – OPERATION	
3-1.	Functional Operation	3-1
3-2.	Preparation for Use	3-1
3-3.	Description of Controls, Connectors, and Indicators	3-1
3-4.	Operating Precautions	3-1
3-5.	Operating Suggestions for Measuring Frequency, Frequency Ratio, for Totalizing, and Scaling	3-9
	a. Input Signal Frequency Below 10 Cps	3-9
	b. Input Signal Frequency Between 10 Cps and 1 Mc	3-9
	c. Input Signal Between 1 Mc and 35 Mc	3-9
	d. Input Signal Between 35 Mc and 100 Mc	3-9
	e. Input Signal Between 85 Mc and 500 Mc (Frequency Measurement Only)	3-9
3-6.	Test Applications	3-9
	a. Frequency Measurement	3-9
	b. Period and Multiple Period Measurement	3-9
	c. Frequency-Ratio Measurement	3-10
	d. Time Interval Measurement	3-10
	e. Time Interval Measurement with an External Standard	3-10
	f. Totalizing	3-10
	g. Scaling the Standard Frequency	3-10
	h. Scaling the Input Frequency	3-10
3-7.	Operating Procedures	3-10
3-8.	Connection of Frequency Standard	3-10
3-9.	Operator's Maintenance	3-21
3-10.	Operating Checks and Adjustments	3-21
3-11.	Preventive Maintenance	3-21
3-12.	Emergency Maintenance	3-21
	SECTION 4 – TROUBLE SHOOTING	
4-1.	Logical Trouble Shooting	4-1
	a. Symptom Recognition	4-1
	b. Symptom Elaboration	4-1
	c. Listing Probable Faulty Function	4-1
	d. Localizing the Faulty Function	4-1
	e. Localizing Trouble to the Circuit	4-1
	f. Failure Analysis	4-1
	g. Test Points	4-1
4-2.	Overall Function Description	4-1
	a. Functional Sections	4-1
	b. Radio Frequency Oscillator O-1267/USM-207	4-1
	c. Electronic Frequency Converter CV-1921/USM-207	4-1
	d. A Amplifier	4-2
	e. B Amplifier	4-2
	f. C Amplifier	4-2

TABLE OF CONTENTS (Continued)

Paragraph		Page
	SECTION 4 – TROUBLE SHOOTING (cont)	
4-2.	g. 10 Mc and 1 Mc Multiplier	4-2
	h. Scaler	4-2
	i. Gate Control	4-2
	j. Count Control	4-2
	k. Cycle Control	4-2
	l. Count Decades	4-2
	m. Readout	4-2
	n. Power Supply	4-2
4-3.	Overall Counter Trouble Shooting	4-5
	a. Test Equipment and Special Tools	4-5
	b. Trouble-Shooting Procedure	4-5
	c. Servicing Block Diagram	4-5
4-4.	Radio Frequency Oscillator O-1267/USM-207	4-15
	a. Radio Frequency Oscillator O-1267/USM-207 Functional Description	4-15
	b. Radio Frequency Oscillator O-1267/USM-207 Trouble Shooting	4-15
	c. Useful Illustrations	4-15
4-5.	Electronic Frequency Converter CV-1921/USM-207	4-21
	a. Electronic Frequency Conter CV-1921/USM-207 Functional Description	4-21
	b. Frequency Converter CV-1921/USM-207 Trouble Shooting	4-21
	c. Useful Illustrations	4-21
4-6.	A Amplifier	4-25
	a. A Amplifier Functional Description	4-25
	b. A Amplifier Trouble Shooting	4-25
	c. Useful Illustrations	4-25
4-7.	B Amplifier	4-29
	a. B Amplifier Functional Description	4-29
	b. B Amplifier Trouble Shooting	4-29
	c. Useful Illustrations	4-29
4-8.	C Amplifier	4-35
	a. C Amplifier Functional Description	4-35
	b. C Amplifier Trouble Shooting	4-35
	c. Useful Illustrations	4-35
4-9.	10-Mc and 1-Mc Multiplier	4-39
	a. 10-Mc and 1-Mc Multiplier Functional Description	4-39
	b. 10-Mc and 1-Mc Multiplier Trouble Shooting	4-39
	c. Useful Illustrations	4-39
4-10.	Scaler	4-45
	a. Scaler Functional Description	4-45
	b. Scaler Trouble Shooting	4-46
	c. Useful Illustrations	4-47
4-11.	Gate Control	4-57
	a. Gate Control Functional Description	4-57
	b. Gate Control Trouble Shooting	4-57
	c. Useful Illustrations	4-57
4-12.	Count Control	4-63
	a. Count Control Functional Description	4-63
	b. Count Control Trouble Shooting	4-63
	c. Useful Illustrations	4-63
4-13.	Cycle Control	4-67
	a. Cycle Control Functional Description	4-67
	b. Cycle Control Trouble Shooting	4-67
4-14.	Count Decades	4-71
	a. Count Decade Functional Description	4-71
	b. Count Decade Trouble Shooting	4-73
	c. Useful Illustrations	4-74
4-15.	Readout	4-89
	a. Readout Functional Description	4-89
	b. Readout Trouble Shooting	4-89
	c. Useful Illustrations	4-91
4-16.	Power Supply	4-101
	a. Power Supply Functional Description	4-101
	b. Power Supply Trouble Shooting	4-101
	c. Useful Illustrations	4-101
	SECTION 5 – MAINTENANCE	
5-1.	Failure, and Performance and Operational Reports	5-1
5-2.	Preventive Maintenance	5-1
	a. Servicing the Air Filter	5-1
	b. Fan Motor	5-1
	c. Visual Inspection	5-1
5-3.	Reference Standards Procedure	5-1
5-4.	Tuning and Adjustment	5-28
	a. Removing the Top Cover	5-28
	b. Control Settings	5-28
	c. Extending Printed-Circuit Boards	5-28
	d. Power Supply Regulator A1A1 Adjustment	5-29
	(1) Test Equipment	5-31
	(2) Test Setup	5-31
	(3) Instructions	5-31
	e. Frequency Multiplier A1A6 Adjustment	5-31
	(1) Test Equipment and Reference Input	5-31
	(2) Instructions	5-31
	f. Amplifier Electronic Gate A1A8 Adjustment	5-31
	(1) Test Equipment	5-31
	(2) Instructions	5-31
	g. Frequency Divider A1A9 Adjustment	5-31
	(1) Test Equipment	5-31
	(2) Instructions	5-31

TABLE OF CONTENTS (Continued)

Paragraph		Page
	SECTION 5 – MAINTENANCE (cont)	
5-4.	h. Af-Rf Amplifier A1A11 Adjustment	5-32A
	(1) Test Equipment	5-32A
	(2) Instructions	5-32A
	i. Radio Frequency Oscillator A3, Frequency Adjustment	5-32A
	(1) Removing the Electronic Frequency Converter A1A2	5-32A
	(2) Warmup	5-32A
	(3) Test Equipment and Frequency Standard	5-33
	(4) Test Setup	5-33
	(5) Instructions	5-33
	j. Radio Frequency Oscillator A3 Amplitude Adjustment	5-33
	(1) Test Equipment	5-33
	(2) Dummy Load	5-33
	(3) Test Setup	5-33
	(4) Instructions	5-33
	jA. Sensitivity Control A1R51 Adjustment	5-33
	(1) Preliminary Test Setup	5-33
	(2) Test Equipment	5-33
	(3) Test Accessories	5-33
	(4) Test Setup	5-33
	(5) Instructions	5-33
	k. Electronic Frequency Converter A2 Adjustment	5-33
	(1) Preliminary Test Setup	5-33
	(2) Test Equipment	5-33A
	(3) Test Accessories	5-33A
	(4) Instructions for Adjusting the Frequency Multiplier A2A1	5-33A
	(5) Instructions for Adjusting the Harmonic Generator and Cavity	5-37
	(6) Balancing the Mixer	5-39
	(7) Calibrating the Level Meter A2M1	5-39
5-4A.	Removal of Top and Bottom Covers	5-41
5-5.	Replacement	5-41
	a. Printed-Circuit Boards A1A2 through A1A7, A1A9, and A1A10	5-41
	b. Printed-Circuit Board A1A1	5-41
	c. Printed-Circuit Boards A1A12 through A1A19	5-41
	d. Printed-Circuit Board A1A8	5-41
	e. Printed-Circuit Board A1A11	5-41
	f. Replacement of Parts on Printed-Circuit Boards	5-41

Paragraph		Page
	SECTION 5 – MAINTENANCE (cont)	
5-5.	g. Access to Af-Rf Amplifier A1A20, A Channel Variable Attenuator A1A21, B and C Channel Variable Attenuator and Trigger Level Controls A1A22 and A1A23, B and C Slope Switches A1S10, and A1S12, Mode Selector Switch A1S9, and Connectors A1J1, A1J2, A1J3, A1J4, and A1J5	5-42
	h. Replacing Af-Rf Amplifier A1A20	5-42
	i. Replacing the Channel A Variable Attenuator A1A21	5-42
	j. Replacing the B Channel Variable Attenuator and Trigger Level Control A1A22	5-45
	k. Replacing the C Channel Variable Attenuator and Trigger Level Control A1A23	5-46
	l. Access to Function Switch A1S4, Time Base Switch A1S3, Std Freq Out Switch A1S2, and Power Switch A1S1	5-47
	m. Replacing the Function Switch A1S4	5-48
	n. Replacing the Time Base Switch A1S3 and Std Freq Out Switch A1S2	5-48
	o. Replacing the Power Switch A1S1	5-53
	p. Replacing the Units Annunciator Lamps A1DS11 through A1DS15	5-54
	q. Replacing the Decimal Point Lamps A1DS4 through A1DS10	5-55
	r. Access to Parts in the Electronic Frequency Converter A2	5-55
	s. Separating the Front Panel and Cavity Casting from the Converter Chassis	5-55
	t. Access to Parts in the Cavity Casting	5-55
	u. Replacing the Mixing Frequency Selector Switch A2S4	5-55
	v. Replacing the Nylon Bevel Shaft A2MP22	5-58

TABLE OF CONTENTS (Continued)

Paragraph			Page
	SECTION 5 – MAINTENANCE (cont)		
5-5.	w.	Selecting the Value of Capacitor A2C14	5-59
	x.	Replacing Rf Transformer A2T1	5-61
	y.	Replacing Resistor A2R7	5-61
	z.	Reassembling the Converter	5-61
	aa.	Access to Parts in the Radio Frequency Oscillator A3	5-61
	ab.	Replacing the 1-Mc Oscillator A3Y1	5-61
	ac.	Shipping Instructions – 1-Mc Oscillator A3Y1	5-62
	ad.	Access to Parts and Test Points in the 1-Mc Oscillator A3Y1	5-62
	ae.	Disassembling the 1-Mc Oscillator A3Y1	5-62
	af.	Replacing Transistors A3Y1Q5 through A3Y1Q7	5-62
	ag.	Replacing Transistor A3Y1Q8	5-64
	ah.	Replacing Crystal A3Y1Y1	5-64
	ai.	Setting the Temperature Inside the Crystal Oven	5-65
	aj.	Selecting the Value of Capacitor A3Y1C4	5-67
	ak.	Selecting the Value of Resistor A3Y1R1	5-68
	al.	Replacing Leads on Connectors A1J13 and A1J15	5-71
	am.	Replacing Jumper Wires on Connectors A1J8 and A1J9 of the Counter, A2P2 of the Converter, and A3P1 of the Oscillator	5-71
	an.	Alignment Procedure Following Replacement of Connectors A2P2 and A3P1	5-71
	ao.	Compatibility Adjustment before Installation of New Converter A2 or After Installation of New Multiplier A1A6	5-71
	ap.	Replacing Gate Lamp A1DS2 and Oven Lamp A1DS3	5-72A
	aq.	Replacing Reset Switch A1S6	5-72A
	ar.	Replacing Power Indicator Lamp A1DS1	5-72A
5-6.		Location of Parts	5-72A
	SECTION 6 – PARTS LIST		
6-1.		Introduction	6-1
	a.	Reference Designations	6-1
	b.	Ref Desig Prefix	6-1
6-2.		Maintenance Parts List	6-1
6-3.		List of Manufacturers	6-1
6-4.		Stock Number Identification	6-1
6-5.		Notes	6-1

LIST OF ILLUSTRATIONS

Figure		Page
	SECTION 1 – GENERAL INFORMATION	
1-1.	Digital Readout Electronic Counter AN/USM-207	1-0
	SECTION 3 – OPERATION	
3-1.	Counter Front Panel Controls, Connectors, and Indicators	3-1
3-2.	Counter Rear Panel Controls and Connectors	3-8
	SECTION 4 – TROUBLE SHOOTING	
4-1.	Digital Readout Electronic Counter, AN/USM-207, Overall Functional Block Diagram	4-3
4-2.	Overall Functional and Servicing Block Diagram	4-9
4-3.	Overall Logic Diagram (2 sheets)	4-11
4-4.	Radio Frequency Oscillator O-1267/USM-207, Functional and Servicing Block Diagram	4-19
4-5.	Electronic Frequency Converter CV-1921/USM-207, Functional and Servicing Block Diagram	4-23
4-6.	"A" Amplifier, Functional and Servicing Block Diagram	4-27
4-7.	"B" Amplifier, Trigger Point Waveforms	4-30
4-8.	"B" Amplifier, Functional and Servicing Block Diagram	4-33
4-9.	"C" Amplifier, Functional and Servicing Block Diagram	4-37

LIST OF ILLUSTRATIONS (Continued)

Figure		Page
	SECTION 4 – TROUBLE SHOOTING (cont)	
4-10.	10 Mc and 1 Mc Multiplier, Functional and Servicing Block Diagram	4-43
4-11.	Typical Scaler Flip-Flop, Simplified Schematic Diagram	4-45
4-12.	Coupled Scaler Flip-Flops, Simplified Schematic Diagram	4-45
4-13.	Coupled Scaler Flip-Flops, Collector Waveforms	4-46
4-14.	Output Gating System, Simplified Schematic Diagram	4-47
4-15.	Scaler, Functional and Servicing Block Diagram (2 sheets)	4-53
4-16.	Gate Control, Functional and Servicing Block Diagram	4-61
4-17.	Count Control, Functional and Servicing Block Diagram	4-65
4-18.	Cycle Control, Timing Diagram	4-67
4-19.	Cycle Control, Functional and Servicing Block Diagram	4-69
4-20.	Typical Low-Speed Count Decade Flip-Flop, Simplified Schematic Diagram	4-71
4-21.	Coupled Low-Speed Count Decade Flip-Flops, Simplified Schematic Diagram	4-71
4-22.	Coupled Count Decade Flip-Flops, Collector Waveforms	4-72
4-23.	Typical High-Speed Count Flip-Flop, Simplified Schematic Diagram	4-73
4-24.	Count Decade, Functional and Servicing Block Diagram (3 sheets)	4-83
4-25.	Store and Track Mode Readout Waveforms	4-90
4-26.	Typical Readout Indicator Driver, Simplified Schematic Diagram	4-91
4-27.	Typical Readout Decoding, Simplified Schematic Diagram	4-92
4-28.	Typical Decimal Point Lamp Coding, Simplified Schematic Diagram	4-93
4-29.	Readout, Functional and Servicing Block Diagram (2 sheets)	4-97
4-30.	Power Supply, Functional and Servicing Block Diagram	4-105
	SECTION 5 – MAINTENANCE	
5-1.	Printed-Circuit Board Removal and Extension	5-29
5-2.	Counter Top View, Location of Adjustments and Test Points	5-30
5-3.	Electronic Frequency Converter A2, Preliminary Test Setup	5-34
5-4.	Electronic Frequency Converter A2, Location of Adjustments and Test Points	5-35
5-5.	Frequency Multiplier A2A1 Adjustment, Test Setup	5-36
5-6.	Harmonic Generator and Cavity, Test Setup	5-38
5-7.	Level Meter A2M1 Calibration, Test Setup	5-40
5-8.	Left Section of Front Panel, Removal from Counter	5-42
5-9.	Left Section of Front Panel, Exploded View	5-43
5-10.	Channel A Variable Attenuator A1A21, Location of Parts on Switch	5-44
5-11.	Channel B Variable Attenuator A1A22, Location of Parts	5-45
5-12.	Channel C Variable Attenuator A1A23, Location of Parts	5-47
5-13.	Counter, Disassembly of Front Section	5-48
5-14.	Functional Switch A1S4, Wafer and Terminal Designations	5-49
5-15.	Time Base Switch A1S3 and Std Freq Out Switch A1S2, Wafer and Terminal Designations	5-50
5-16.	Power Switch A1S1, Wafer and Terminal Designations	5-53
5-17.	Annunciator Block, Exploded View	5-54
5-18.	Electronic Frequency Converter A2 Exploded View, Front and Rear Chassis Separated	5-56
5-19.	Cavity Casting, Exploded View	5-57
5-20.	Electronic Frequency Converter A2, Cavity, Location of Parts	5-58
5-21.	Mixing Frequency Selector Switch A2S4, Wafer Diagram	5-58
5-22.	Electronic Frequency Converter A2, Front Chassis, Exploded View	5-59
5-23.	Selecting Capacitor A2C14, Test Setup	5-60
5-24.	Disassembly of 1-Mc Oscillator A3Y1	5-63
5-25.	Disassembly of Crystal Oven	5-63
5-26.	Disassembly of Frequency Generator	5-64
5-27.	Crystal Oven, Location of Parts	5-65
5-28.	1-Mc Oscillator A3Y1 Temperature Setting, Test Setup	5-66
5-29.	1-Mc Oscillator A3Y1, Frequency versus Temperature Curve	5-67
5-30.	Selecting Capacitor A3Y1C4, Test Setup	5-68
5-31.	Selecting Resistor A3Y1R1, Test Setup	5-69
5-32.	1-Mc Oscillator A3Y1 Trouble Shooting, Test Setup	5-70
5-33.	Counter Top View, Location of Parts	5-72

LIST OF ILLUSTRATIONS (Continued)

Figure		Page
	SECTION 5 – MAINTENANCE (cont)	
5-34.	Counter Bottom View, Location of Parts	5-73
5-35.	Counter Front View, Location of Parts	5-74
5-36.	Counter Front View, with Converter Removed, Location of Fuses and Oscillator Adjustments	5-74
5-37.	Counter Rear View, Location of Parts	5-75
5-38.	Voltage Regulator A1A1, Location of Parts	5-77
5-39.	Frequency Dividers A1A2, A1A3, and A1A4, Location of Parts	5-79
5-40.	Frequency Divider A1A5, Location of Parts	5-81
5-41.	Frequency Multiplier A1A6, Location of Parts (2 sheets)	5-83
5-42.	Display Control A1A7, Location of Parts	5-85
5-43.	Af-Rf Amplifier A1A8, Location of Parts	5-87
5-44.	Frequency Divider A1A9, Location of Parts (2 sheets)	5-89
5-45.	Electronic Gate A1A10, Location of Parts	5-93
5-46.	Af-Rf Amplifier A1A11, Location of Parts (2 sheets)	5-95
5-47.	Digital Display Indicators – Frequency Dividers A1A12, A1A13, A1A14, A1A15, and A1A16, Location of Parts	5-97
5-48.	Digital Display Indicators – Frequency Dividers A1A17 and A1A18, Location of Parts	5-99
5-49.	Digital Display Indicator – Frequency Divider A1A19, Location of Parts	5-101
5-50.	Af-Rf Amplifier A1A20, Location of Parts	5-102
5-51.	Heterodyne Frequency Converter A2 Rear View, Location of Parts	5-102
5-52.	Electronic Frequency Converter A2 Top and Front View, Location of Parts	5-103
5-53.	Frequency Multiplier A2A1, Location of Parts	5-105
5-54.	Video Amplifier and Harmonic Generator, Location of Parts	5-106
5-55.	Radio Frequency Oscillator A3, Left-Side View, Location of Parts	5-107
5-56.	Radio Frequency Oscillator A3, Right-Side View, Location of Parts	5-107
5-57.	Oscillator Power Supply and Amplifier, Location of Parts	5-108
5-58.	1-Mc Oscillator A3Y1 Frequency Generator, Location of Parts	5-109
5-59.	Power Distribution Diagram	5-110
5-60.	Radio Frequency Oscillator, Schematic Diagram (2 sheets)	5-111
5-61.	Electronic Frequency Converter Less Frequency Multiplier A2A1, Schematic Diagram (for Converters with Serial No. A4 through A13, A15, A17, A18, A20, A21, A22, A24 through A28, A30, A31, A33, and A36)	5-115
5-61A.	Electronic Frequency Converter Less Frequency Multiplier A2A1, Schematic Diagram (for Converters Serial No. A1, A2, A3, A14, A16, A19, A23, A29, A32, A34, A35, A37, and Up)	5-116A
5-62.	Electronic Frequency Converter Frequency Multiplier A2A1, Schematic Diagram	5-117
5-63.	A Amplifier, Schematic Diagram	5-119
5-64.	B Amplifier with A1A11 Model MP14-546L4 Af-Rf Amplifier, Schematic Diagram	5-121
5-64A.	B Amplifier with A1A11 Model MP14-546L6 (or Higher "L" Number) Af-Rf Amplifier, Schematic Diagram	5-122A
5-65.	C Amplifier with A1A11 Model MP14-546L4 Af-Rf Amplifier, Schematic Diagram	5-123
5-65A.	C Amplifier with A1A11 Model MP14-546L6 (or Higher "L" Number) Af-Rf Amplifier, Schematic Diagram	5-124A
5-66.	10-Mc and 1-Mc Multiplier with Model MP25-526L9 Frequency Multiplier, Schematic Diagram	5-125
5-66A.	10-Mc and 1-Mc Multiplier with Model MP25-526L10 (or Higher "L" Number) Frequency Multiplier, Schematic Diagram	5-126A
5-67.	Scaler, Frequency Divider A1A5, Schematic Diagram	5-127
5-68.	Scaler, Frequency Dividers A1A2 through A1A4, Schematic Diagram	5-129
5-69.	Gate Control, Schematic Diagram	5-131
5-70.	Count Control, Schematic Diagram	5-133
5-71.	Cycle Control, Schematic Diagram	5-135
5-72.	Count Decades, Frequency Divider A1A9, Schematic Diagram (2 sheets)	5-137
5-73.	Count Decades, Inverter Circuits on A1A19, Schematic Diagram	5-141
5-74.	Count Decades, Frequency Divider Circuits on A1A17 and A1A18, Schematic Diagram	5-143

LIST OF ILLUSTRATIONS (Continued

Figure		Page
	SECTION 5 – MAINTENANCE (cont)	
5-75.	Count Decades, Frequency Divider Circuits on A1A12 through A1A16, Schematic Diagram	5-145
5-76.	Count Decades, Printer Connector, Schematic Diagram	5-147
5-77.	Readout, Digital Display Circuits, Schematic Diagram	5-149
5-78.	Readout, Annunciator Circuits, Schematic Diagram	5-151
5-79.	Readout, Decimal Point Coding, Schematic Diagram	5-153
5-80.	Power Supply, Schematic Diagram	5-155
5-81.	Function Selection, Time Base Selection, and Standard Frequency Output Selection Circuits, Schematic Diagram	5-157

LIST OF TABLES

Table		Page
	SECTION 1 – GENERAL INFORMATION	
1-1.	Equipment Supplied	1-3
1-2.	Equipment and Publications Required but not Supplied	1-4
	SECTION 2 – INSTALLATION	
2-1.	Connections to Printer Connector	2-1
	SECTION 3 – OPERATION	
3-1.	Voltage Inputs	3-2
3-2.	Description of Operating Controls, Connectors, and Indicators	3-2
3-3.	Procedure for Turning on Counter	3-10
3-4.	Procedure for Self Test	3-10
3-5.	Procedure for Frequency Measurement, with the Input Signal Applied to Channel A	3-11
3-6.	Procedure for Frequency Measurement, with the Input Signal Applied to Channel C	3-11
3-7.	Procedure for Direct Frequency Measurement, with the Input Signal Applied to the Converter Input Channel	3-11
3-8.	Procedure for Measuring Period	3-12
3-9.	Procedure for Measuring Frequency Ratio, with Numerator Signal Applied to Channel A	3-12
3-10.	Procedure for Measuring Frequency Ratio, with Numerator Signal Applied to Channel C	3-13
3-11.	Procedure for Measuring Frequency Ratio, with Numerator Signal Applied to the Converter Channel	3-14

LIST OF TABLES (Continued)

Table		Page
	SECTION 3 – OPERATION (cont)	
3-12.	Procedure for Measuring Time Interval	3-14
3-13.	Procedure for Measuring Time Interval, with External Clock	3-15
3-14.	Procedure for Totalizing, with the Input Signal Applied to Channel A	3-16
3-15.	Procedure for Totalizing, with the Input Signal Applied to Channel C	3-16
3-16.	Procedure for Totalizing, with the Input Signal Applied to the Converter Channel	3-17
3-17.	Procedure for Heterodyne Frequency Measurement (85 Mc to 500 Mc) when Approximate Input is Known	3-17
3-18.	Procedure for Heterodyne Frequency Measurement (85 Mc to 500 Mc) when Approximate Input Frequency is Unknown	3-18
3-19.	Procedure for Obtaining Standard Frequencies	3-19
3-20.	Procedure for Scaling, with the Input Signal Applied to Channel A	3-19
3-21.	Procedure for Scaling, with the Input Signal Applied to Channel C	3-20
3-22.	Procedure for Scaling, with the Input Signal Applied to the Converter Channel	3-20
3-23.	Procedure for Obtaining Standard 1-Mc Output Signal	3-20
3-24.	Procedure for Turning Counter Off	3-20
	SECTION 4 – TROUBLE SHOOTING	
4-1.	F, T, and S Select Term Symbols	4-2
4-2.	Test Equipment Required for Trouble Shooting	4-5
4-3.	Overall Counter Trouble Shooting	4-5
4-4.	Radio Frequency Oscillator O-1267/O-1267/USM-207 Trouble Shooting	4-16
4-5.	50-Mc Frequency Multiplier and Video Amplifier Trouble Shooting Shooting	4-22
4-6.	A Amplifier Trouble Shooting	4-25
4-7.	B Amplifier Trouble Shooting	4-30
4-8.	C Amplifier Trouble Shooting	4-35
4-9.	10-Mc and 1-Mc Multiplier Trouble Shooting	4-40
4-10.	Scaler Trouble Shooting	4-48
4-11.	Gate Control Trouble Shooting	4-58
4-12.	Count Control Trouble Shooting	4-63
4-13.	Cycle Control Trouble Shooting	4-68
	SECTION 4 – TROUBLE SHOOTING (cont)	
4-14.	Count Decades Trouble Shooting	4-74
4-15.	Readout Digits Decoding	4-89
4-16.	Annunciator Lamp Illumination	4-90
4-17.	Readout Trouble Shooting	4-94
4-18.	Power Supply Trouble Shooting	4-102
	SECTION 5 – MAINTENANCE	
5-1.	Reference Standards Procedure	5-1
5-2.	Test Equipment Required for Reference Standard Procedure	5-3
5-3.	Power Supply Reference Standards Procedure	5-4
5-4.	Radio Frequency Oscillator Reference Standards Procedure	5-6
5-5.	10-Mc and 1-Mc Multiplier Reference Standards Procedure	5-9
5-6.	Count Decades, Readout, and Cycle Control Reference Standards Procedure	5-9
5-7.	Scaler Reference Standards Procedure	5-11
5-8.	A Amplifier Reference Standards Procedure	5-14
5-9.	B and C Amplifiers Reference Standards Procedure	5-16
5-10.	Gate Control Reference Standards Procedure	5-18
5-11.	Count Control Reference Standards Procedure	5-20
5-12.	Electronic Frequency Converter Reference Standards Procedure	5-23
5-13.	Counter Control Settings	5-28
5-14.	Frequency Multiplier A1A6 Adjustments	5-32
5-15.	Function Switch A1S4, External Wire Chart	5-49
5-16.	Function Switch, Internal Wire Chart	5-51
5-17.	Time Base/Std Freq Out Switch A1S3/A1S2, External Wire Chart	5-51
5-18.	Time Base/Std Freq Out Switch A1S3/A1S2, Internal Wire Chart	5-52
5-19.	Power Switch A1S1, External Wire Chart	5-53
5-20.	Power Switch A1S1, Internal Wire Chart	5-54
5-21.	Schematic Diagrams Cross Reference	5-71
	SECTION 6 – PARTS LIST	
6-1A.	Supplementary Parts List	6-1A
6-1.	Maintenance Parts List	6-2
6-2.	List of Manufacturers	6-68

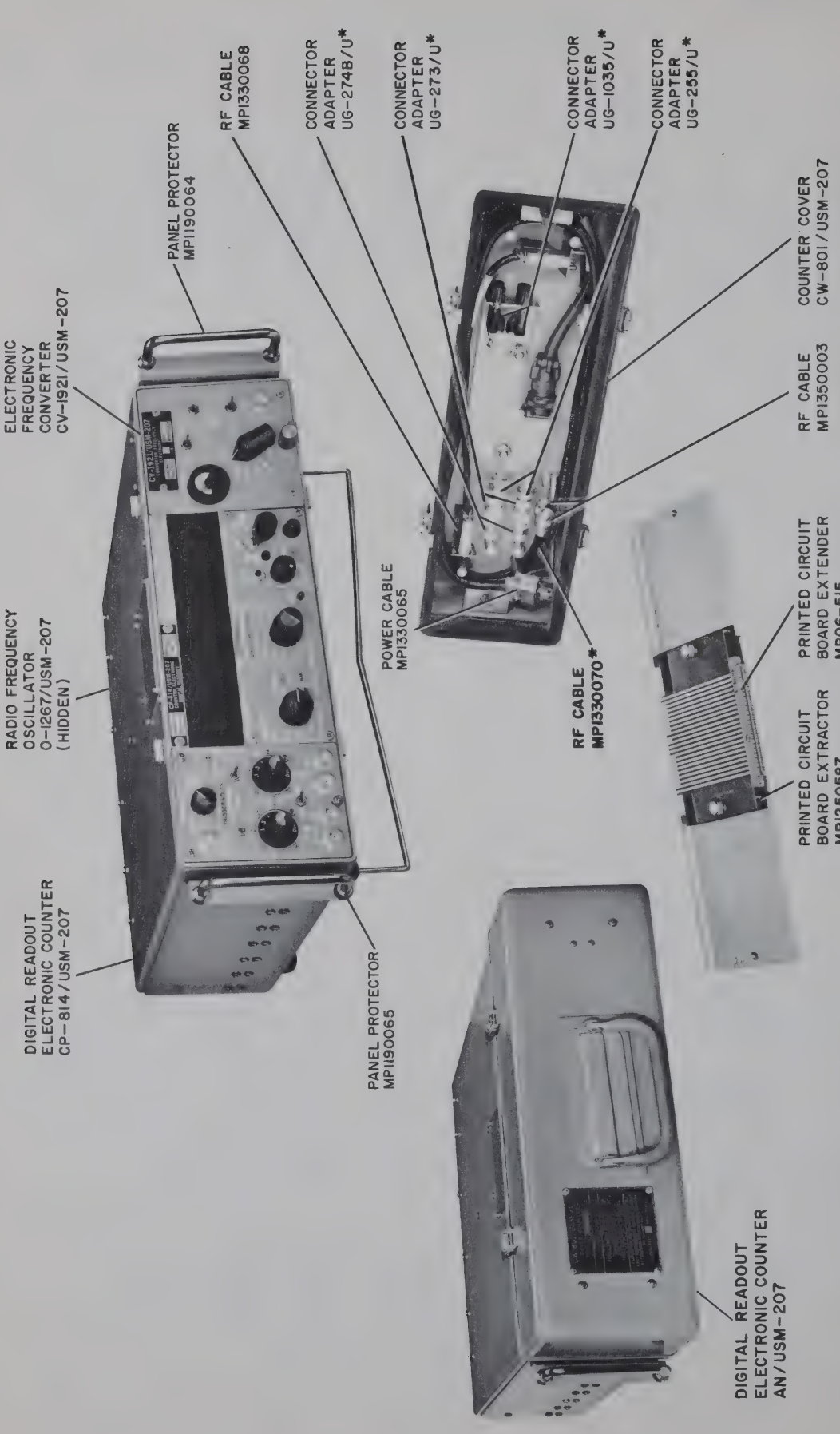

Figure 1-1. Digital Readout Electronic Counter AN/USM-207

SECTION 1

GENERAL INFORMATION

1-1. SCOPE.

This Technical Manual is in effect upon receipt. Extracts from this publication may be made to facilitate the preparation of other Department of Defense publications.

1-2. GENERAL DESCRIPTION.

The AN/USM-207 is a portable, solid-state electronic counter for precisely measuring and displaying on an 8-digit numerical readout the frequency and period of a cyclic electrical signal, the frequency ratio of two signals, the time interval between two points on the same or different signals, and the total number of electrical impulses (totalizing). The counter also provides the following types of output signals:

a. Standard signals from 0.1 cps to 10 mc in decade steps derived from a 1-mc frequency standard, frequency dividers, and a frequency multiplier;

b. Input signals divided in frequency by factors from 10 to 10^8 by a frequency divider;

c. Digital data of the measurement in four-line binary-coded-decimal form with decimal point and control signals for operation of printers, data recorders, or control devices; and

d. A 1-mc output from a frequency standard.

1-3. DESCRIPTION OF UNIT.

The AN/USM-207 consists of a major counter assembly, two plug-in assemblies which install in recesses on the front and rear panel, and a group of accessory cables and connectors stored in the detachable front cover.

a. DIGITAL READOUT ELECTRONIC COUNTER CP-814/USM-207. — The major assembly Digital Readout Electronic Counter CP-814/USM-207 contains the input amplifiers; gate control; display, reset and transfer control; frequency multipliers; time base dividers; decade and readout boards; numerical display tubes; decimal point and units indicators; power supply and regulator; and controls associated with these circuits.

b. RADIO FREQUENCY OSCILLATOR O-1267/USM-207. — This plug-in assembly develops a 1-mc signal and includes its own power supply. The oscillator includes the 1-mc output receptacle which may be used as a source of that frequency when the oscillator is connected to ac power through the basic counter or when connected to the power line independently of the counter. The counter may be operated without the oscillator in totalizing, scaling the input signal, time interval with external clock, and frequency ratio measurements. For other measurements the counter does not require the oscillator when a separate external 100-kc or 1-mc signal is connected. In either of those two situations the oscillator may be left in the counter or removed. The oscillator plugs into the right rear of the counter.

c. ELECTRONIC FREQUENCY CONVERTER CV-1921/USM-207. — This plug-in assembly permits measurement of frequencies up to 500 mc using the heterodyne principle. The unit consists of the broadband amplifier, mixer, multiplier, and controls and indicators associated with these circuits. When measurements other than heterodyne frequency measurement are made, the converter is not required, but need not be removed. The converter also permits the measurement of signals from 35 mc to 100 mc with a greater sensitivity than available with the basic counter. The converter plugs into the right front of the counter.

d. COUNTER COVER CW-801/USM-207. — The CW-801/USM-207 protects the front panel of the counter when not in use and provides storage space for the power cable, printed circuit board extender, two rf cables, six adapters, two tee connectors, two plug-in test cables, and the Operating Manual.

1-4. REFERENCE DATA.

The AN/USM-207 is designed for continuous operation in ambient temperatures from $-28^{\circ}C$ to $+65^{\circ}C$ with relative humidity to 95 percent, except that performance above $50^{\circ}C$ is limited to operation with an external frequency standard. Within this range, the equipment will operate with the performance and accuracy specified below.

a. FREQUENCY MEASUREMENT. —

(1) Range (with converter): 0 cps to 500 mc.

(2) Range (without converter): 0 cps to 100 mc.

(3) Input channel: A (ac coupled), C (ac or dc coupled), or converter (ac coupled).

(4) Input amplitude.

(a) Channel A input: 0.1 to 300 volts rms from 1.0 cps to 10 mc with 6 db/octave roll-off below 10 cps; 0.1 volt rms to 100 volts rms from 10 mc to 100 mc.

(b) Channel C input: 0.1 volt rms to 425 volts rms, from 0.0 cps to 1 mc when dc coupled; ac coupled same as dc coupled except lower limit is 10 cps.

(c) Converter input: 0.01 volt to 10 volts rms from 35 mc to 500 mc.

(5) Input impedance.

(a) Channel A input: 1 megohm ±10% shunted by 30 pf maximum.

(b) Channel C input: 1 megohm ±10% shunted by 30 pf maximum.

(c) Converter input: 50 ohms nominal.

(6) Readout units: In direct frequency measurement, readout is in kc and mc with automatically positioned decimal point; with frequency conversion, readout in mc is added to or subtracted from converter mixing frequency selector switch reading in mc.

(7) Gate times: 1μsec, 10μsec, 100 μsec, 1 ms, 10 ms, 100 ms, 1 second, 10 seconds.

(8) Accuracy: ±1 count ± time-base accuracy.

b. PERIOD MEASUREMENT. —

(1) Input channel: B.

(2) Input range: Dc coupled, 0.0 cps to 1 mc for single period, and 0.0 cps to 300 kc for average of multiple periods; ac coupled, same as dc coupled, except lower limits are 10 cps.

(3) Input amplitude: 0.1 volt rms to 425 volts rms.

(4) Input impedance: 1 megohm ±10% shunted by 30 pf maximum.

(5) Number of periods averaged: 1, 10, 10^2, 10^3, 10^4, and 10^5.

(6) Frequency counted: 1 cps to 10 mc in decade steps for 1 period and 10 period average measurements; 100 cps to 10 mc in decade steps for 10^2 period average measurement; 1 kc to 10 mc in decade steps for 10^3 period average measurement; 10 kc to 10 mc in decade steps for 10^4 period average measurement; 100 kc to 10 mc in decade steps for 10^5 period average measurement.

(7) Readout units: Time of a single period in microseconds, milliseconds, and seconds with automatically positioned decimal point.

(8) Accuracy:

$$\pm \text{ Time-base accuracy}$$

$$\pm \frac{\text{trigger error} \pm \dfrac{\text{frequency (unknown)}}{\text{frequency counted}}}{\text{Number of periods averaged}} .$$

c. FREQUENCY-RATIO MEASUREMENT. —

(1) Numerator input: Same as for frequency input as listed in paragraph a.

(2) Denominator (B) input: Same as for channel B as listed in paragraph b.

(3) Multipliers: 1, 10, 10^2, 10^3, 10^4, 10^5.

(4) Readout: $\dfrac{\text{Numerator input}}{\text{B}}$ with automatically positioned decimal point (no units).

(5) Accuracy: ±1 count ± trigger error of B.

d. TIME-INTERVAL MEASUREMENT. —

(1) Input channels: B (start) and C(stop) inputs may be switched to common signal or to separate signals to provide time interval between points on one or two waveforms, respectively.

(2) Input signals: Same characteristics as listed for period measurement in paragraph b.

(3) Range: 1 μsec to 10^8 seconds.

(4) Time-base frequency counted: 1 cps to 10 mc in decade steps.

(5) Accuracy: ±1 count ± time-base accuracy.

(6) Readout units: Microseconds, milliseconds, or seconds with automatically positioned decimal point.

e. TIME INTERVAL MEASUREMENT, EXTERNAL CLOCK (A/B➞C). —

(1) Input channels: A, B, and C. Channel C input may be switched to common signal or to separate signals to provide count of channel A signal pulses between points on one or two waveforms, respectively.

(2) Range:

$$\frac{\text{1 cps to 100 mc}}{\text{Time B}\rightarrow\text{C} \geq 1\ \mu\text{sec}} .$$

(3) Accuracy: ±1 count.

f. TOTAL COUNT. —

(1) Count range: 0 to 99,999,999.

(2) Maximum counting rate: 100 mc.

(3) Input channel: A, C, or converter.

(4) Input signal characteristics: Same as for frequency measurement as listed in paragraph a.

(5) Start and stop: Front panel control.

g. DISPLAY. —

(1) Number of digits: 8 digits with automatically positioned decimal point.

(2) Units displayed: Microseconds, milliseconds, seconds, megacycles, kilocycles.

(3) Display tubes: In-line biquinary display tubes.

(4) Storage: Power switch selects (a) storage of a displayed count while the next count is being accumulated, and display changes only when new count changes; or (b) continuous display of counting between display periods.

(5) Display time: Adjustable from less than 0.1 second to greater than 5.0 seconds, independent of gate time. Display-time control includes an infinite-display-time position.

h. TIME BASE. —

(1) Source: 1-mc internal crystal oscillator.

(2) Stability: ±1 part in 10^9 in 1000 seconds after 2-hours stabilizing time.

(3) Drift: Not more than ±1 part in 10^8 per week after 48 hours stabilizing time.

(4) Coarse adjustment: Screwdriver-type control varies 1-mc output approximately ±5 parts in 10^7.

(5) Fine adjustment: Screwdriver-type control varies 1-mc output approximately ±500 parts in 10^{10}.

i. REFERENCE FREQUENCY INPUT. —

(1) Frequency: 100 kc or 1 mc.

(2) Amplitude: 0.5 volt rms to 10 volts rms.

(3) Input impedance: 1000 ohms ±10% shunted by 30 pf maximum.

j. TRIGGER ERROR. — Not greater than 0.3 percent for sine-wave signals having at least 40 decibels signal-to-noise ratio and 0.1-volt rms amplitude.

k. STANDARD 1-MC OUTPUT. — Sinusoidal, 1-volt peak-to-peak minimum, 50-ohm output impedance.

l. STANDARD FREQUENCY. —

(1) Outputs: 0.1 cps, 1 cps, 10 cps, 100 cps, 1 kc, 10 kc, 100 kc, 1 mc, 10 mc.

(2) Output impedance: 50 ohms nominal.

(3) Minimum peak amplitude for all outputs: 1.5 volts.

(4) Waveshapes: 0.1 cps through 10 kc, positive rectangular pulses; 100 kc, positive, approximately rectangular pulses; 1 mc, positive square wave; 10 mc, sine wave.

m. SCALED OUTPUTS. —

(1) Frequency: Input signal applied to channel A, channel C, or converter, divided by any decade factor from 10 to 10^8. Input signal is as specified in paragraph a.

(2) Output impedance: 50 ohms nominal.

(3) Minimum peak amplitude for all outputs: 1.15 volts.

(4) Waveshapes: Input divided by 10^8 through 10^3, positive rectangular pulses; input divided by 10^2, positive, approximately rectangular pulses; input divided by 10, positive square waves.

n. PRINTER INTERFACE.—

(1) Each of 8 digits has a corresponding 4-line binary-coded decimal (1-2-4-8); "0" false level, more positive than +9.0 volts; "1" true level, more negative than +0.5 volt; source impedance, approximately 10 k each line.

(2) Decimal-point data is represented by a 4-line binary-coded decimal (1-2-4-8), which corresponds to the 7 decimal point (D-0 through D-6) with D-0 at the right; "0" false level, more positive than +10.0 volts; "1" true level, more negative than +0.5 volt; code line 8 is always false; source impedance, approximately 10 k each line.

(3) Print-command signal at end of counting cycle; negative pulse from a voltage more positive than +11.5 volts to a voltage less positive than +1.5 volts; output impedance approximately 10 k.

(4) Reset inhibit: Connection to ground.

(5) +12 volts at up to 0.1 ampere for coding of printout.

o. RESET.— Pushbutton switch.

p. OPERATING TEMPERATURE.—

(1) 0°C to 50°C when operating with internal time base.

(2) −28°C to +65°C when operating with external reference frequency input used as time base.

q. STORAGE TEMPERATURE.— −62°C to +75°C.

r. RELATIVE HUMIDITY.— 0 to 95 percent.

s. POWER REQUIREMENTS.— 115 vac ±10%, 50/60 cps ±5%, or 400 cps ±10%, 140 watts maximum.

t. WEIGHT.— 51 pounds.

u. DIMENSIONS.— See table 1-1.

1-5. EQUIPMENT SUPPLIED.

The equipment supplied with AN/USM-207 is listed in table 1-1. In addition to the basic counter, two plug-in units, and the cover, it includes accessory cables, connectors, adapters, printed-circuit board extender, printed-circuit board extractor, two panel protectors, two copies of the Operators' Manual, and two copies of the Technical Manual. As shipped, all accessories and one copy of the Operators' Manual are stowed within the cover.

1-6. EQUIPMENT AND PUBLICATIONS REQUIRED BUT NOT SUPPLIED.

A list of all equipments and publications required but not supplied is provided in table 1-2.

1-7. FACTORY OR FIELD CHANGES.

Digital Readout Electronic Counter AN/USM-207 is a new instrument; no factory or field changes have been made as of date of issue.

1-8. PREPARATION FOR RESHIPMENT.

Electronic equipment must be packed with special care. The package in which the equipment is originally shipped is designed to give the instrument full protection from adverse environments and from the shock and vibration incurred in shipment. It should be preserved and utilized for reshipment wherever possible. When preparing the AN/USM-207 for shipment, stow all accessories within the holders inside the cover of the instrument, and lock the cover in place. If the factory-designed package is not in satisfactory condition, pack in accordance with MIL-P-116 and MIL-E-17555E.

TABLE 1-1. EQUIPMENT SUPPLIED

QTY PER EQUIP	NOMENCLATURE		OVER-ALL DIMENSIONS (IN.)			VOLUME (CU FT)	WEIGHT (LB)
	NAME	DESIGNATION	HEIGHT	WIDTH	DEPTH		
1	Counter Cover	CW-801/USM-207	6.20	17.00	4.75	0.29	7
1	Digital Readout Electronic Counter	CP-814/USM-207	6.30	17.00 19.00‡	19.00	1.16	37.75 40.00‡
1	Electronic Frequency Converter	CV-1921/USM-207	4.90	4.75	8.00	0.10	4
1	Radio Frequency Oscillator	O-1267/USM-207	4.75	4.25	8.00	0.09	5
	Digital Readout Electronic	AN/USM-207	6.50	17.00 19.00‡	22.00	1.41	53.75 56.00‡
2*	Connector Adapter	UG-255/U	—	—	—	—	—
2*	Connector Adapter	UG-273/U	—	—	—	—	—
2*	Tee Connector	UG-274B/U	—	—	—	—	—
2*	Connector Adapter	UG-1035/U	—	—	—	—	—

*Part of Counter Cover CW-801/USM-207.
‡With side panels and handles.

TABLE 1-1. (Continued)

QTY PER EQUIP	NOMENCLATURE		OVER-ALL DIMENSIONS (IN.)			VOLUME (CU FT)	WEIGHT (LB)
	NAME	DESIGNATION	HEIGHT	WIDTH	DEPTH		
1*	Electrical Power Cable Assy	MP1330065 (8.10 ft)	—	—	—	—	—
1*	Printed Circuit Board Extender	MP06-515	4.9	6.0	0.31	—	—
1*	Printed Circuit Board Extractor	MP1250587	1.75	5.8	0.125 rod dia	—	—
1*	Radio Frequency Cable Assy	MP1350003 (15 in.)	—	—	—	—	—
1*	Radio Frequency Cable Assy	MP1330068 (13.5 in.)	—	—	—	—	—
2*	Radio Frequency Cable Assy	MP1330070 (8.25 ft)	—	—	—	—	—
2	Operators' Manual (Volume 2) for Digital Readout Electronic Counter AN/USM-207	NAVSHIPS 0969-028-4020	11	8.5	0.2	—	—
2	Technical Manual (Volume 1) for Digital Readout Electronic Counter AN/USM-207	NAVSHIPS 0969-028-4010	11	8.5	1.0	—	—
1	Right-Hand Panel Protector, w/16 Mounting Screws	MP1190064	4.60	18.25	1.18	—	1
1	Left-Hand Panel Protector, w/16 Mounting Screws	MP1190065	4.60	18.25	1.18	—	1

*Part of Counter Cover CW-801/USM-207.

TABLE 1-2. EQUIPMENT AND PUBLICATIONS REQUIRED BUT NOT SUPPLIED

QTY PER EQUIP	NOMENCLATURE		REQUIRED USE	REQUIRED CHARACTERISTICS
	NAME	DESIGNATION		
1	Audio Oscillator	TS-382C/U	Trouble shooting of A, B, and C Amplifiers, and external time-base source in reference standards procedures.	Minimum frequency range: 800 cps to 110 kc. Output amplitude: Continuously variable from less than 1 millivolt rms to 10 volts rms.
1	DC Differential Voltmeter	CCUH-801	Precision measurement of power-supply output voltages.	Voltages: 0 to ±300 volts. Input impedance: 1 megohm minimum. Accuracy: ±1%.
1	DC Power Supply	Harrison Laboratories Model 6226A	Test and repair of 1-mc oscillator.	Output voltage: Adjustable from 20 volts to 30 volts at 1 ampere minimum. Load regulation: 0.02%.

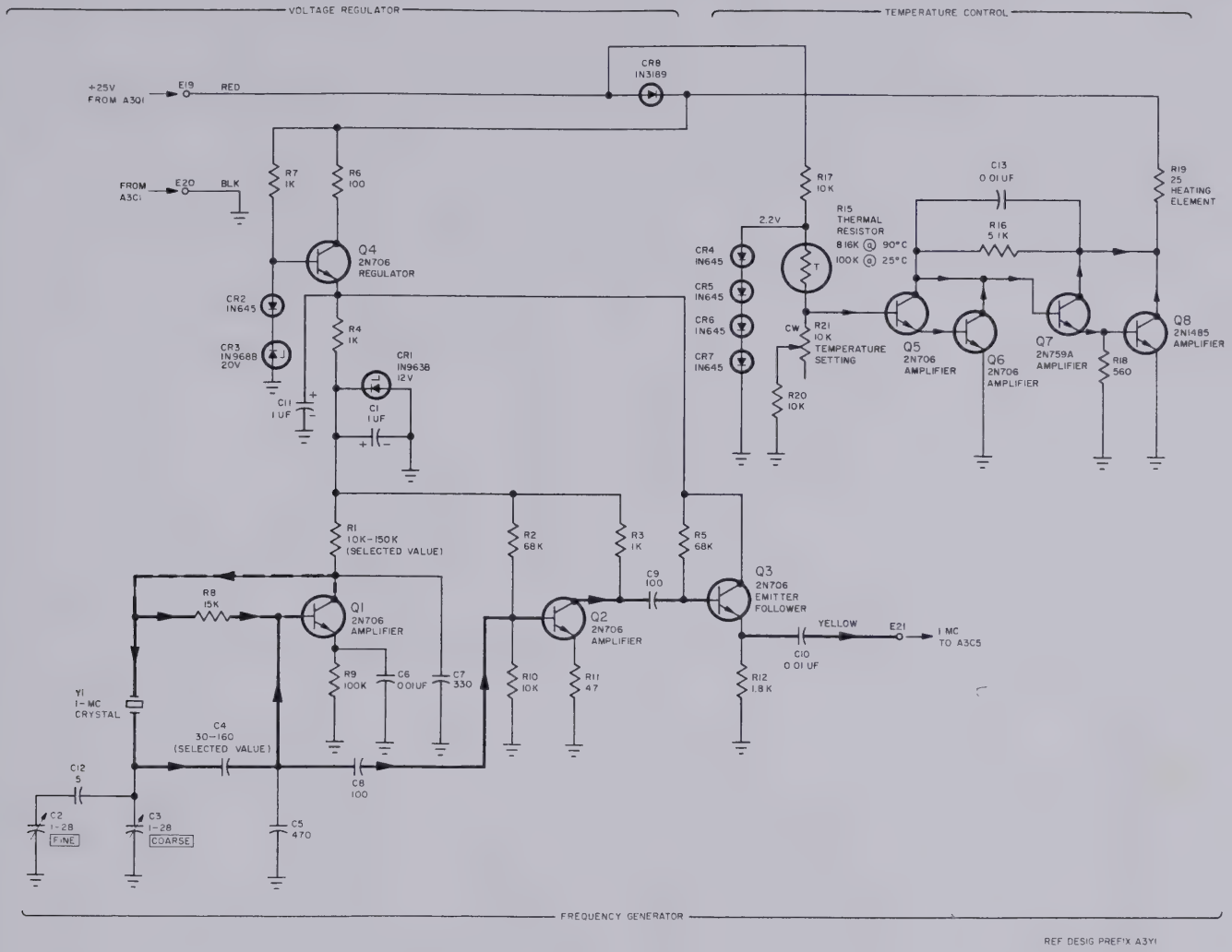

Figure 5-60. Radio Frequency Oscillator, Schematic Diagram (Sheet 2 of 2)

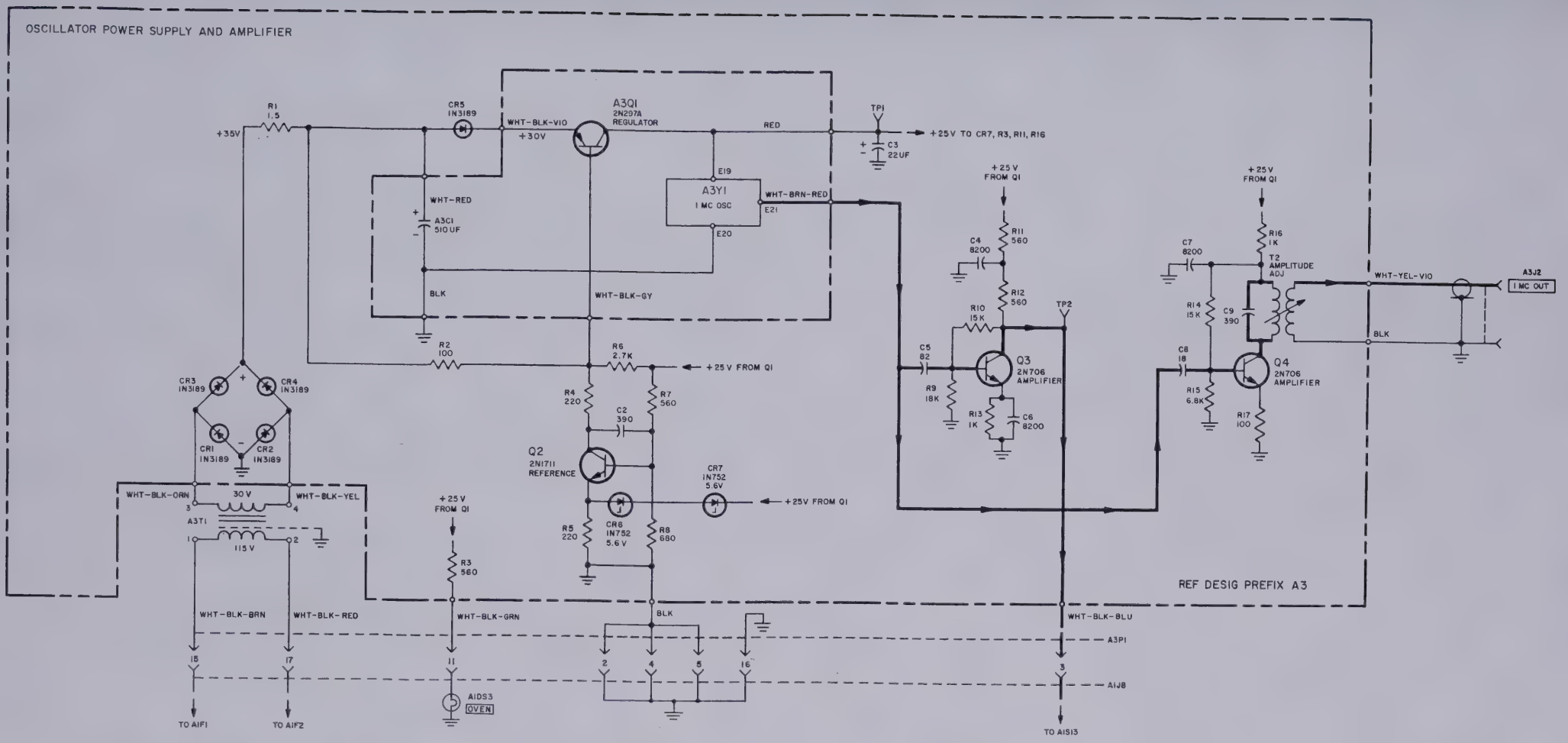
OSCILLATOR POWER SUPPLY AND AMPLIFIER
R1 1.5
+35V
CR5 IN3189
WHT-BLK-VIO
+30V
A3Q1 2N297A REGULATOR
RED
TP1
+25V TO CR7, R3, R11, R16
C3 22UF
E19
A3Y1 1 MC OSC
E21
E20
WHT-BRN-RED
WHT-RED
A3C1 510UF
BLK
WHT-BLK-GY
R2 100
R6 2.7K
+25V FROM Q1
R4 220
R7 560
C2 390
Q2 2N1711 REFERENCE
CR7 IN752 5.6V
CR6 IN752 5.6V
R5 220
R8 680
CR3 IN3189
CR4 IN3189
CR1 IN3189
CR2 IN3189
WHT-BLK-ORN
30 V
WHT-BLK-YEL
A3T1
115 V
R3 560
WHT-BLK-BRN
WHT-BLK-RED
WHT-BLK-GRN
BLK
WHT-BLK-BLU
A3P1
A1J8
AIDS3 OVEN
TO A1F1
TO A1F2
TO A1S13
+25 V FROM Q1
C4 8200
R11 560
R12 560
R10 15K
TP2
C5 82
Q3 2N706 AMPLIFIER
R9 18K
R13 1K
C6 8200
C7 8200
R16 1K
T2 AMPLITUDE ADJ
R14 15K
C9 390
C8 18
Q4 2N706 AMPLIFIER
R15 6.8K
R17 100
WHT-YEL-VIO
BLK
A3J2
1 MC OUT
REF DESIG PREFIX A3

TABLE 1-2. (Continued)

QTY PER EQUIP	NOMENCLATURE		REQUIRED USE	REQUIRED CHARACTERISTICS
	NAME	DESIGNATION		
1	Electronic Multimeter	ME-6A/U	Precision measurement of power-supply ripple voltages.	Voltages: 0 to 10 volts rms. Input impedance: 1 megohm minimum. Accuracy: ±5%.
1	Frequency Error Expander	Motorola Model S1061AR	Temperature setting in the 1-mc oscillator.	Frequency error multiplication: 10^3.
1	Frequency Standard	AN/URQ-9	Radio-frequency-oscillator frequency adjustment.	Frequency: 100 kc or 1 mc. Stability: 5 parts in 10^{10} per day. 1 part in 10^8 per week. Amplitude: 0.5 volt rms minimum into 1,000 ohms.
1	Oscilloscope	AN/USM-140B	Waveform analysis of frequencies below 22 mc and low-frequency voltage measurement.	Minimum frequency range of of vertical channel: Dc to 22 mc. Sweep mode: Internal/external. Internal sweep time range: 0.1 microsecond/cm to 0.1 second/cm minimum.
1	Oscilloscope	Tektronix Model 585 with Type 82 Plug-in	Waveform analysis of frequencies above 22 mc.	Minimum frequency range of vertical channel: Dc to 80 mc. Internal sweep time range: 0.05 microsecond/cm to 10 milliseconds/cm minimum.
1	RF Millivoltmeter	CAQI-411A	Precision voltage measurement over a wide range of frequencies.	Minimum frequency range: 1 mc to 600 mc. Accuracy: 1 mc to 100 mc: ±6%. 100 mc to 600 mc: ±12%.
1	Signal Generator/Frequency Meter	AN/GRM-59 (Gertsch Model SSG-1)	Sensitivity check at precise frequencies.	Frequency standard input: 1 mc, 1 volt peak-to-peak sinusoidal signal from a 50-ohm source impedance. Output frequencies: 5 cps, 10 cps to 1 mc in decade steps; and 10 mc, 20 mc, 50 mc, and 100 mc. Output amplitude: 0.1 volt rms minimum into a 1-megohm load.
1	Variable Transformer	Superior Model 3PN116	Power-supply adjustment.	Current rating: 4 amperes minimum. Input voltage: 115 volts rms ±10%. Output voltage: Adjustable from 0 to 130 volts rms. Output receptacle: Three-terminal.

TABLE 1-2. (Continued)

QTY PER EQUIP	NOMENCLATURE		REQUIRED USE	REQUIRED CHARACTERISTICS
	NAME	DESIGNATION		
1	Time-Mark Generator	Tektronix Type 180A	Time-interval and frequency-ratio reference standards checks.	Trigger output: Pulse with rise time of less than 25 nanoseconds from 0 to 200 millivolts minimum into 1 megohm. Marker output: 100 kc or 1 mc; 0.5 volt to 10 volts rms into 1000-ohm load.
1	Amplifier	Hewlett-Packard Model 467A	Increase amplitude of 1-mc reference signal for driving signal generator in reference-standard tests.	Provide a 1-mc output of 1 volt rms minimum into a 50-ohm load from a 1-volt peak-to-peak input, 50-ohm source.
1	VHF Signal Generator	Hewlett-Packard Model 608C	Alignment of electronic frequency converter.	Minimum frequency range: 100 mc to 480 mc. Amplitude: 0 to 0.5 volt rms adjustable in calibrated steps.
1	UHF Signal Generator	Hewlett-Packard Model 612A	Alignment of electronic frequency converter.	Minimum frequency range: 450 mc to 650 mc. Amplitude: 0 to 0.5 volt rms adjustable in calibrated steps.
1	Wattmeter	Hickock Model 900C	Power-supply adjustment.	Power range: 0 to 200 watts minimum. Voltage range: 0 to 150 volts minimum.
2	Binding-Post Terminal Adapter	Pomona Electronics Model 1269	Facilitates connections to amplifier used in reference-standards tests.	
1	BNC Probe Adapter	Tektronix Model 013-054	Faciliates probing of signals terminated in a BNC connector.	
2	Connector Adapter	UG-201/U	Facilitates connection between uhf and vhf signal generators and counter.	
1	50-Ohm BNC Termination	Tektronix Model 011-049	Proper impedance termination for counter output signals.	
1	Instruction Book for Audio Oscillator TS-382C/U	T.O. No. 16-35TS382-4		
1	Instruction Book for Dc Differential Voltmeter CCUH-801	Fluke commercial manual for Model 801B		
1	Instruction Book for Dc Power Supply 6226A	Harrison Laboratories commercial manual for Model 6226A.		

TABLE 1-2. (Continued)

QTY PER EQUIP	NOMENCLATURE		REQUIRED USE	REQUIRED CHARACTERISTICS
	NAME	DESIGNATION		
1	Instruction Book for Electronic Multimeter ME-6A/U	NAVSHIPS 91269		
1	Instruction Book for Frequency Error Expander S1061AR	Motorola commercial manual for Model S1061AR		
1	Instruction Book for Frequency Standard AN/URQ-9	NAVSHIPS 93806A		
1	Instruction Book for Oscilloscope AN/USM-140B	NAVSHIPS 95706		
1	Instruction Book for Oscilloscope Tektronix Model 585	Tektronix commercial manual for Model 585		
1	Instruction Book for RF Millivoltmeter, CAQI-411A	Hewlett-Packard commercial manual for Model 411A		
1	Instruction Book for Signal Generator/Frequency Meter Model SSG-1	Gertsch for Model SSG-1		
1	Instruction Book for VHf Signal Generator Hewlett-Packard Model 608C	Hewlett-Packard commercial manual for Model 608C		
1	Instruction Book for Uhf Signal Generator Hewlett-Packard Model 612A	Hewlett-Packard commercial manual for Model 612A		
1	Operating Instruction Chart for Frequency Standard AN/URQ-9	NAVSHIPS 93806-21		
1	Instruction Book for Amplifier Hewlett-Packard Model 467A	Hewlett-Packard commercial manual for Model 467A		
1	Instruction Book for Time-Mark Generator Tektronix Type 180A	Tektronix commercial manual for Type 180A		

SECTION 2

INSTALLATION

2-1. UNPACKING AND HANDLING.

The counter is shipped with the radio frequency oscillator and electronic frequency converter installed. All accessories supplied with the counter are installed within the front cover prior to shipment. Handle the instrument carefully when removing it from the shipping container.

2-2. POWER REQUIREMENTS.

The counter is designed to operate from 115 volts ±10 percent, single-phase ac, at 50 cps ±5 percent, 60 cps ±5 percent, or 400 cps ±10 percent. Operation at frequencies or voltages other than these should not be attempted. Total power demand does not exceed 140 watts.

2-3. SITE SELECTION.

The counter is a portable test instrument designed to operate satisfactorily over a wide range of environments. It will find applications in airborne, shipboard, and land-based electronic maintenance and research facilities.

2-4. INSTALLATION REQUIREMENTS.

Adequate air circulation should be provided to prevent damage to the instrument. Care must be taken to allow a minimum of 6 inches of clear space behind the cabinet to permit proper air flow through the counter. Applications using the PRINTER connector on the rear panel may require more than the 6-inch minimum clearance.

2-5. CABLE ASSEMBLIES.

The only cable required for installation of the equipment is the power cable that is supplied. All cables and connectors supplied for the operation and maintenance of the counter are stored within the front cover of the cabinet as follows:

a. POWER CABLE. — This is a three-conductor cable, one end of which terminates in a plug that mates with the power connector on the rear panel of the instrument. The other end of the power cable terminates in a polarized three-contact male plug. One contact of the plug is an offset pin which grounds the instrument chassis when the plug is used with a grounded three-terminal receptacle. The plug can be modified for use with a two-terminal receptacle according to the following procedure:

(1) Loosen the screw on the offset pin, and remove the green (ground) lead.

(2) Connect the green lead to ground, or connect the grounding post (next to the power connector on the counter on later units) to an external ground.

(3) Insert plug directly into the receptacle. The offset pin will fold back automatically.

WARNING

If the green lead on the plug or grounding post is not attached to ground when a two-terminal receptacle is used, the instrument panel and cabinet may assume an off-ground potential and present a hazard to operating personnel.

b. RF CABLES. — Two rf cables, consisting of 8 feet of type RG-58C/U cable terminated at each end with a BNC connector type UG-88E/U are supplied with the instrument. These cables connect any of the counter inputs directly to a BNC-terminated signal source.

c. ADAPTERS AND TEE CONNECTORS. — The following adapters and tee connectors are supplied with the instrument:

(1) One plug-in printed circuit board test extender. The extender allows the plug-in printed circuit boards to be raised to a convenient height for trouble shooting and maintenance.

(2) Two BNC male to UHF female type UG-255/U Adapters for making connections to equipment having UHF connectors.

(3) Two BNC female to UHF male type UG-273/U Adapters for making connections to equipment having UHF connectors.

(4) Two type UG-1035/U Adapters with binding posts connected to BNC male connectors for making connection at the counter inputs to test leads terminated in banana connectors.

(5) Two BNC tee connectors type UG-274B/U for making multiple input connections to equipment having BNC connectors.

(6) One plug-in test cable consisting of type RG-58C/U cable terminated with male and female BNC connectors. This cable is to be connected when operating the electronic frequency converter outside of the instrument during maintenance.

(7) One 12-conductor plug-in test cable terminated at one end with a 15-contact male connector and at the other with a 15-contact female connector. This cable is to be connected when operating the rf oscillator or frequency converter outside of the instrument during maintenance.

d. PRINTER CABLE. — The cable required for connection to the PRINTER connector on the rear of the instrument is not supplied. To use the binary-code-decimal and control data available at the PRINTER connector, a suitable mating cable must be constructed. To construct a mating cable, use a type MS3106R-36-8S connector and 22-gauge, nylon-covered hook-up wire appropriately color-coded. Pin connections are as listed in table 2-1.

e. CONNECTOR COVERS. — Two internally threaded covers, attached to the rear panel with chains, protect the PRINTER and POWER connectors when not in use.

TABLE 2-1. CONNECTIONS TO PRINTER CONNECTOR

FUNCTION		PRINTER CONNECTOR PIN NO.
DIGIT	WEIGHT	
10^0 (units) (right-end)	1 2 4 8	O J I G
10^1 (tens)	1 2 4 8	u p n k
10^2 (hundreds)	1 2 4 8	Y U T M
10^3 (thousands)	1 2 4 8	F E D A
10^4 (ten thousands)	1 2 4 8	z w t r
10^5 (hundred thousands)	1 2 4 8	h e d Z
10^6 (millions)	1 2 4 8	P L K H
10^7 (ten millions)	1 2 4 8	j a V R
Decimal Point	1 2 4 8	g c b X
Inhibit signal input: connect to ground through external contacts to prevent counter reset during printout.		s
+12 volts at up to 0.1 ampere: can be used to code printout.		f
Print command output: negative pulse of at least 10 volts amplitude from a voltage more positive than 11.5 volts indicates that completed measurement is ready for printout.		v
Ground.		m

2-6. PRINTED CIRCUIT BOARD EXTRACTOR.

An extractor for removing the plug-in printed circuit boards is supplied with the instrument. The tool is stored under the test extender in the instrument cover.

2-7. INSPECTION AND ADJUSTMENT.

Inspect the counter upon receipt for any damage which may have occurred in transit. Check that there are no loose or broken control knobs, bent or broken connectors, scratches or cracks on the readout window, and dents or scratches on the cabinet and panel surfaces. Inspect the air filter to be sure it is not damaged. Apply power to the counter and check for operation of the fan. Operate the counter in the test function as described in table 3-4. All internal adjustments are initially made at the factory; the instrument is ready for use as received.

2-8. INTERFERENCE REDUCTION.

The counter is designed to meet minimum radio interference requirements only when both the rf oscillator and frequency converter are installed.

2-9. FITTING OF COUNTER COVER.

To adjust the tension latches on the counter cover, proceed as follows:

a. Remove all external connections to the counter.

b. Set counter on work bench with the front panel facing up, so that the counter is resting on the four rubber legs on the rear panel.

c. Place cover on counter and fasten with the four latches.

d. With a screwdriver turn the setscrew on each latch an equal amount clockwise to obtain a snug fit.

2-10. INSTALLING THE FRONT-PANEL PROTECTORS.

The front-panel protectors are shipped in a separate package together with the long pan-head mounting screws, and may be installed in the field according to the following procedure:

a. Remove the 16 short pan-head screws from either side of the counter. Do not remove the four flat-head screws.

b. Install the left-hand protector MP1190065 on the left side of counter with 16 long pan-head screws.

c. Install the other protector MP1190064 on the right side of the counter with the remaining 16 long pan-head screws.

SECTION 3

OPERATION

Operation, Section 3, is included as Volume 2 of this Technical Manual. Volume 2 is identified as "Operators' Manual for Digital Readout Electronic Counter AN/USM-207," NAVSHIPS 0969-028-4020.

SECTION 4

TROUBLE SHOOTING

4-1. LOGICAL TROUBLE SHOOTING.

This section contains information useful in quickly determining and correcting the cause of equipment malfunction or performance degradation. Trouble shooting is based on the following six logical steps:

a. SYMPTOM RECOGNITION. — This is the first step in the trouble-shooting procedure; it requires a complete knowledge and understanding of equipment operating characteristics. Trouble may arise which is not a direct result of a faulty component. To evaluate such troubles requires considerable experience on the part of the technician. The reference standards procedures of Section 5 point out most "not so apparent" malfunctions.

b. SYMPTOM ELABORATION. — Once an equipment trouble has been recognized, trace it as close as possible to its point of origin. Much information can be gained from operating the counter. Note the normal response of the counter to all control settings. Then, when the readout provides an unusual indication, it serves as a symptom for localizing the trouble.

c. LISTING PROBABLE FAULTY FUNCTION. — A complete understanding of the equipment operating principles is especially important at this phase of the trouble-shooting procedure. With all information about the problem in mind, formulate a number of "logical choices" as to the cause and likely location of the malfunction. Confine each choice to a functional section of the equipment as shown in figure 4-1.

d. LOCALIZING THE FAULTY FUNCTION. — In performing this phase of the trouble-shooting procedure, review the choices of possible equipment faults. Conduct tests to determine the area in which the problem lies in an efficient order. Refer to the functional section trouble-shooting descriptions and servicing block diagrams and isolate the problem to a single functional section.

e. LOCALIZING TROUBLE TO THE CIRCUIT. — Once the problem has been isolated to a single functional section, make additional "logical choices" as to which circuit is at fault. Refer to the signal flow and test information contained on the functional and servicing block diagrams in making these "logical choices." Also, refer to the detailed schematic diagrams in Section 5 to obtain information for help in localizing the faulty circuit.

f. FAILURE ANALYSIS. — When the faulty circuit or part has been isolated, review the procedures followed up to this point to determine why the fault affected the equipment in the manner it did. This review is necessary to make certain that the fault discovered is the cause and not the result of the malfunction.

g. TEST POINTS. — Significant test points throughout the equipment are identified on functional and servicing block diagrams and on parts-location illustrations by use of test-point symbols. Star test-point symbols are assigned to those test points which are used to isolate functional sections or circuit groups in trouble shooting. Circle test-point symbols are assigned to those test points which are helpful in isolating faulty circuits. Circle and star symbols are not marked on the equipment. Standoff-terminal test points have TP reference designators marked on the equipment and on the schematic diagram.

4-2. OVERALL FUNCTIONAL DESCRIPTION.

Figure 4-1 is the overall functional block diagram of the counter. The individual functional sections are constructed on one or more plug-in printed circuit boards. Any of these printed circuit boards may be removed from the counter for purposes of adjustment, trouble shooting, and replacement of parts. Basic operation of the counter is shown in figure 4-2. An overall logic diagram is provided in figure 4-3. To make a measurement, requires two types of information: a count signal, and a gate control signal. These two signals may be generated within the instrument or they may be supplied from outside sources. The type of measurement the counter will make depends upon the relationship of these two signals. However, in any function the instrument counts the count signal for a period of time determined by the gate control signal. Routing of these signals within the instrument is accomplished by logic circuits. These logic circuits are controlled by the operator by means of the front panel FUNCTION, time base, and SENSITIVITY switches. The output of each switch is a select voltage which operates one or more logic circuits in the counter. These voltages are referred to as F, T, and S select terms and are defined in table 4-1.

a. FUNCTIONAL SECTIONS. — The following are the functional sections of the counter:

(1) Radio Frequency Oscillator O-1267/USM-207.
(2) Electronic Frequency Converter CV-1921/USM-207.
(3) A Amplifier.
(4) B Amplifier.
(5) C Amplifier.
(6) 10 Mc and 1 Mc Multipliers.
(7) Scaler.
(8) Gate Control.
(9) Count Control.
(10) Cycle Control.
(11) Count Decades.
(12) Readout.
(13) Power Supply.

b. RADIO FREQUENCY OSCILLATOR O-1267/USM-207. — The radio frequency oscillator generates a signal of precise frequency for use throughout the counter. It is a separate plug-in assembly containing its own power supply and may be used to provide a precise 1-mc standard signal for use outside the instrument.

c. ELECTRONIC FREQUENCY CONVERTER CV-1921/USM-207. — The electronic frequency converter accepts radio frequencies between 100 mc and

500 mc and converts them to radio frequencies between 5 mc and 100 mc for measurement by the basic counter. It is a separate plug-in assembly and must be installed in or connected to the basic counter for operation.

d. A AMPLIFIER. — The A amplifier amplifies the A input signal or the output of the converter for use throughout the counter.

e. B AMPLIFIER. — The B amplifier amplifies and shapes the B input signal for use throughout the counter.

f. C AMPLIFIER. — The C amplifier amplifies and shapes the C input signal for use throughout the counter.

g. 10 MC AND 1 MC MULTIPLIER. — The 10 mc and 1 mc multiplier multiplies the frequency and shapes the signal generated by the radio frequency oscillator. It provides precise timing signals to the various functional sections of the basic counter and to the frequency converter.

h. SCALER. — The scaler consists of a series of decade dividers and gating systems which provide divided standard frequencies and control signals. These signals are used throughout the counter as either count or control signals depending on the type of measurement the instrument is making.

i. GATE CONTROL. — The gate control generates the gate control signal. This signal determines the length of time that the count decades will count the count signal.

j. COUNT CONTROL. — The count control provides the proper count signal to the count decades, as selected by the setting of the front-panel switches.

k. CYCLE CONTROL. — The cycle control produces all signals necessary to display the measurement results on the readout and to recycle the counter.

l. COUNT DECADES. — The count decades count the count signal when permitted to do so by the gate control. The result of their counting becomes the final reading displayed by the readout at the end of each measurement.

m. READOUT. The readout receives binary-coded-decimal data from the count decades, decodes this data into decimal form and drives the readout indicator tubes. The readout also contains memory circuits which function when the counter is operated in the STORE mode.

n. POWER SUPPLY. — The power supply supplies all dc power required by the basic instrument and the converter.

TABLE 4-1. F, T, AND S SELECT TERM SYMBOLS

F SELECT TERMS	
FUNCTION SWITCH POSITION	F SYMBOL
PERIOD B x 1	F1
PERIOD B x 10	F2
PERIOD B x 10^2	F3
PERIOD B x 10^3	F4
PERIOD B x 10^4	F5
PERIOD B x 10^5	F6
TIME B ⟶ C	F7
FREQ	F8
SCALE A	F9
MANUAL STOP	F10
MANUAL START	F11
T SELECT TERMS	
TIME BASE SWITCH POSTION	T SYMBOL
10^{-1}	T1
1	T2
10_2	T3
10^2	T4
10^3	T5
10^4	T6
10^5	T7
10^6	T8
10^7	T9
10^8 (RATIO A/B x M)	T10
S SELECT TERMS	
SENSITIVITY SWITCH POSITION	S SYMBOL
.1 V	S1
1 V	S1
10 V	S1
100 V	S1
PLUG-IN	S1
TEST	S2
FREQ.C	S3

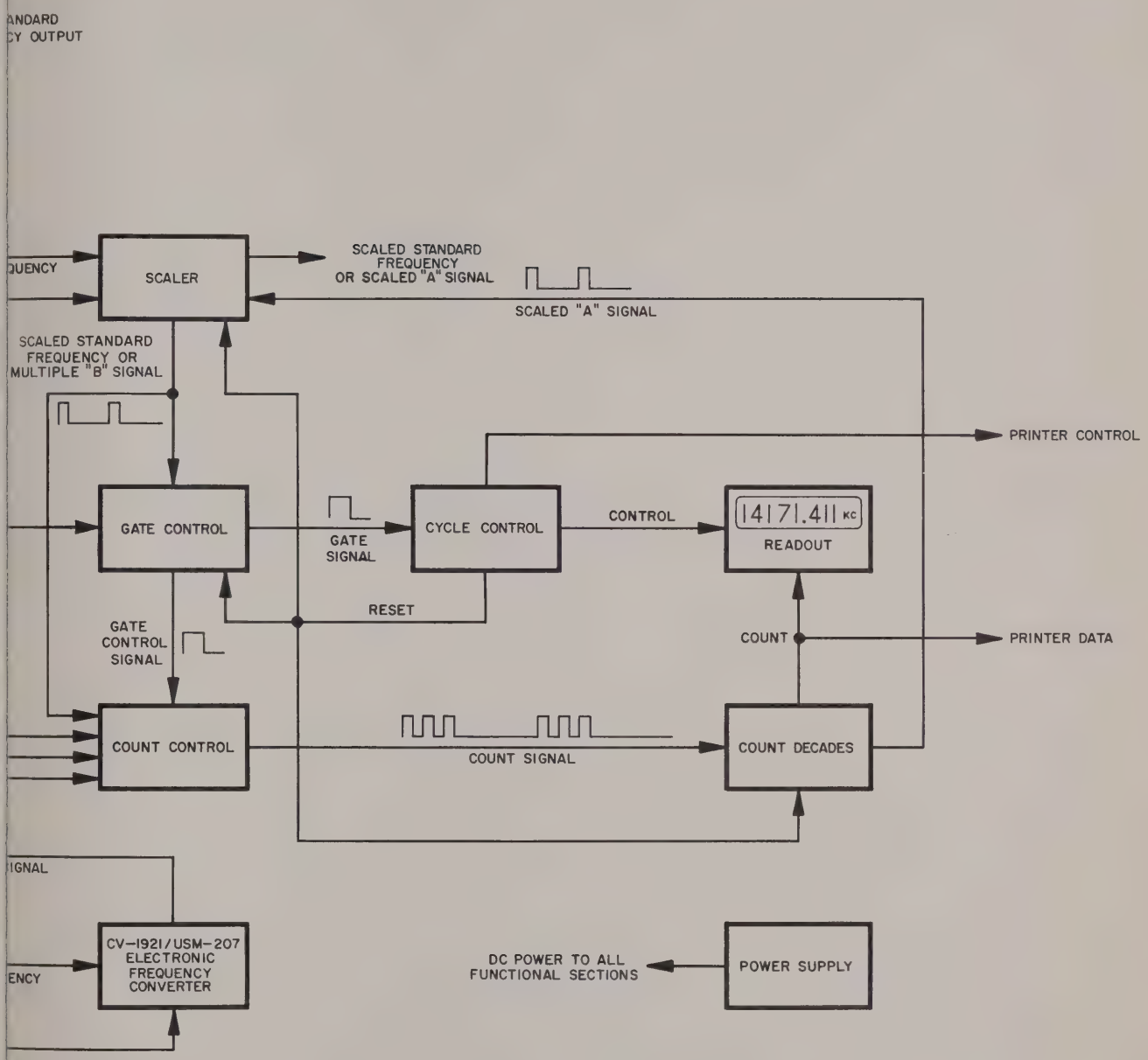

Figure 4-1. Digital Readout Electronic Counter AN/USM-207 Overall Functional Block Diagram

500 mc and converts them to radio frequencies between 5 mc and 100 mc for measurement by the basic counter. It is a separate plug-in assembly and must be installed in or connected to the basic counter for operation.

d. A AMPLIFIER. — The A amplifier amplifies the A input signal or the output of the converter for use throughout the counter.

e. B AMPLIFIER. — The B amplifier amplifies and shapes the B input signal for use throughout the counter.

f. C AMPLIFIER. — The C amplifier amplifies and shapes the C input signal for use throughout the counter.

g. 10 MC AND 1 MC MULTIPLIER. — The 10 mc and 1 mc multiplier multiplies the frequency and shapes the signal generated by the radio frequency oscillator. It provides precise timing signals to the various functional sections of the basic counter and to the frequency converter.

h. SCALER. — The scaler consists of a series of decade dividers and gating systems which provide divided standard frequencies and control signals. These signals are used throughout the counter as either count or control signals depending on the type of measurement the instrument is making.

i. GATE CONTROL. — The gate control generates the gate control signal. This signal determines the length of time that the count decades will count the count signal.

j. COUNT CONTROL. — The count control provides the proper count signal to the count decades, as selected by the setting of the front-panel switches.

k. CYCLE CONTROL. — The cycle control produces all signals necessary to display the measurement results on the readout and to recycle the counter.

l. COUNT DECADES. — The count decades count the count signal when permitted to do so by the gate control. The result of their counting becomes the final reading displayed by the readout at the end of each measurement.

m. READOUT. The readout receives binary-coded-decimal data from the count decades, decodes this data into decimal form and drives the readout indicator tubes. The readout also contains memory circuits which function when the counter is operated in the STORE mode.

n. POWER SUPPLY. — The power supply supplies all dc power required by the basic instrument and the converter.

TABLE 4-1. F, T, AND S SELECT TERM SYMBOLS

F SELECT TERMS	
FUNCTION SWITCH POSITION	F SYMBOL
PERIOD B x 1	F1
PERIOD B x 10	F2
PERIOD B x 10^2	F3
PERIOD B x 10^3	F4
PERIOD B x 10^4	F5
PERIOD B x 10^5	F6
TIME B ⟶ C	F7
FREQ	F8
SCALE A	F9
MANUAL STOP	F10
MANUAL START	F11
T SELECT TERMS	
TIME BASE SWITCH POSTION	T SYMBOL
10^{-1}	T1
1	T2
10_2	T3
10^2	T4
10^3	T5
10^4	T6
10^5	T7
10^6	T8
10^7	T9
10^8 (RATIO A/B x M)	T10
S SELECT TERMS	
SENSITIVITY SWITCH POSITION	S SYMBOL
.1 V	S1
1 V	S1
10 V	S1
100 V	S1
PLUG-IN	S1
TEST	S2
FREQ.C	S3

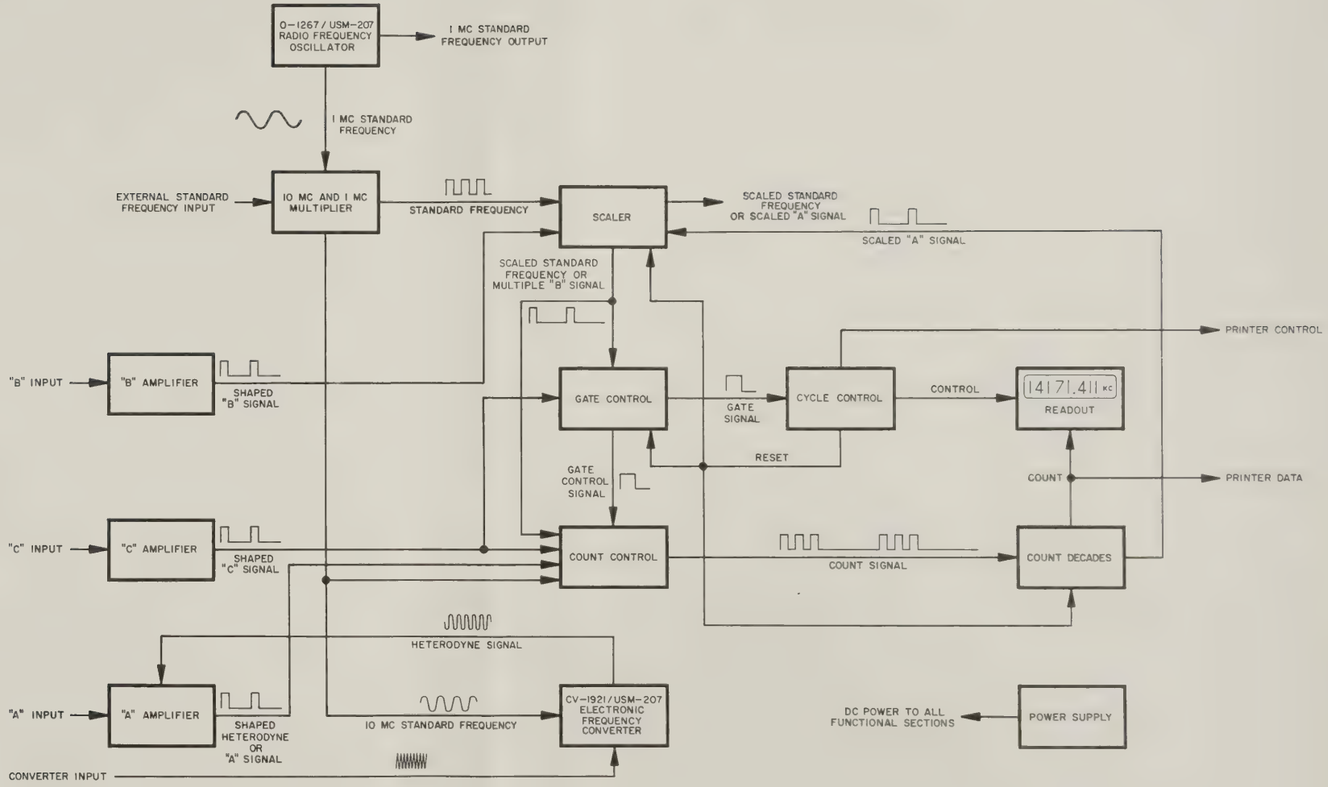

Figure 4-1. Digital Readout Electronic Counter AN/USM-207 Overall Functional Block Diagram

4-3. OVERALL COUNTER TROUBLE SHOOTING.

Before attempting any trouble-shooting procedure, make an overall preliminary check of the equipment. Look for external defects such as a dirty air filter, broken or loose controls, damaged readout indicators or damaged input connectors. Remove the top cover per paragraph 5-2; then check for broken or bulging components, loose readout indicators and damaged wiring.

a. TEST EQUIPMENT AND SPECIAL TOOLS. — Test equipment required for trouble shooting is listed in table 4-2. A printed circuit board extractor is supplied with the instrument. Figure 5-1 shows the correct use of this tool.

b. TROUBLE-SHOOTING PROCEDURE. — Procedure for trouble shooting the overall counter is given in table 4-3. This procedure utilizes readout indications in response to particular control settings as a means of localizing trouble to a single or group of functional sections. Where improper presentations are obtained, table 4-3 directs the technician to the probable functional section or sections of the counter which deserve a more detailed check. Further checking can then be performed by referring to the trouble-shooting text and functional and servicing block diagram for the functional section concerned. Test voltages and detailed trouble-shooting tables are provided for each functional section.

c. SERVICING BLOCK DIAGRAM. — A servicing block diagram for the overall counter is shown in figure 4-2. This diagram shows all the signals and select terms supplied to and taken from each functional section, and the development of the select terms by the various control switches.

TABLE 4-2. TEST EQUIPMENT REQUIRED FOR TROUBLE SHOOTING

DESIGNATION	NAME
ME-6A/U	Electronic Multimeter
CCUH-801	Dc Differential Voltmeter
AN/USM-140B	Oscilloscope
Tektronix Model 585 with Type 82	Oscilloscope Plug-in
Hewlett Packard Model 608C	Vhf Signal Generator
Hewlett Packard Model 612A	Uhf Signal Generator
TS-382C/U	Audio Oscillator

TABLE 4-3. OVERALL COUNTER TROUBLE SHOOTING

STEP	ACTION	RESULTS	NEXT STEP
1	Connect counter to power source, set POWER switch to TRACK and REF FREQ 100 KC or 1 MC switch to INT.	POWER lamp, OVEN lamp, and all readout indicators, light, and fan operates.	3
		POWER lamp, OVEN lamp, and all readout indicators do not light, and fan does not operate.	2
		If POWER lamp and all readout indicators light, fan operates but OVEN lamp does not light, check radio frequency oscillator functional section.	
		If POWER lamp, OVEN lamp, and all readout indicators light, but fan does not operate, check fan motor.	
		If POWER lamp and OVEN lamp light, fan operates, but no readout indicators light, check power supply functional section.	
		If POWER lamp and OVEN lamp light, fan operates, and some but not all readout indicators light, check readout functional section.	

TABLE 4-3. (Continued)

STEP	ACTION	RESULTS	NEXT STEP
2	Check both fuses behind frequency converter plug-in.	If both fuses are good, check power source and AILFI.	
		If either or both fuses are bad, replace them and check power supply functional section.	
3	Set FUNCTION switch to TIME B⟶C, mode selector switch to COM, and both SLOPE switches to +. Press RESET switch. Turn B TRIGGER VOLTS control clockwise.	GATE lamp lights.	4
		If GATE lamp does not light, check B amplifier and cycle control functional sections.	
4	Rotate time-base switch clockwise from 1 through 10^7, one position at a time. In each position, observe readout indicator which advances from 0 through 9 at a 1-cps rate.	All readout indicators advance numerically from 0 through 9.	5
		If none of the readout indicators change display as the time-base switch is rotated, check the radio frequency oscillator, 10-mc and 1-mc multiplier, scaler, count control, and count decade functional sections.	
		If some but not all readout indicators change display in numerical order, check the count decade and readout functional sections.	
		If more than one number lights at a time on any readout indicator, check the readout functional section.	
5	Turn C TRIGGER VOLTS control clockwise.	GATE lamp goes out.	6
		If GATE lamp does not go out, check C amplifier functional section.	
6	Set SENSITIVITY switch to .1 V and the time-base switch to 1. Apply a 100-mv rms sine wave of approximately 1000 cps to the FREQ.A connector.	Frequency of input signal is displayed on the readout.	7
		If frequency of input signal is not displayed on the readout, check A amplifier and count control functional sections.	
7	Set POWER switch to STORE.	Number displayed on readout does not change when GATE lamp is on.	8
		If number displayed on any readout indicator changes when GATE lamp is on, check cycle control and readout functional sections.	
8	Set SENSITIVITY switch to PLUG-IN, and both converter attenuator switches on the frequency converter to the left (.1 V max) position. Operate the converter in all frequency ranges with 100-mv input signals applied to the INPUT connector.	If readout displays correct indications all major circuits within the counter are operating correctly.	9
		If readout displays incorrect indications, check converter and count functional sections.	

TABLE 4-3. (Continued)

STEP	ACTION	RESULTS	NEXT STEP
	Note The remaining steps utilize the self-test function of the counter and may be performed as routine operating procedure at any time.		
9	Set FUNCTION switch to FREQ, SENSITIVITY switch to TEST and time-base switch to 10^6.	00000010. MC is displayed on readout and gate lamp cycles on and off.	10
		If 00000010. MC is displayed on readout but gate lamp does not cycle on and off, check cycle control functional section.	
		If wrong number is displayed on the readout but gate lamp cycles on and off, check count control and count decade functional sections.	
10	Set time-base switch to 10^5.	0000010. 0 MC is displayed on readout.	11
		If wrong number is displayed on the readout, check count decade functional section.	
11	Set time-base switch to 10^4.	000010. 00 MC is displayed on readout.	12
		If wrong number is displayed on readout, check count decade functional section.	
12	Set time-base switch to 10^3.	00010000. KC is displayed on readout.	13
		If wrong number is displayed on readout, check count decade functional section.	
13	Set time-base switch to 10^2.	0010000. 0 KC is displayed on readout.	14
		If wrong number is displayed on readout, check count decade functional section.	
14	Set time-base switch to 10.	010000. 00 KC is displayed on readout.	15
		If wrong number is displayed on readout, check count decade functional section.	
15	Set time-base switch to 10^{-1}.	If 10000000 CPS is displayed on readout, all major circuits within the counter are operating correctly.	
		If wrong number is displayed on readout, check count decade functional section.	

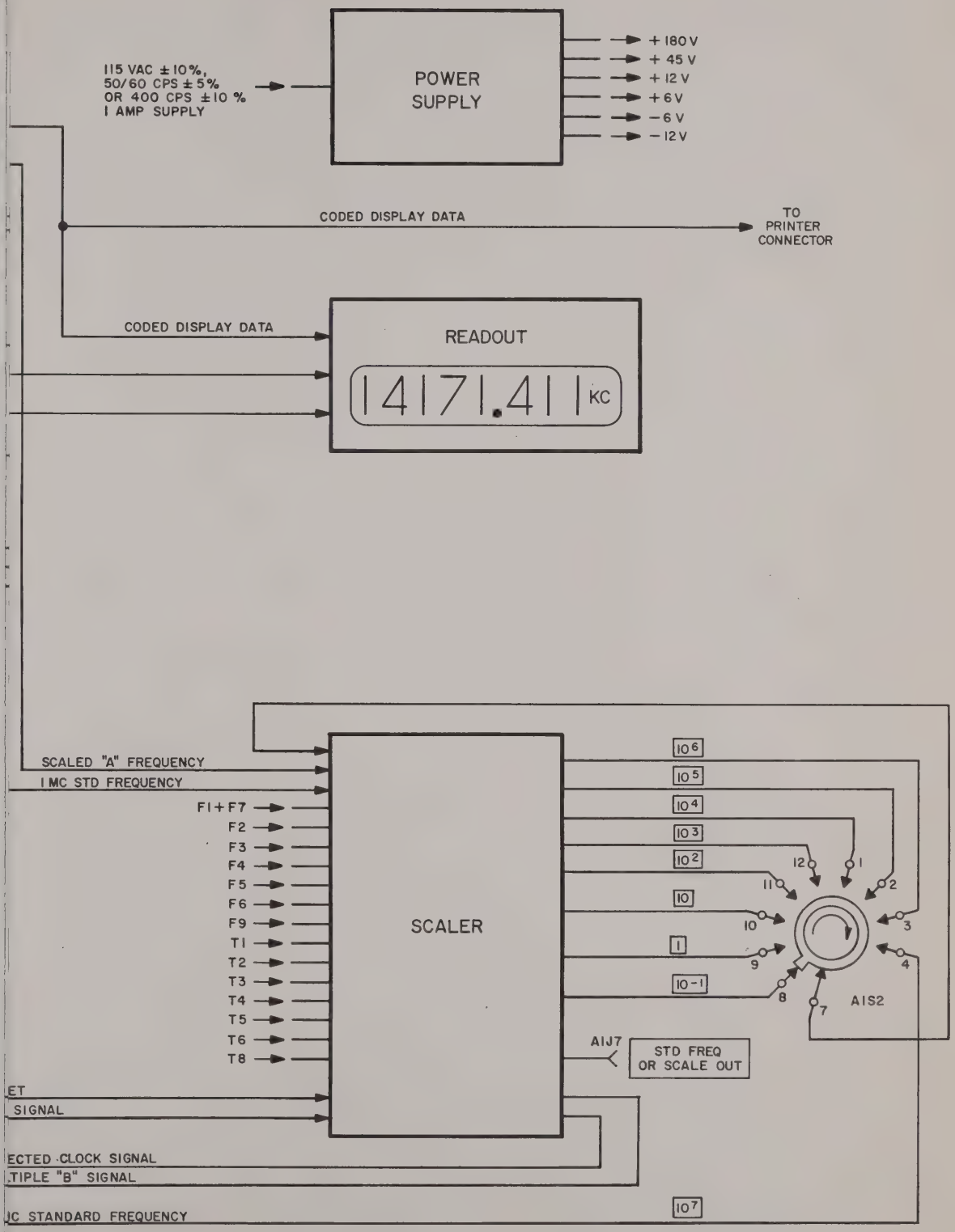

Figure 4-2. Overall Functional and Servicing Block Diagram

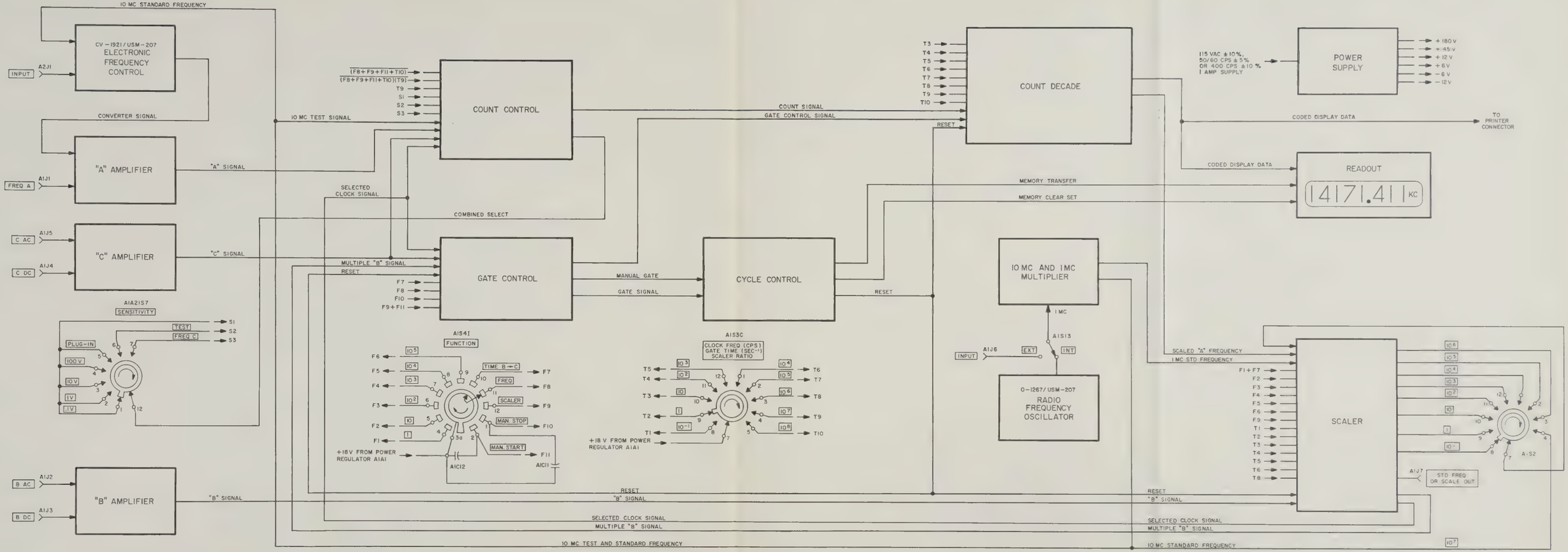

Figure 4-2. Overall Functional and Servicing Block Diagram

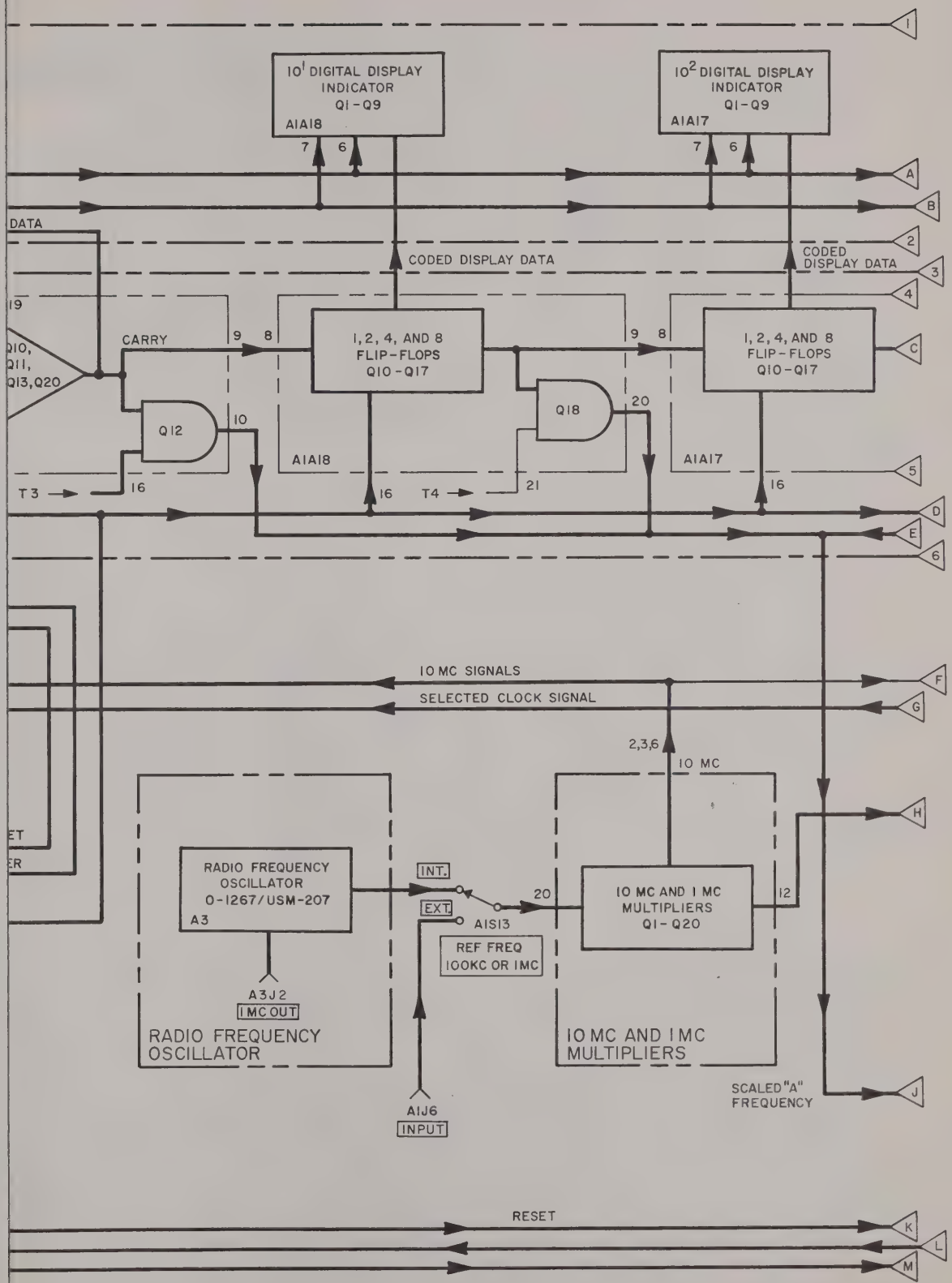

Figure 4-3. Overall Logic Diagram, Sheet 1 of 2

NOTES

1. Primary signal paths weighted.
2. ——— (heavier weight) indicates functional section boundaries.
3. — — — (lighter weight) indicates etched circuit boundaries.
4. When assembly and circuit boundaries coincide, solid lines are used with assembly reference designator shown in lower left-hand corner.
5. Letters and numbers near etched-circuit boundaries designate connector terminals.
6. Select signals S1 through S3, F1 through F11, and T1 through T10 generated by front-panel switches.
7. Capacitor A1C10 used on AN/USM-207 counters with A1A21 part No. MP13-523L4. On counters with A1A21 part No. MP13-537L1 capacitor A1C10 is replaced with capacitor A1A21C20.

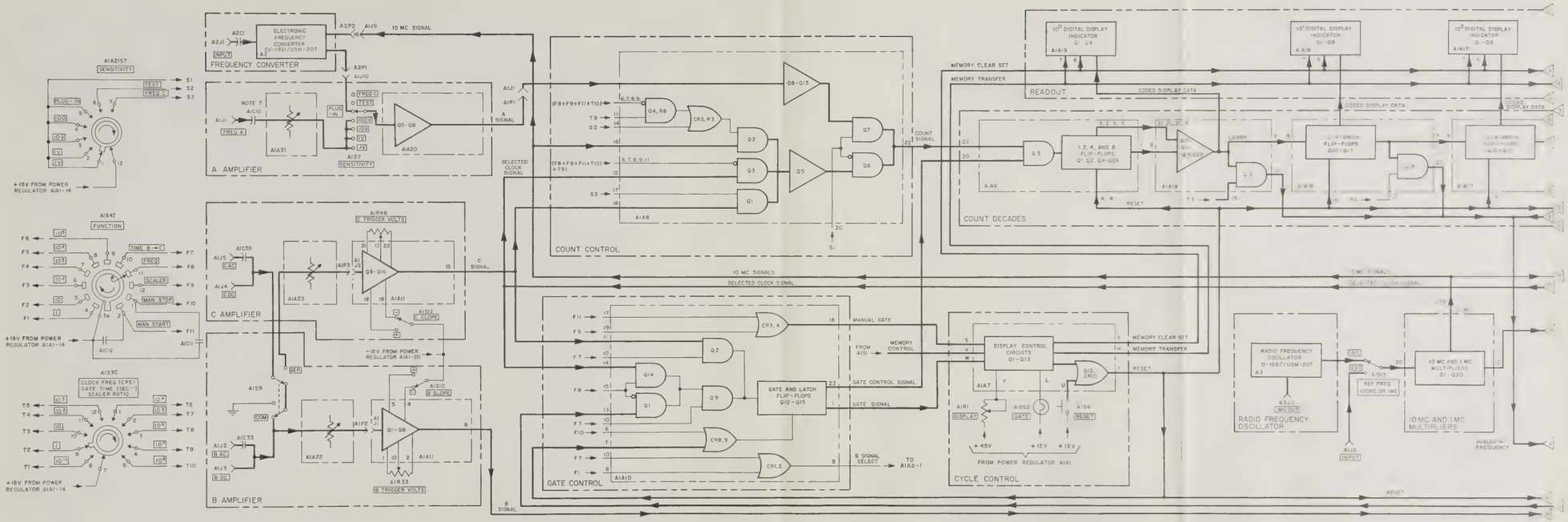

Figure 4-3. Overall Logic Diagram, Sheet 1 of 2

NOTES

1. Primary signal paths weighted.

2. ——— — — ——— (heavier weight) indicates functional section boundaries.

3. ——— — — ——— (lighter weight) indicates etched circuit boundaries.

4. When assembly and circuit boundaries coincide, solid lines are used with assembly reference designator shown in lower left-hand corner.

5. Letters and numbers near etched-circuit boundaries designate connector terminals.

6. Select signals S1 through S3, F1 through F11, and T1 through T10 generated by front-panel switches.

7. Capacitor A1C10 used on AN/USM-207 counters with A1A21 part No. MP13-523L4. On counters with A1A21 part No. MP13-537L1 capacitor A1C10 is replaced with capacitor A1A21C20.

Figure 4-3. Overall Logic Diagram, Sheet 1 of 2

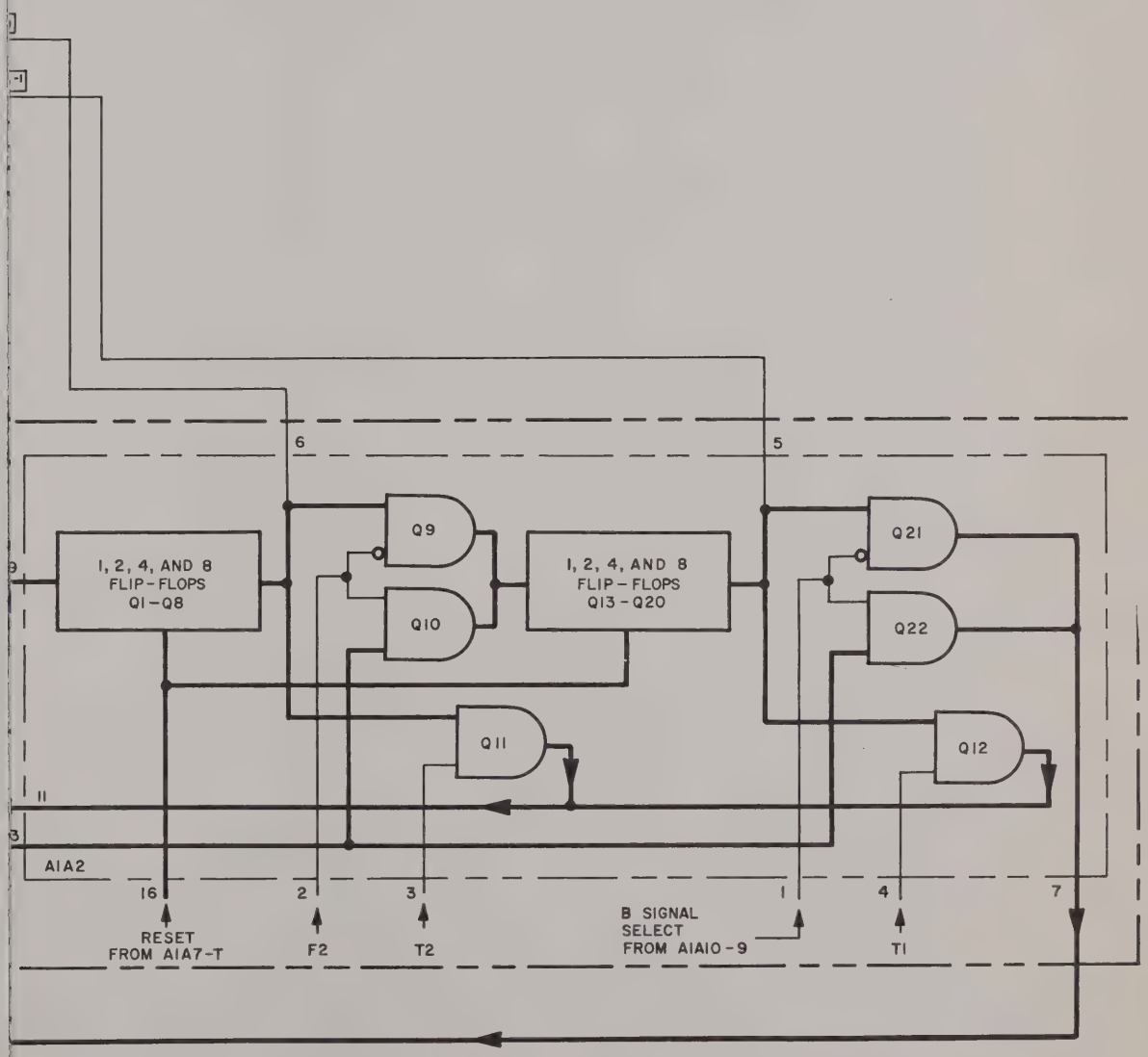

Figure 4-3. Overall Logic Diagram, Sheet 2 of 2

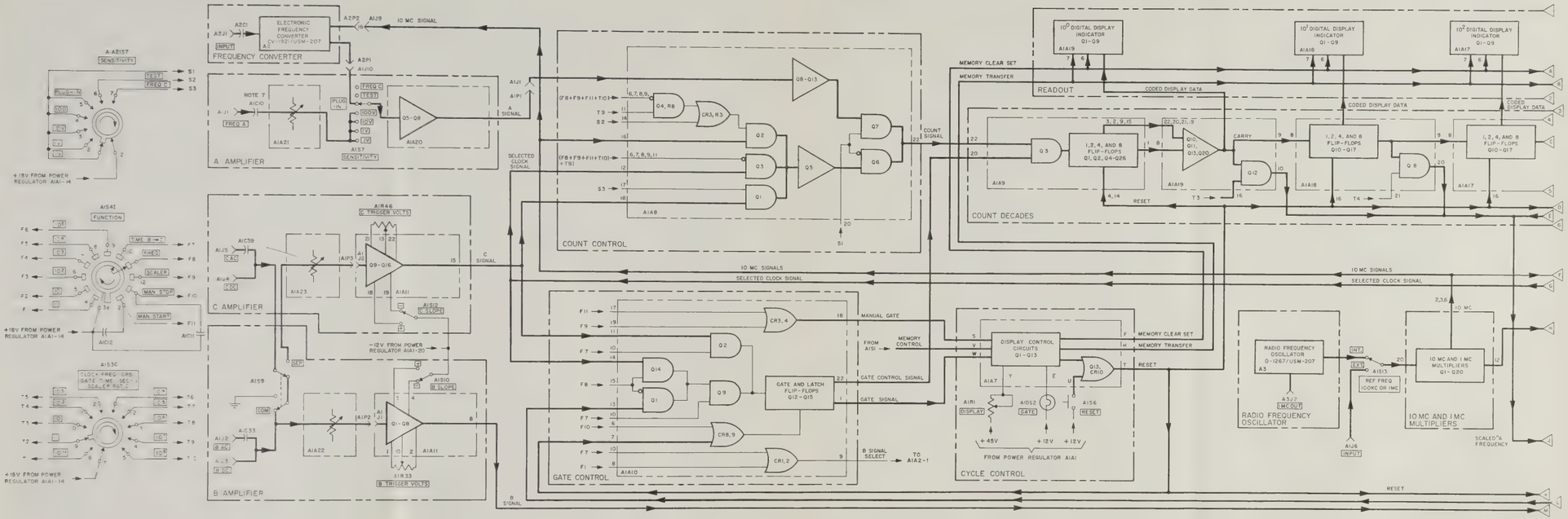

NOTES

1. Primary signal paths weighted
2. ——— ——— (heavier weight) indicates functional section boundaries
3. —— — —— — (lighter weight) indicates etched circuit boundaries
4. When assembly and circuit boundaries coincide, solid lines are used with assembly reference designator shown in lower left-hand corner
5. Letters and numbers near etched-circuit boundaries designate connector terminals
6. Select signals S1 through S3, F1 through F11, and T1 through T10 generated by front-panel switches.
7. Capacitor A1C10 used on AN/USM-207 counters with A1A21 part No. MP13-5231L4. On counters with A1A21 part No. MP13-5371L1 capacitor A1C10 is replaced with capacitor A1A21C20.

Figure 4-3. Overall Logic Diagram, Sheet 1 of 2

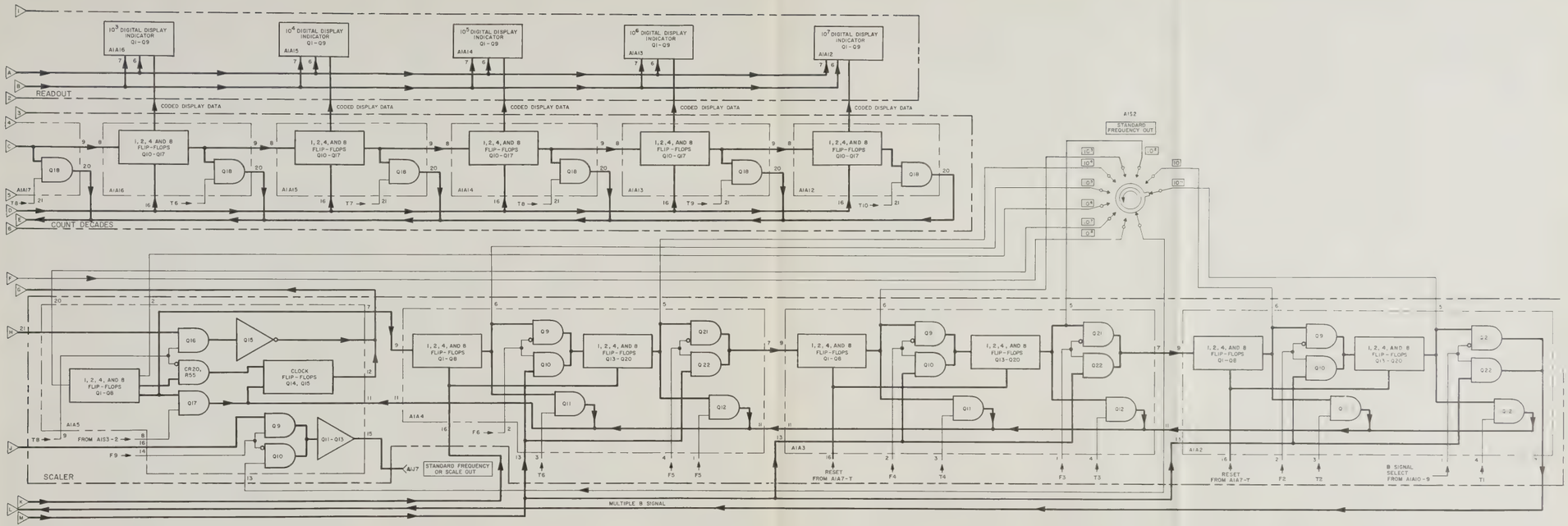

Figure 4-3. Overall Logic Diagram, Sheet 2 of 2

4-4. RADIO FREQUENCY OSCILLATOR O-1267/USM-207.

a. RADIO FREQUENCY OSCILLATOR O-1267/USM-207 FUNCTIONAL DESCRIPTION. — The radio frequency oscillator is a separate assembly consisting of a 1-mc oscillator, 1-mc amplifiers, and regulated power supply. The amplifier circuits and the major portion of the power supply circuits are mounted on one printed circuit board. The 1-mc oscillator, power transformer, series-regulating transistor and one filter capacitor are mounted on the chassis of the unit. Figure 4-4 shows the functional relationship of all circuits in the oscillator and gives test points and waveforms as an aid in trouble shooting.

The +25 v power supply operates all circuits in the oscillator and is independent of the basic counter chassis. Transformer T1 supplies 30 vac to the bridge rectifier consisting of A3CR1 through A3CR4. The +35-volt output of the bridge rectifier is applied to the input of the regulator consisting of A3Q1, A3Q2, and associated circuits.

The regulator is a series type with A3Q1 acting as a variable resistance in series with the load. Comparison amplifier A3Q2 compares a sample of the regulator output voltage (obtained from the voltage divider consisting of A3R7 and A3R8) against a stable reference voltage (the 11.2-volt drop across A3CR6 and A3CR7). Any dc shift or ac ripple in the output voltage is amplified and applied to the base of the series regulator transistor Q1. This signal has the proper polarity and amplitude to counteract the initial change in the output voltage. The regulated output voltage is supplied to the two 1-mc amplifiers A3Q3 and A3Q4 and to 1-mc oscillator A3Y1.

The 1-mc oscillator is a mechanically enclosed subassembly which includes the following functional circuits: (1) frequency generator; (2) regulator A3Y1Q4, regulator A3Y1CR1 and A3Y1R4, and (3) temperature control. The frequency generator consists of crystal A3Y1Y1, amplifiers A3Y1Q1 through A3Y1Q3, and associated circuits. The crystal resonates at 1 mc and receives its excitation from amplifier A3Y1Q1. Variations in the crystal resonant frequency as a result of aging are compensated for by COARSE and FINE adjustment capacitors A3Y1C3 and A3Y1C2. Regulator A3Y1Q4 provides the necessary operating voltage required by emitter follower A3Y1Q3 and serves as the input source for regulator A3Y1CR1 and A3Y1R4. Regulator A3Y1CR1 and A3Y1R4 provides the necessary operating voltage required by amplifiers A3Y1Q1 and A3Y1Q2. The 1-mc signal developed by A3Y1Y1 and A3Y1Q1 is amplified by A3Y1Q2 and applied through A3Y1Q3 to the output circuits of the radio frequency oscillator.

The temperature control maintains a constant temperature inside the crystal oven which houses the crystal and other frequency-generator parts. Thermal resistor A3Y1R15 senses the temperature inside the crystal oven, and causes an output to be which is proportional to the variation in that temperature. This output is amplified by amplifiers A3Y1Q5 through A3Y1Q8 and applied as a current variation to the heating element A3Y1R9. In turn, the heating element produces less or more heat, as required, to return the temperature to its regulated value. Reference diodes A3Y1CR4 through A3Y1CR7 supply thermal resistor A3Y1R15 with a constant input voltage. Temperature-setting resistor A3Y1R21 sets the regulated value of the temperature inside the crystal oven.

The output of the 1-mc oscillator is applied to two separate amplifier stages A3Q3 and A3Q4. The load for A3Q3 is the series connection of A3R11 and A3R12. The common point of these two resistors is connected to ac ground by A3C4. This limits the maximum signal swing at the collector of A3Q3 to approximately 12 volts. The output of Q3 is the 1-mc standard frequency used throughout the counter. The load for A3Q4 is a 1-mc tuned tank coupled through an adjustable winding on A3T2 to the 1 MC OUT connector A3J2 on the panel of the assembly. The sinusoidal signal at this connector is approximately 1.0 v rms when operating into a 50-ohm load.

b. RADIO FREQUENCY OSCILLATOR O-1267/USM-207 TROUBLE SHOOTING. — Problems in the radio frequency oscillator fall into three categories: (1) Problems in the +25-volt regulated supply, (2) problems in the 1-mc oscillator, and (3) problems in the output circuits. Check the +25-volt regulated supply first, as described in table 4-4; then check the 1-mc oscillator.

Note

The 1-mc oscillator is a mechanically enclosed subassembly, and cannot be tested in detail while mounted in the radio frequency oscillator. To repair it, requires specialized equipment and materials, not available on board ship. When the fault is isolated to the 1-mc oscillator replace it with one which is known to be operating properly, but do not discard the faulty subassembly. Instead, ship it to a test station which has the proper repair facilities. Refer to paragraph 5-5ac for shipping instructions.

The 1-mc oscillator normally produces an output voltage of approximately 1 volt rms after a 20-minute warmup. However, the load circuits will operate properly with an input voltage as low as 0.75 volt rms. Consider this before replacing the 1-mc oscillator. Finally, check the output circuits using standard signal-tracing techniques. See figure 4-4 for test points and expected waveforms.

c. USEFUL ILLUSTRATIONS. — Illustrations useful in maintaining this functional section are: figures 4-4, 5-24 through 5-32 and 5-55 through 5-59.

TABLE 4-4. RADIO FREQUENCY OSCILLATOR O-1267/USM-207 TROUBLE SHOOTING

Note

The radio frequency oscillator is a shore-repairable item. The following procedures are not intended to be performed on board ship.

STEP	ACTION	RESULTS	NEXT STEP
		+25-VOLT REGULATED SUPPLY	
1	Set POWER switch to STBY. Measure dc voltage at test point C after 20-minute warmup.	Voltage is correct (+25 volts ±10%).	2
		Voltage is near zero.	3
		If voltage is greater than +27 volts, check A3Q1, A3Q2, A3CR5, A3CR6, and A3CR7.	
2	Measure ac ripple voltage at test point C.	Ripple voltage is 100 mv peak-to-peak or less.	4
		If ripple voltage is greater than 100 mv peak-to-peak, check A3C1 and A3C3.	
3	Check waveform at test point E, and compare with that shown in figure 4-4.	Waveform is correct.	16
		Waveform is incorrect.	4
4	Disassemble the 1-mc oscillator according to paragraph z+3. Connect test setup as shown in figure 5-32, and measure dc voltage at test point K.	Voltage is correct (+20 volts).	5
		If voltage is absent or too low (less than +18 volts), check A3Y1Q4.	
5	Measure dc voltage at test point J.	Voltage is correct (+12 volts ±1 volt).	6
		If voltage is incorrect, check A3Y1CR1.	
		If voltage is absent, check A3Y1R4.	
6	Observe waveform at test point G, and compare with that shown in figure 4-4.	Waveform is correct.	14
		If amplitude is too low (less than 1.4 volts peak-to-peak), check A3Y1R1, A3Y1Q1, and A3Y1Y1.	
		Frequency is incorrect.	7
7	While monitoring the frequency at test point F, turn first A3Y1C3 then A2Y1C2 through its entire adjustment range.	Frequency varies gradually as each adjustment capacitor is turned.	8
		If, when one of the adjustment capacitors is turned, frequency varies abruptly or not at all, check that capacitor.	
8	Remove all external connections from the 1-mc oscillator and, while still disassembled, place in an oven preheated to 75°C. Leave it in the oven for a minimum of two hours; then remove it from the oven		

TABLE 4-4. (Continued)

STEP	ACTION	RESULTS	NEXT STEP
		+25-VOLT REGULATED SUPPLY (cont)	
8 (cont)	and reconnect it in the test setup as shown in figure 5-32.		
9	Observe heating element A3Y1R9, and verify that it is energized.	Heating element is energized.	13
		Heating element is not energized.	10
10	Measure dc voltage at test point L.	Voltage is correct (+2. 2 volts ±0. 1 volt).	11
		If voltage is incorrect, check A3Y1R17.	
11	Measure dc voltage at test point M.	Voltage is correct (0. 9 volt ±0. 1 volt).	12
		If voltage is incorrect, check A3Y1R15.	
12	Measure dc voltage at test point N.	If voltage is correct (7. 5 volts ±0. 5 volt), check heating element A3Y1R9.	
		If voltage is incorrect, check A3Y1Q5, A3Y1Q6, A3Y1Q7, and A3Y1Q8.	
13	Calibrate the frequency of the 1-mc oscillator according to paragraph 5-4i. Use test setup as described in paragraph 5-4i, but apply +25 volts between terminals E19 and E20 and probe oscillator output at terminal E21. Following calibration, allow two hours for the oscillator to stabilize, then check the frequency again.	If the oscillator cannot be calibrated, check A3Y1Y1.	
		If the oscillator can be calibrated, but, following the two-hour warmup, the frequency is off by more than 1 part in 10^9, perform the temperature adjustment procedure of paragraph 5-5ai.	
14	Check output voltage at test point H.	If output voltage is correct, check A3Y1Q3.	
		If output voltage is incorrect, check A3Y1Q2.	
		OUTPUT CIRCUITS	
15	Observe waveform at test point I and compare with that shown in figure 4-4.	Waveform is correct.	16
		If waveform is incorrect, check A3Q3.	
16	Observe waveform at test point D and compare with that shown in figure 4-4.	Waveform is correct.	17
		If waveform is incorrect, check A3Q4.	
17	Connect 50-ohm load to A3J2. Observe waveform at test point 2 and compare with that shown in figure 4-4.	If waveform is incorrect, perform amplitude alignment procedure described in paragraph 5-4j. Then, if the waveform is still incorrect, check A3T2.	

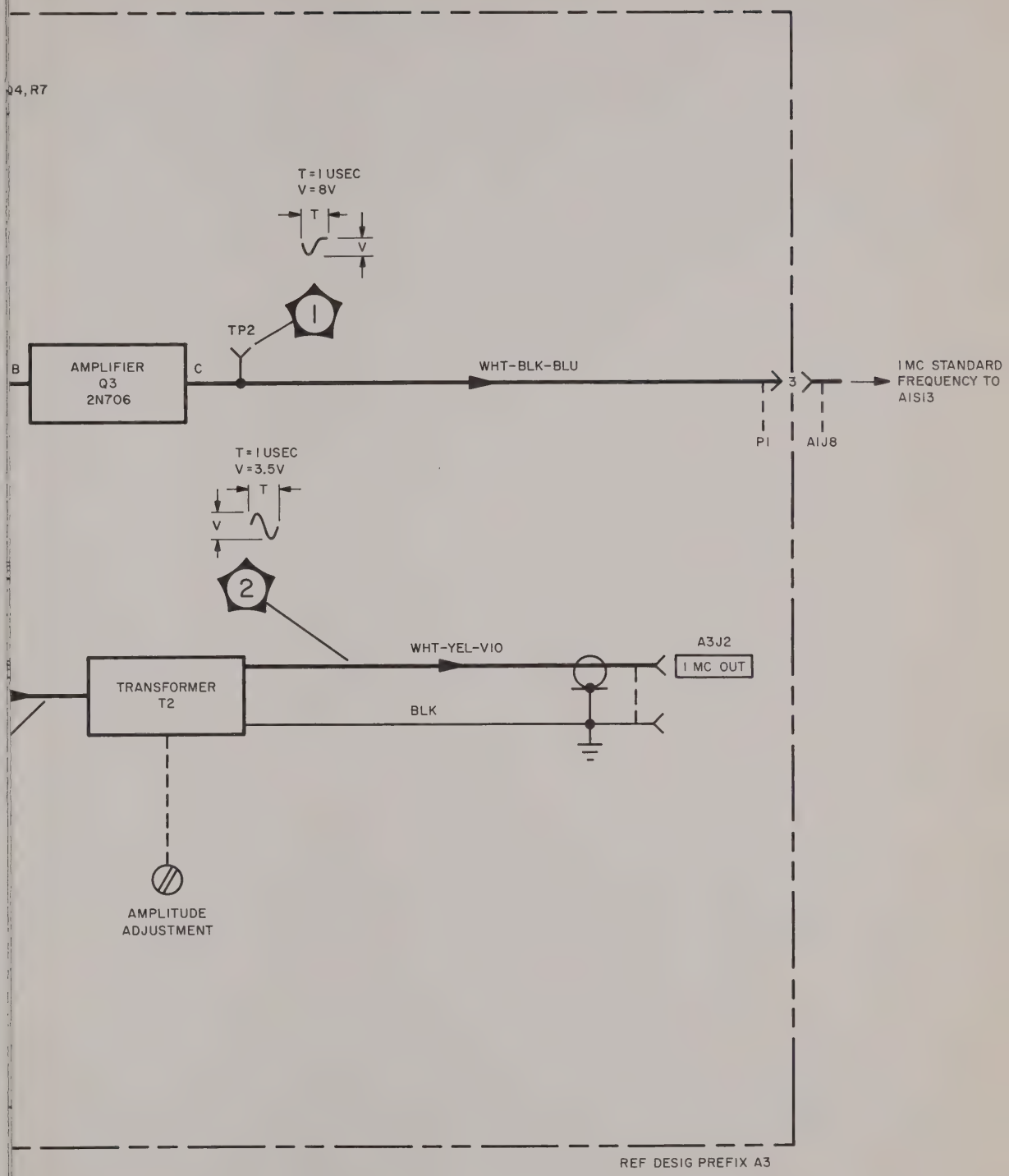

Figure 4-4. Radio Frequency Oscillator O-1267/USM-207, Functional and Servicing Block Diagram

NOTES

1. Primary signal paths weighted.
2. ——— — — ——— indicates etched circuit boundaries.
3. Dc voltages are preceded by "+" or "−".
4. Waveforms recorded with an AN USM-140B Oscilloscope.

   Control settings:

   Sensitivity: 5/cm.
   Sweep time: 1 μs/cm.

5. Explanation of symbols placed at waveforms:

   T – Duration of the portion of waveform indicated
   V – Peak-to-peak voltage.

6. Dc voltages are measured with a CCUH-801 Dc Differential Voltmeter.
7. Letters and numbers outside of some logic or circuit blocks indicate transistor elements.
8. Operating control settings:

   POWER switch to STBY.

9. The letters CW, placed adjacent to A3Y1R21, indicate the direction of rotation viewed from the shaft end.

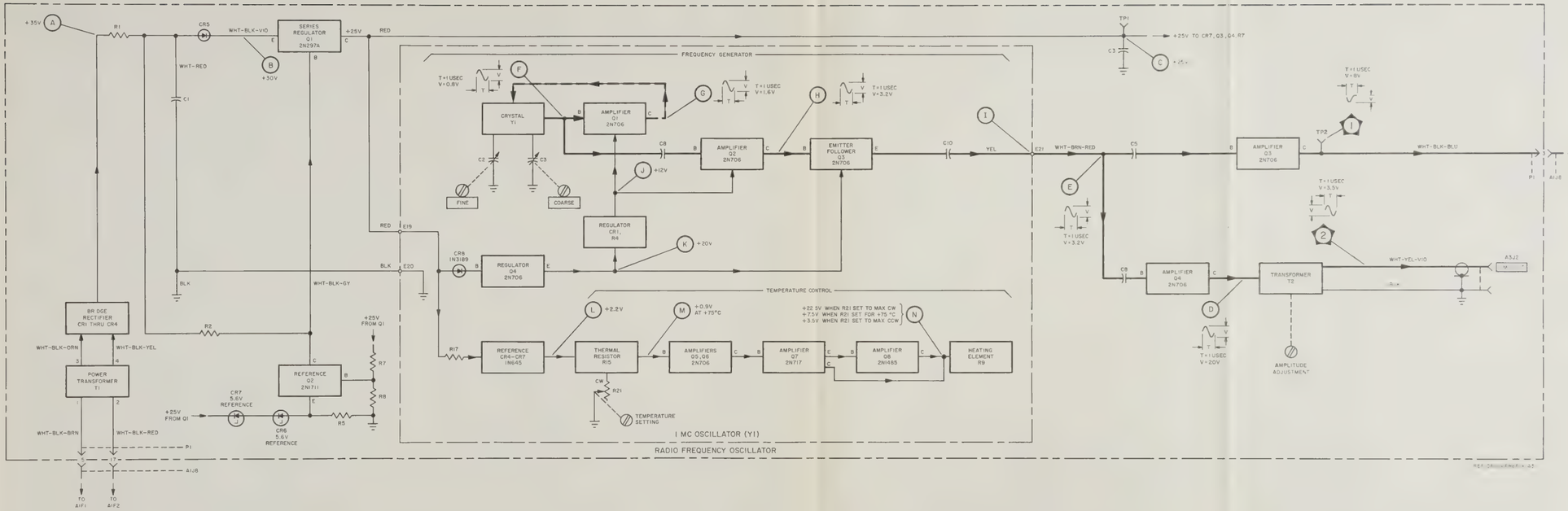

Figure 4-4. Radio Frequency Oscillator O-1267, USM-207. Functional and Servicing Block Diagram.

4-5. ELECTRONIC FREQUENCY CONVERTER CV-1921/USM-207.

a. ELECTRONIC FREQUENCY CONVERTER CV-1921/USM-207 FUNCTIONAL DESCRIPTION. — The converter is a separate assembly consisting of all circuits necessary for converting signals in the frequency range of 100 mc to 500 mc to a frequency range within the measurement capabilities of the counter. Figure 4-5 shows the functional relationship of all circuits in the converter and gives test points and waveforms as an aid in trouble shooting.

The converter operates on the heterodyne principle of mixing the unknown frequency with a known frequency to produce a beat frequency which can be measured by the counter. The result of the beat frequency measurement and the frequency of the known mixed signal can then be used to determine the frequency of the original signal.

Nine mixing frequencies (100, 150, 200, 250, 300, 350, 400, 450, and 500 megacycles) are used in the converter, all derived from the 10-mc standard frequency produced by the frequency multiplier A1A6. The 10-mc standard frequency is applied to the 50-mc multiplier A2A1; this assembly supplies a 50-mc signal to the harmonic generator. The harmonic generator produces the nine mixing frequencies. It consists of diode A2CR3 inside a cavity resonator. This diode produces harmonics which excite the cavity at each of the mixing frequencies. The resonant frequency of the cavity may be varied by means of switch A2S4 to produce any of the mixing frequencies at its output.

The remaining circuits of the converter consist of the attenuator, the mixer, and the video amplifier. The arrangement of these circuits is shown in figure 4-5.

When the input signal to the converter is between 35 mc and 100 mc, proper operation will occur when the DIRECT-HETERODYNE switch is in the DIRECT position. In this position the input signal is applied through the attenuator network R16, R17, C35 directly to the video amplifier. This action results in the input signal merely being amplified before it is applied to the counter.

Input frequencies between 100 mc and 500 mc are measured with the DIRECT-HETERODYNE switch set to HETERODYNE. The input signal is applied to the balanced mixer and combined with a mixing frequency to produce a difference frequency between 5 mc and 60 mc. The difference frequency is passed through the low pass filter, amplified in the video amplifier, and applied to the counter. The mixing frequency selected can be either above or below the incoming frequency, as long as it produces a difference frequency in the range of 5 mc and 60 mc. However, in most cases, each measurement is performed twice: First, the mixing frequency selector switch is set to the lower frequency and the resultant readout of the counter is added to the mixing frequency. Next, the mixing frequency selector switch is set to the higher frequency, and the resultant readout of the counter is subtracted from the mixing frequency. The latter serves as a verification for the first measurement. The 500 position of the mixing frequency selector switch is used primarily for this purpose.

The amplified difference frequency of the video amplifier is, in addition, amplified in the meter amplifier and monitored by LEVEL METER A2M1. The LEVEL METER deflects in proportion to the input amplitude, and indicates whether or not this amplitude is sufficient to drive the counter.

b. FREQUENCY CONVERTER CV-1921/USM-207 TROUBLE SHOOTING. —

Note

To trouble shoot the converter requires special test equipment not available on board ship.

The converter operates at relatively high frequencies. As such, it is not suited for a point-by-point trouble-shooting procedure. Instead, the operation of the converter is tested in each position of the mixing frequency selector switch, and the fault isolated to one or more groups of circuits. In general, if the operation is improper in every position of the mixing frequency selector switch, the fault is probably located either in the input attenuator or the video amplifier. If improper operation occurs in only one or two switch positions, the fault can probably be found in a cavity component associated with that switch position. Finally, check the circuits in detail. Check transistors and diodes first, followed by capacitors and inductors.

A point-by-point trouble-shooting procedure is possible for the 50-mc frequency multiplier and video amplifier circuits. These procedures are shown in table 4-5, and are performed once the problem is isolated to either of these circuit groups.

Problems in the 50-mc frequency multiplier can be caused by improper tuning. Before starting the trouble-shooting procedure, check that each stage of the converter is properly tuned. The procedure for tuning each stage is given in paragraph 5-4k.

c. USEFUL ILLUSTRATIONS. — Illustrations useful in maintaining this functional section are: figures 4-5, 5-4, 5-5, 5-6, 5-7, 5-8, 5-9, 5-51, 5-52, 5-53, 5-54, 5-60, and 5-61.

TABLE 4-5. 50 MC FREQUENCY MULTIPLIER AND VIDEO AMPLIFIER TROUBLE SHOOTING

Note

The following procedure is not intended to be performed on board ship.

STEP	ACTION	RESULTS	NEXT STEP
	50 MC MULTIPLIER (A2A1)		
1	Observe waveform at test point 2 on A2A1 and compare with that shown in figure 4-5.	Waveform is correct.	2
		If waveform is incorrect, check A2A1Q1, A2A1Q2, A2A1CR1, A2A1CR2, A2A1T1, and A2A1T2. Readjust A2A1T1 and A2A1T2.	
2	Observe waveform at test point B on A2A1 and compare with that shown in figure 4-5.	Waveform is correct.	3
		If waveform is incorrect, check A2A1Q3, A2A1Q4, A2A1Q5, A2A1T3, A2A1T4, and A2A1T5. Readjust A2A1T3, A2A1T4, A2A1T5, and A2R4.	
	VIDEO AMPLIFIER		
3	Place mixer frequency selector switch in the 0 position, attenuator switches to the left, and DIRECT-HETERODYNE switch to DIRECT. Apply a 10-mv rms 100-mc sine wave to the INPUT connector. Observe the waveform at test point 1 and compare with that shown in figure 4-5.	Waveform is correct.	4
		If waveform is incorrect, check A2Q3, A2Q4, A2Q5, and A2Q6.	
4	Observe action of level meter A2M1.	If meter reads in green area, check counter operation.	
		If meter does not read in green area, check A2Q7, A2CR7, A2CR8, A2M1, A2R41, A2R42, and A2R43.	

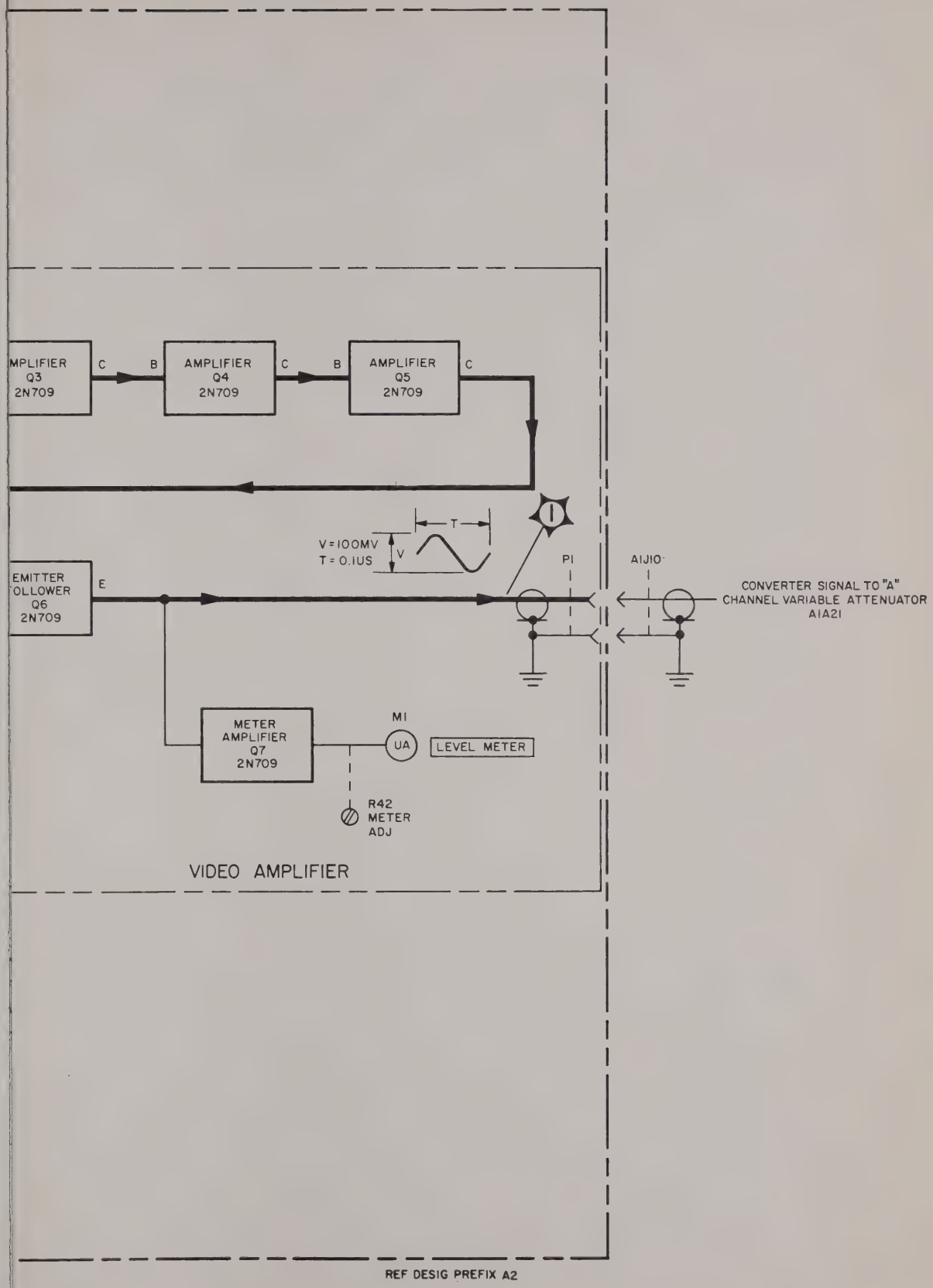

Figure 4-5. Electronic Frequency Converter CV-1921/USM-207, Functional and Servicing Block Diagram

TABLE 4-5. 50 MC FREQUENCY MULTIPLIER AND VIDEO AMPLIFIER TROUBLE SHOOTING

Note

The following procedure is not intended to be performed on board ship.

STEP	ACTION	RESULTS	NEXT STEP
	50 MC MULTIPLIER (A2A1)		
1	Observe waveform at test point 2 on A2A1 and compare with that shown in figure 4-5.	Waveform is correct.	2
		If waveform is incorrect, check A2A1Q1, A2A1Q2, A2A1CR1, A2A1CR2, A2A1T1, and A2A1T2. Readjust A2A1T1 and A2A1T2.	
2	Observe waveform at test point B on A2A1 and compare with that shown in figure 4-5.	Waveform is correct.	3
		If waveform is incorrect, check A2A1Q3, A2A1Q4, A2A1Q5, A2A1T3, A2A1T4, and A2A1T5. Readjust A2A1T3, A2A1T4, A2A1T5, and A2R4.	
	VIDEO AMPLIFIER		
3	Place mixer frequency selector switch in the 0 position, attenuator switches to the left, and DIRECT-HETERODYNE switch to DIRECT. Apply a 10-mv rms 100-mc sine wave to the INPUT connector. Observe the waveform at test point 1 and compare with that shown in figure 4-5.	Waveform is correct.	4
		If waveform is incorrect, check A2Q3, A2Q4, A2Q5, and A2Q6.	
4	Observe action of level meter A2M1.	If meter reads in green area, check counter operation.	
		If meter does not read in green area, check A2Q7, A2CR7, A2CR8, A2M1, A2R41, A2R42, and A2R43.	

NOTES

1. Primary signal paths weighted.
2. ——— — — ——— indicates assembly boundaries.
3. Names of panel controls and connectors are enclosed in boxes.
4. Dc voltages are preceded by "+" or "-".
5. Waveforms recorded with an AN/USM-140B Oscilloscope.

   Control settings:

   Sensitivity: 5 v/cm, 0.1 v/cm
   Sweep time: 1 μs/cm
   Sweep magnifier: X10.

6. Explanation of symbols placed at waveforms:

   T – Duration of the portion of waveform indicated.
   V – Peak-to-peak voltage.

7. Dc voltages are measured with a CCUH-801 Dc Differential Voltmeter.
8. The letters CW, placed adjacent to the appropriate terminals of A2R46, indicate the direction of rotation viewed from the shaft end.
9. Letters and numbers outside of some logic or circuit blocks indicate transistor elements.
10. Cavity resonator, S3, and S4 circuits shown inside heavy dashed block are used on converters with serial No. A1, A2, A3, A14, A16, A19, A23, A29, A32, A34, A35, A37, and up. Cavity resonator, S3, and S4 circuits shown inside light dashed block (at left) are used on all other converters.
11. Panel marking indicated appears only on later converters.

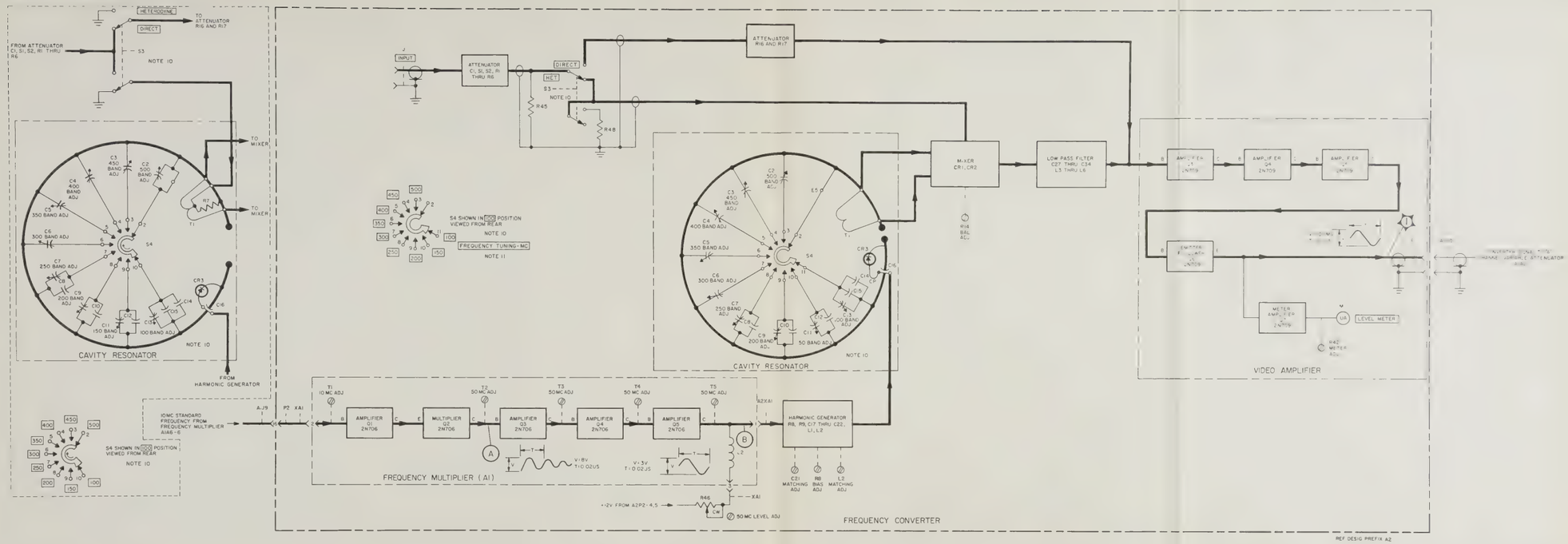

Figure 4-5. Electronic Frequency Converter CV-1921/USM-207, Functional and Servicing Block Diagram

4-6. A AMPLIFIER.—

a. A AMPLIFIER FUNCTIONAL DESCRIPTION. —The A amplifier consists of A attenuator A1A21 and af-rf amplifier A1A20. The A attenuator is mounted on the front panel SENSITIVITY switch; the af-rf amplifier is constructed on printed-circuit board A1A20. This functional section receives the A input signal from the FREQ. A receptacle and the output signal from the frequency converter, attenuates and/or amplifies these signals, and supplies one, as selected, to count control functional section. Variable resistor A1R51 is a sensitivity control that adjusts the input level from the converter in measurements using the converter so that the sensitivity of the instrument can be maintained at a constant value to compensate for allowable tolerances in the converter sensitivity. The A amplifier functional and servicing block diagram is shown in figure 4-6. The A input signal is capacity-coupled to the A attenuator, and the output of the A attenuator is applied to the af-rf amplifier. Signals appearing at the input of the af-rf amplifier are coupled to the gate terminal of the field-effect transistor A1A20Q6. This transistor operates as a source-follower and presents a high input impedance to low frequency signals. This stage is bypassed by A1A20C18 at higher frequencies. Current to A1A20Q6 is supplied by the constant-current generator A1A20Q5.

The output of the source follower is capacity-coupled to two-stage amplifier A1A20Q7 and A1A20Q8. The output of A1A20Q8 becomes the A signal that is supplied to the count control functional section.

b. A AMPLIFIER TROUBLESHOOTING.— Problems in the A amplifier fall into two categories: (1) problems in the attenuator assembly, and (2) problems in the amplifier stages.

Problems in the attenuator assembly usually result from opened or shorted parts due to application of excessive voltages to the FREQ. A receptacle. The coupling capacitor at this input is a 600-volt unit, and may be damaged if voltages greater than this are applied. If the amplifier does not produce an output in certain positions of the SENSITIVITY switch check the parts involved in that switch position. To trouble shoot problems in the amplifier stages, first remove left section of the front panel from the front casting. The procedure for removing the panel is given in Section 5. The trouble shooting procedure given in table 4-6 follows a signal through the amplifier on a stage-by-stage basis. When a stage is found where the signal is absent, check the parts associated with that stage.

c. USEFUL ILLUSTRATIONS.— Illustrations useful in maintaining this functional section are: figures 4-6, 5-8, 5-9, 5-10, 5-50, and 5-63.

TABLE 4-6. A AMPLIFIER TROUBLE SHOOTING

STEP	ACTION	RESULTS	NEXT STEP
1	Set the controls on the front panel of the counter as follows: POWER switch to TRACK. SENSITIVITY switch to 10 V. Apply a 10-volt rms, 1000-cps sine wave to the FREQ. A connector. Observe the waveform at test point A and compare with that shown in figure 4-6.	Waveform is correct.	2
		If waveform is incorrect or absent, check A1A20Q6, A1A21R6, and A1A21R7.	
2	Change SENSITIVITY switch to 1 V and amplitude of input signal to 1 volt rms. Observe the waveform at test point A and compare with that shown in figure 4-6.	Waveform is correct.	3
		If waveform is incorrect or absent, check A1A21R4 and A1A21R5.	
3	Change SENSITIVITY switch to .1 V and amplitude of input signal to 0.1 volt rms. Observe the waveform at test point A and compare with that shown in figure 4-6.	Waveform is correct.	4
		If waveform is incorrect or absent, check A1A21R2 and A1A21R3.	
4	Observe the waveform at test point B and compare with that shown in figure 4-6.	Waveform is correct.	5
		If waveform is incorrect, check A1A20Q7.	
5	Observe the waveform at test point 1 and compare with that shown in figure 4-6.	If waveform is correct, check count control.	
		If waveform is incorrect, check A1A20Q8.	

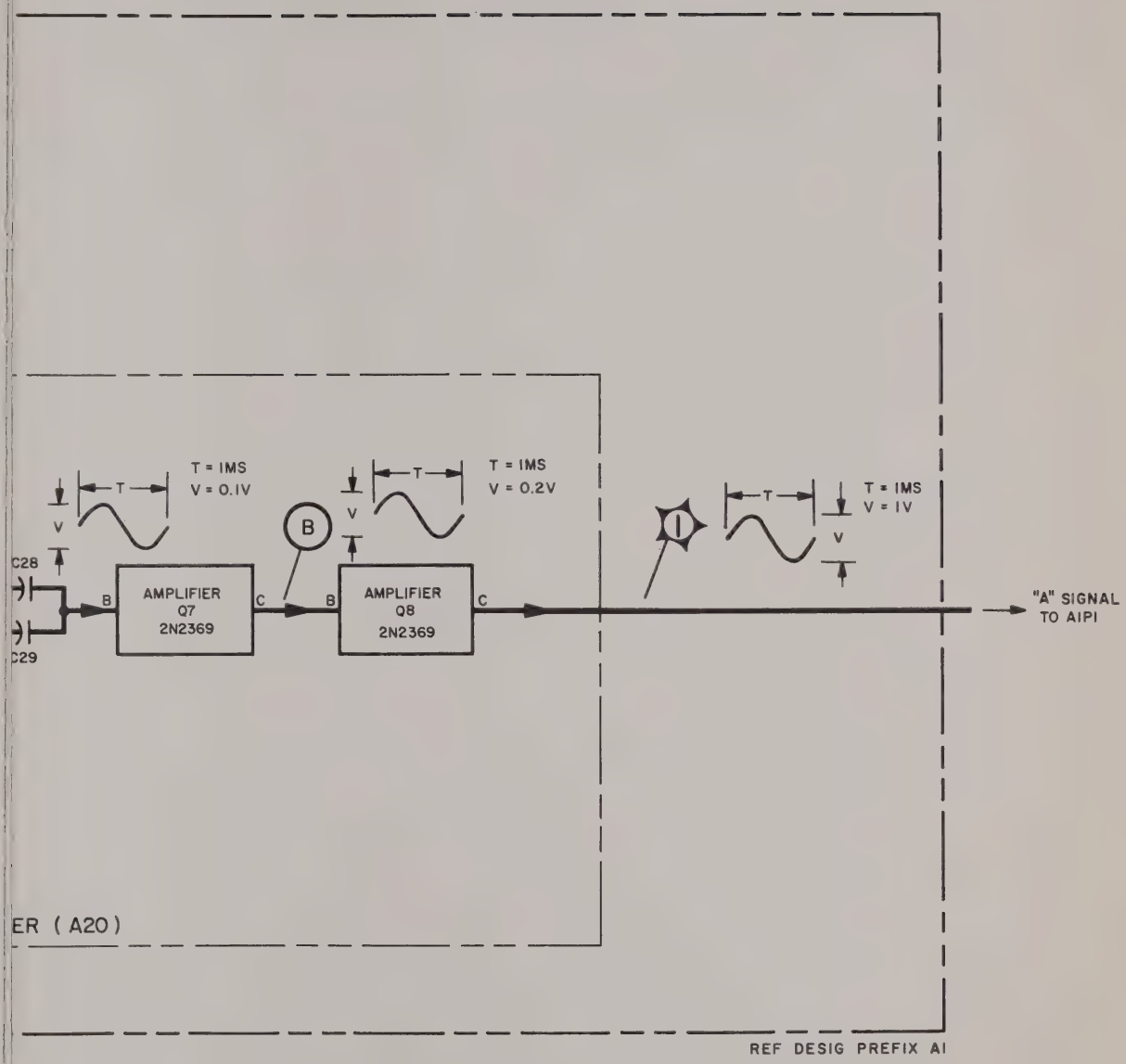

Figure 4-6. "A" Amplifier, Functional and Servicing Block Diagram

NOTES

1. Primary signal paths weighted.
2. ——— — — ——— indicates assembly boundaries.
3. Names of panel controls and connectors are enclosed in boxes.
4. Dc voltages are preceded by "+" or "−".
5. Waveforms recorded with an AN/USM-140B Oscilloscope.

   Control settings:

   Sensitivity: 1 v/cm.
   Sweep time: 1 ms/cm.

6. Explanation of symbols placed at waveforms:

   T – Duration of the portion of waveform indicated.
   V – Peak-to-peak voltage.

7. Dc voltages are measured with a CCUH-801 Dc Differential Voltmeter.
8. Letters and numbers outside of some logic or circuit blocks indicate transistor elements.
9. Operating control settings:

   POWER switch to TRACK.
   SENSITIVITY switch to 10 V with 10 v rms applied to FREQ. A connector.
   SENSITIVITY switch to 1 V with 1 v rms applied to FREQ. A connector.
   SENSITIVITY switch to . 1 V with 0. 1 v rms applied to FREQ. A connector.

10. R51 not included on units with serial No. A4 through A13, A15, A17, A18, A20, A21, A22, A24 through A28, A30, A31, A33, and A36.

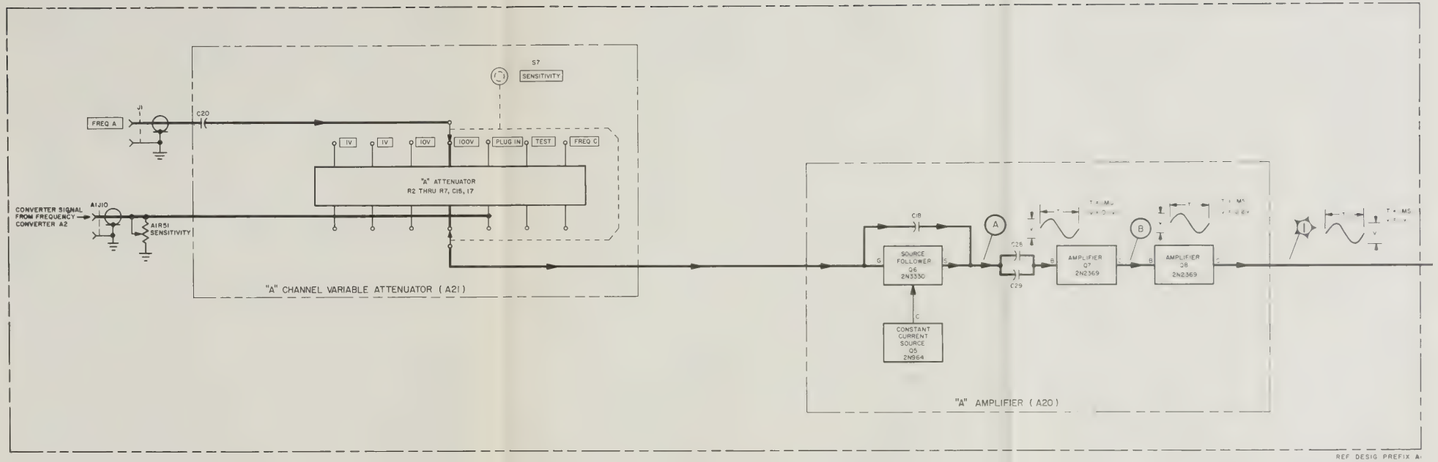

Figure 4-6. "A" Amplifier, Functional and Servicing Block Diagram

4-7. B AMPLIFIER.

a. B AMPLIFIER FUNCTIONAL DESCRIPTION. — The B amplifier consists of the channel B variable attenuator and trigger level control A1A22 and part of af-rf amplifier A1A11. The channel B variable attenuator is mounted on the front-panel B MULTIPLIER switch; the af-rf amplifier is constructed on one-half of printed circuit board assembly A1A11. This functional section receives the input B signal from the B AC and B DC input connectors, attenuates, amplifies, and shapes this signal for use throughout the counter. The B amplifier functional and servicing block diagram is shown in figure 4-8.

The B DC input is direct-coupled through the attenuator to the B coaxial connector J1 on A1A11. The B AC input is capacity-coupled by A1C33 to the same point. The mode selector switch A1S9 permits the input of the B attenuator to be connected to the input of the C attenuator when certain measurements requiring common B and C signals are made. Signals appearing at the B coaxial connector on A1A11 are coupled to the gate terminal of the field-effect-transistor A1A11Q1. This stage (AMPL1) presents a high input impedance to low-frequency input signals. The output of this stage is coupled to differential amplifier DA2, consisting of A1A11Q2 and A1A11Q3. The output of A1A11Q2 is applied to dc amplifier AMPL3 consisting of A1A11Q4. A portion of the output of this stage is fed back through A1A11R13 to A1A11Q3. This feedback stabilizes the differential amplifier over changes in temperature and transistor characteristics. The output of A1A11Q4 is also applied to A1A11Q5. This transistor is part of Schmitt-trigger stage ST4 which provides a pulse output to the remainder of the amplifier.

The differential amplifier, dc amplifier, and Schmitt trigger make up the trigger circuits for the B input. The input signal to the Schmitt trigger can be made to vary about a dc level by the dc bias-voltage variations on the base of A1A11Q3. This variable bias voltage is supplied by the B TRIGGER VOLTS control A1R33. Since the trigger points of the Schmitt trigger are fixed, the points on the input signal which cause the Schmitt trigger to change state can be varied by adjusting the B TRIGGER VOLTS control. The range of this control is sufficient to vary the trigger points of the Schmitt trigger over the complete waveform of any signal within the dynamic range of the amplifier.

The output of the Schmitt trigger is applied to AND gate AG7 and to inverter INV5 consisting of A1A11Q7. The output of the inverter is applied to another AND gate, AG6. Both AND gates are controlled by the B SLOPE switch A1S10. When this switch is set to +, the output of the Schmitt trigger is capacity-coupled through AG7 to the output inverter INV8 consisting of A1A11Q8. When the B SLOPE switch is set to −, the output of INV5 is capacity-coupled through AG6 to INV8. The two AND gates and the B SLOPE switch have the effect of selecting either the positive or negative slope of the input waveform for ultimately triggering the output inverter. Figure 4-7 shows the relationships of a typical sine-wave input signal to the amplifier output for all variations of trigger level polarity and slope selection.

b. B AMPLIFIER TROUBLE SHOOTING. — Problems in the B amplifier fall into three categories: (1) problems in the attenuator assembly, (2) problems in the trigger voltage adjustment stages and, (3) problems in the slope selection stages. Table 4-7 is a trouble-shooting chart for the B amplifier. Some of the problems mentioned can be caused by improper adjustment of the amplifier. Before starting the trouble-shooting procedure, check that the amplifier is properly adjusted. The procedure for adjusting the amplifier is given in paragraph 5-4h.

Problems in the attenuator assembly usually result from opened or shorted parts due to application of excessive voltages to the B AC or B DC inputs. The coupling capacitor at the B AC input is a 600-volt unit and may be damaged if voltages greater than this are applied. If the amplifier does not produce an output in certain positions of the B MULTIPLIER switch, check the parts involved in that switch position.

Problems in the trigger voltage adjustment stages will be in either the field-effect transistor stage AMPL1, differential amplifier DA2, dc amplifier stage AMPL3, or Schmitt trigger ST4. In trouble shooting for problems in these stages it is most efficient to follow the signal through the amplifier until the faulty stage is located. When it is located, check the individual parts in detail.

Problems in the slope selection stages will be in either inverter stages INV5 and INV8, or in AND gates AG6 and AG7. If a part in the amplifier is replaced, readjust the assembly according to the procedure of paragraph 5-4h.

c. USEFUL ILLUSTRATIONS. — Illustrations useful in maintaining this functional section are: figures 4-7, 4-8, 5-8, 5-9, 5-11, 5-46, and 5-63.

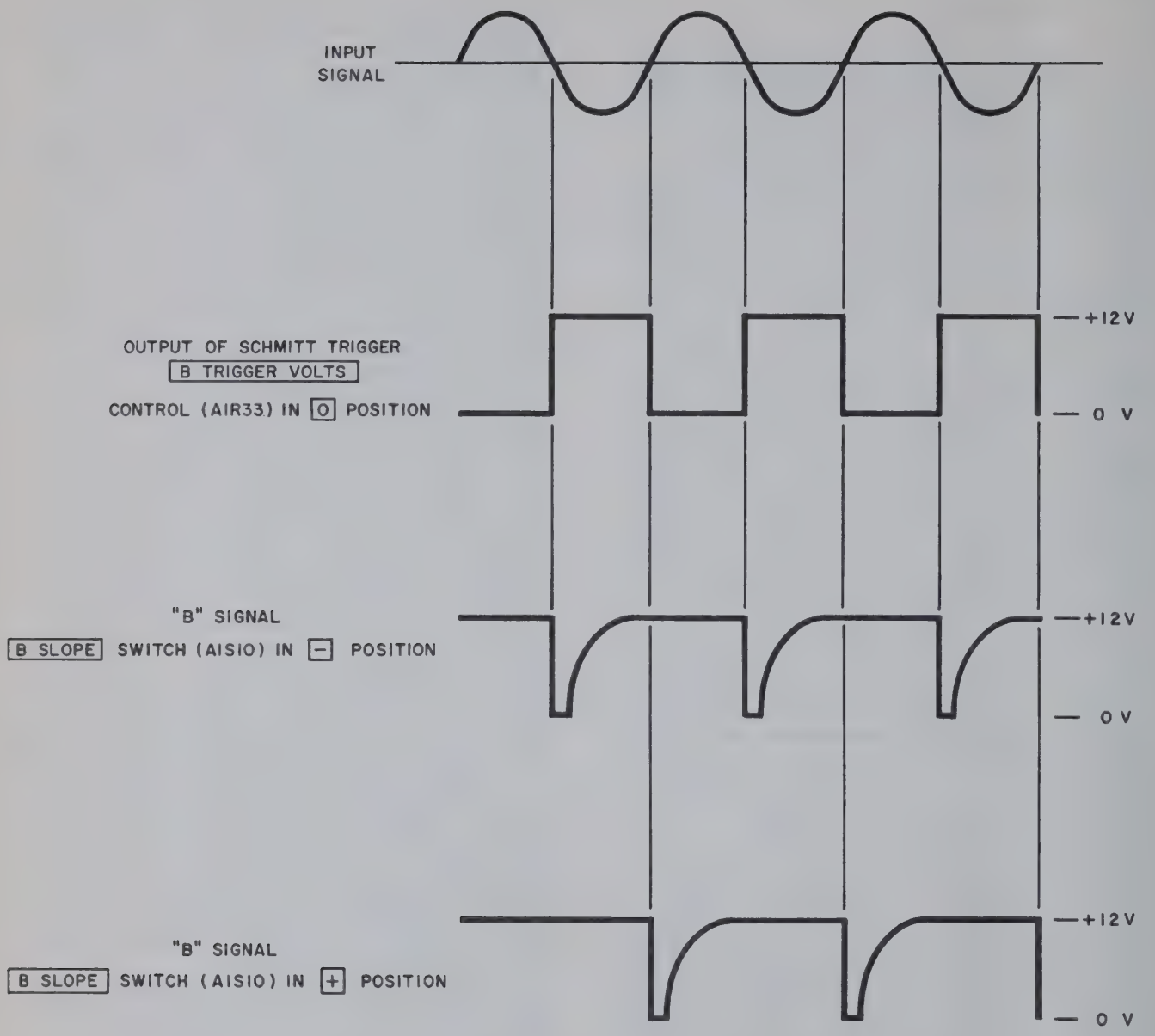

Figure 4-7. "B" Amplifier, Trigger Point Waveforms

TABLE 4-7. B AMPLIFIER TROUBLE SHOOTING

STEP	ACTION	RESULTS	NEXT STEP
1	Set the controls on the front panel of the counter as follows: POWER switch to TRACK. Mode selector switch to SEP. B MULTIPLIER switch to 10. B TRIGGER VOLTS control to 0.	Waveform is correct.	2
		If waveform is incorrect or absent, check A1A11Q1, A1A22R27, A1A22R28, A1A22C36, and A1C33.	

TABLE 4-7. (Continued)

STEP	ACTION	RESULTS	NEXT STEP
1 (cont)	Apply a 10-volt rms, 1000-cps sine-wave signal to the B AC connector. Observe the waveform at test point A and compare with that shown in figure 4-8.		
2	Change B MULTIPLIER switch to 3 and amplitude of input signal to 3 volts rms. Observe the waveform at test point A and compare with that shown in figure 4-8.	Waveform is correct.	3
		If waveform is incorrect or absent, check A1A22R25 and A1A22R26.	
3	Change B MULTIPLIER switch to 1 and amplitude of input signal to 1 volt rms. Observe the waveform at test point A and compare with that shown in figure 4-8.	Waveform is correct.	4
		If waveform is incorrect or absent, check A1A22R23, A1A22R24, and A1A22C35.	
4	Change B MULTIPLIER switch to . 3 and amplitude of input signal to 0. 3 volt rms. Observe the waveform at test point A and compare with that shown in figure 4-8.	Waveform is correct.	5
		If waveform is incorrect or absent, check A1A22R21, A1A22R22, and A1A22C34.	
5	Change B MULTIPLIER switch to . 1 and amplitude of input signal to 0. 1 volt rms. Observe the waveform at test point A and compare with that shown in figure 4-8.	Waveform is correct.	6
		If waveform is incorrect or absent, check A1A22R50 and A1A22C46.	
6	Rotate B TRIGGER VOLTS control throughout its range, observe the waveform at test point B and compare with that shown in figure 4-8.	Waveform remains correct as B TRIGGER VOLTS control is rotated.	7
		If waveform is incorrect or disappears when B TRIGGER VOLTS control is rotated, check adjustment of amplifiers A1A11Q2, A1A11Q3, A1A11Q4, A1A11CR1, A1A11CR2, and A1A11CR3.	
7	Set B TRIGGER VOLTS control to 0, observe the waveform at test point C and compare with that shown in figure 4-8.	Waveform is correct.	8
		If waveform is incorrect check, A1A11Q5, A1A11Q6, and A1A11CR4.	
8	Set B SLOPE switch to +, observe the waveform at test point D and compare with that shown in figure 4-8.	Waveform is correct.	9
		If waveform is incorrect check, A1A11Q7, A1A11CR5, A1A11CR6, and A1A11CR7.	
9	Change B SLOPE switch from + to −, observe the waveform at test point 1 and compare with that shown in figure 4-8.	If waveform remains correct when B SLOPE switch is in either position, check loading of B amplifier.	
		If waveform is incorrect, check A1A11Q8, A1A11CR8, A1A11CR9, and A1A11CR10.	

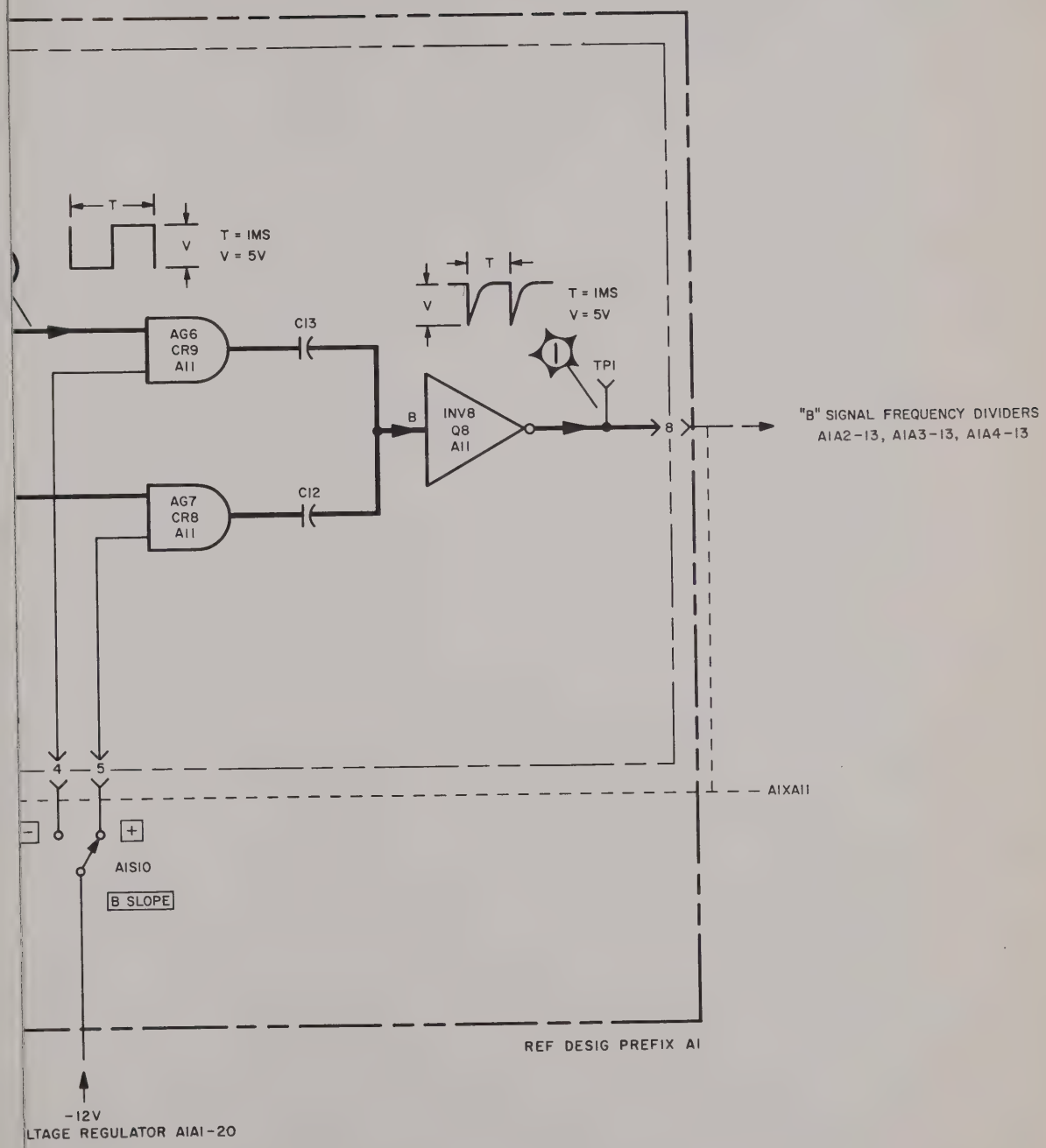

Figure 4-8. "B" Amplifier, Functional and Servicing Block Diagram

NOTES

1. Primary signal paths weighted. Feedback paths weighted and dashed.
2. ——— — — ——— indicates assembly boundaries.
3. Names of panel controls and connectors are enclosed in boxes.
4. Dc voltages are preceded by "+" or "–".
5. Waveforms recorded with an AN/USM-140B Oscilloscope.

   Control settings:

   Sensitivity: 2 v/cm.
   Sweep time: 1 ms/cm.

6. Explanation of symbols placed at waveforms:

   T – Duration of the portion of waveform indicated.
   V – Peak-to-peak voltage.

7. Dc voltages are measured with a CCUH-801 Dc Differential Voltmeter.
8. The letters CCW, placed adjacent to the appropriate terminals of A1A22R33, indicate the direction of rotation viewed from the end shaft.
9. Abbreviations within logic or circuit blocks are as follows:

AG	AND Gate
AMPL	Amplifier
DA	Differential Amplifier
INV	Inverter
ST	Schmitt Trigger

   Identification within logic blocks is as follows: The first line identifies the logic function symbol on the drawing. The symbols are numbered in general data flow sequence. The second line identifies the major parts associated with the logic function. The third line identifies the assembly containing the logic function.

10. Letters and numbers outside of some logic or circuit blocks indicate transistor elements.
11. Operating control settings:

    POWER switch to TRACK.
    Mode selector switch to SEP.
    B MULTIPLIER switch to 10 with 10 v rms applied to B AC connector.
    B MULTIPLIER switch to 3 with 3 v rms applied to B AC connector.
    B MULTIPLIER switch to 1 with 1 v rms applied to B AC connector.
    B MULTIPLIER switch to .3 with 0.3 v rms applied to B AC connector.
    B MULTIPLIER switch to .1 with 0.1 v rms applied to B AC connector.
    B TRIGGER VOLTS control to 0.
    B SLOPE switch to + to produce waveform at D.

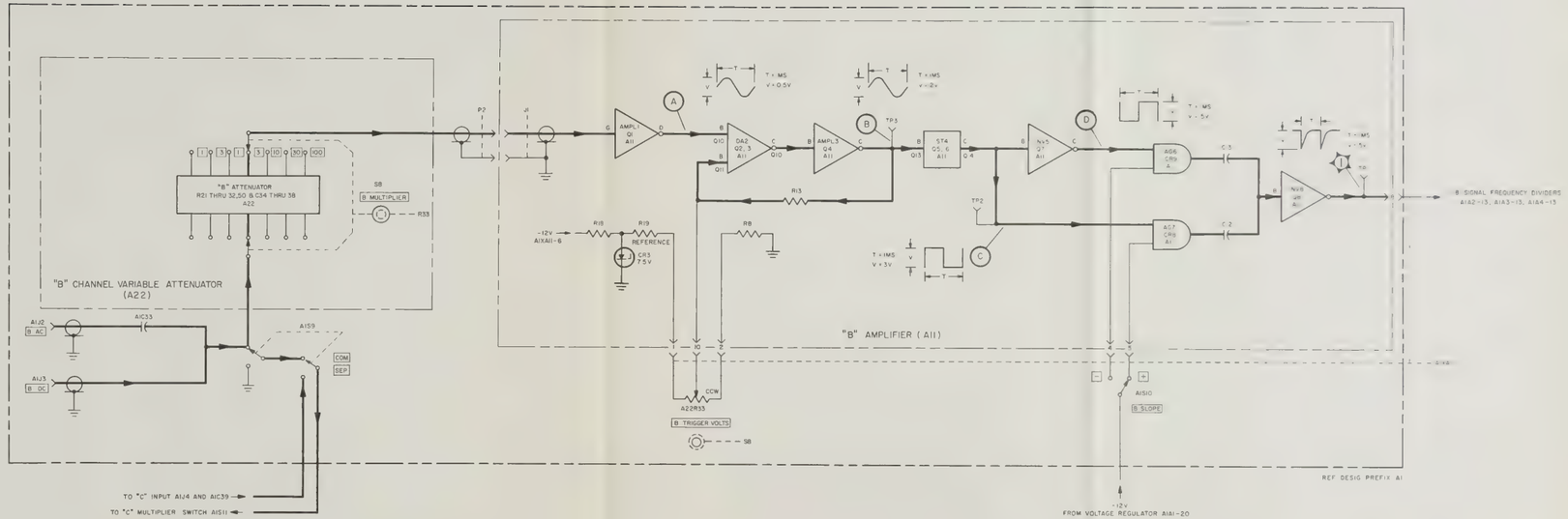

Figure 4-8. "B" Amplifier, Functional and Servicing Block Diagram

4-8. C AMPLIFIER.

a. C AMPLIFIER FUNCTIONAL DESCRIPTION. — The C amplifier consists of the channel C variable attenuator and trigger level control A1A23, and part of af-rf amplifier A1A11. The channel C variable attenuator is mounted on the front-panel C MULTIPLIER switch; the af-rf amplifier is constructed on one-half of printed circuit board assembly A1A11. This functional section receives the C input signal from the C AC and C DC input connectors, attenuates, amplifies, and shapes this signal for use throughout the counter. The C amplifier functional and servicing block diagram is shown in figure 4-9.

The C DC input is direct-coupled through the attenuator to the C coaxial connector J2 on A1A11. The C AC input is capacity-coupled by A1C39 to the same point. Signals appearing at the C coaxial connector on A1A11 are coupled to the gate terminal of field-effect-transistor A1A11Q9. This stage (AMPL9) presents a high input impedance to low frequency input signals. The output of this stage is coupled to differential amplifier DA10 consisting of A1A11Q10 and A1A11Q11. The output of A1A11Q10 is applied to dc amplifier AMPL11 consisting of A1A11Q12. A portion of the output of this stage is fed back through A1A11R50 to A1A11Q11. This feedback stabilizes the differential amplifier over changes in temperature and transistor characteristics. The output of A1A11Q12 is also applied to A1A11Q13. This transistor is part of Schmitt-trigger stage ST12 which provides a pulse output to the remainder of the amplifier.

The differential amplifier, dc amplifier, and Schmitt trigger make up the trigger circuits for the C input. The input signal to the Schmitt trigger can be made to vary about a dc level by the dc bias voltage variations on the base of A1A11Q11. This variable bias voltage is supplied by the C TRIGGER VOLTS control A1R46. Since the trigger points of the Schmitt trigger are fixed, the points on the input signal which cause the Schmitt trigger to change states can be varied by adjusting the C TRIGGER VOLTS control. The range of this control is sufficient to vary the trigger points of the Schmitt trigger over the complete waveform of any signal within the dynamic range of the amplifier.

The output of the Schmitt trigger is applied to AND gate AG15 and to inverter INV13 consisting of A1A11Q15. The output of the inverter is applied to another AND gate, AG14. Both AND gates are controlled by the C SLOPE switch A1S12. When this switch is set to +, the output of the Schmitt trigger is capacity-coupled through AG15 to the output inverter INV8 consisting of A1A11Q16. When the B SLOPE switch is set to −, the output of INV13 is capacity-coupled through AG14 to INV8. The two AND gates and the C SLOPE switch have the effect of selecting either the positive or negative slope of the input waveform for ultimately triggering the output inverter. The relationships of a typical sine-wave input signal to the amplifier output signal for all variations of trigger level polarity and slope selection are identical to those shown for the B amplifier in figure 4-7.

b. C AMPLIFIER TROUBLE SHOOTING. — Problems in the C amplifier fall into three categories: (1) problems in the attenuator assembly, (2) problems in the trigger voltage adjustment stages, and (3) problems in the slope selection stages. Table 4-8 is a trouble-shooting chart for the C amplifier. Some of the problems mentioned can be caused by improper adjustment of the amplifier. Before starting the trouble-shooting procedure check that the amplifier is properly adjusted. The procedure for adjusting the amplifier is given in paragraph 5-4h.

Problems in the attenuator assembly usually result from opened or shorted parts due to application of excessive voltages to the C AC or C DC inputs. The coupling capacitor at the C AC input is a 600-volt unit, and may be damaged if voltages greater than this are applied. If the amplifier does not produce an output in certain positions of the C MULTIPLIER switch, check the parts involved in that switch position.

Problems in the trigger voltage adjustment stages will be either the field-effect transistor stage AMPL9, differential amplifier DA10, dc amplifier stage AMPL11, or Schmitt trigger ST12. In trouble shooting for problems in these stages it is most efficient to follow the signal through the amplifier until the faulty stage is located. When it is located, check the individual parts in detail.

Problems in the slope selection stages will be either in inverter stages INV13 and INV16, or in AND gates AG14 and AG15. If a part in the amplifier is replaced, readjust the assembly according to the procedure of paragraph 5-4h.

c. USEFUL ILLUSTRATIONS. — Illustrations useful in maintaining this functional section are: figures 4-9, 5-8, 5-9, 5-12, 5-46, and 5-64.

TABLE 4-8. C AMPLIFIER TROUBLE SHOOTING

STEP	ACTION	RESULTS	NEXT STEP
1	Set the controls on the front panel of the counter as follows: POWER switch to TRACK. Mode selector switch to SEP. C MULTIPLIER switch to 10. C TRIGGER VOLTS control to 0.	Waveform is correct.	2
		If waveform is incorrect or absent, check A1A11Q9, A1A23R40, A1A23R41, A1A3C39, and A1A23C42.	

TABLE 4-8. (Continued)

STEP	ACTION	RESULTS	NEXT STEP
1 (cont)	Apply a 10 volt rms, 1000-cps sine-wave signal to the C AC connector. Observe the waveform at test point E and compare with that shown in figure 4-9.		
2	Change C MULTIPLIER switch to 3 and amplitude of input signal to 3 volts rms. Observe the waveform at test point E and compare with that shown in figure 4-9.	Waveform is correct.	3
		If waveform is incorrect or absent, check A1A23R38, and A1A23R39.	
3	Change C MULTIPLIER switch to 1 and amplitude of input signal to 1 volt rms. Observe the waveform at test point E and compare with that shown in figure 4-9.	Waveform is correct.	4
		If waveform is incorrect or absent, check A1A23R36, A1A23R37, and A1A23C41.	
4	Change C MULTIPLIER switch to .3 and amplitude of input signal to 0.3 volt rms. Observe the waveform at test point E and compare with that shown in figure 4-9.	Waveform is correct.	5
		If waveform is incorrect or absent, check A1A23R34, A1A23R35, and A1A23C40.	
5	Change C MULTIPLIER switch to .1 and amplitude of input signal to 0.1 volt rms. Observe the waveform at test point E and compare with that shown in figure 4-9.	Waveform is correct.	6
		If waveform is incorrect or absent, check A1A23R51 and A1A23C47.	
6	Rotate C TRIGGER VOLTS control throughout its range, observe the waveform at test point F and compare with that shown in figure 4-9.	Waveform remains correct as C TRIGGER VOLTS control is rotated.	7
		If waveform is incorrect or disappears when C TRIGGER VOLTS control is rotated, check adjustment of amplifiers A1A11Q10, A1A11Q11, A1A11Q12, A1A11CR11, A1A11CR12, and A1A11CR13.	
7	Set C TRIGGER VOLTS control to 0, observe the waveform at test point G and compare with that shown in figure 4-9.	Waveform is correct.	8
		If waveform is incorrect, check A1A11Q13, A1A11Q14, and A1A11CR14.	
8	Set C SLOPE switch to +, observe the waveform at test point H and compare with that shown in figure 4-9.	Waveform is correct.	9
		If waveform is incorrect, check A1A11Q15, A1A11CR15, A1A11CR16, and A1A11CR17.	
9	Change C SLOPE switch from + to −, observe the waveform at test point 2 and compare with that shown in figure 4-9.	If waveform remains correct when C SLOPE switch is in either position, check loading of C amplifier.	
		If waveform is incorrect, check A1A11Q16, A1A11CR18, A1A11CR19, and A1A11CR20.	

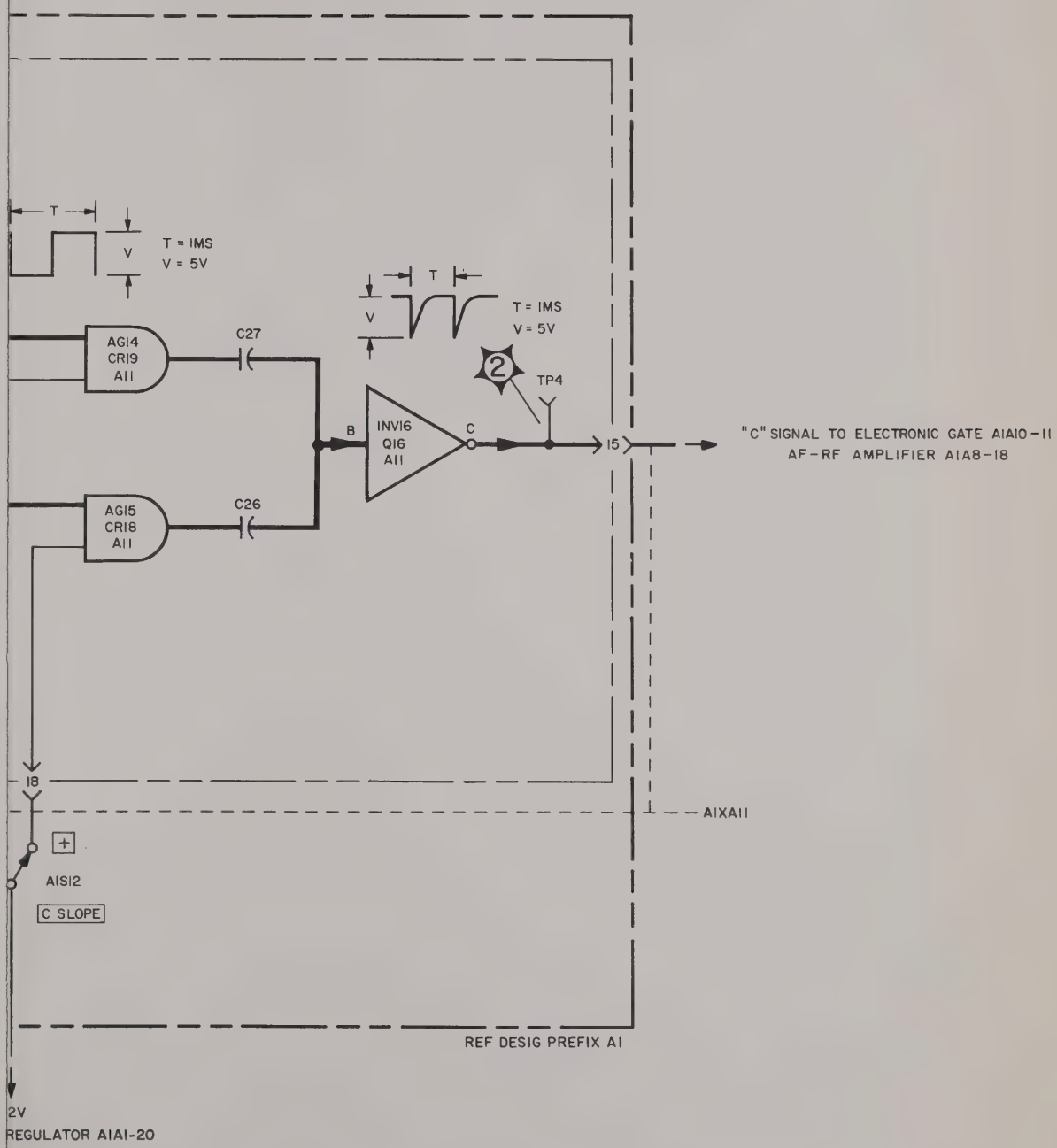

Figure 4-9. "C" Amplifier, Functional and Servicing Block Diagram

TABLE 4-8. (Continued)

STEP	ACTION	RESULTS	NEXT STEP
1 (cont)	Apply a 10 volt rms, 1000-cps sine-wave signal to the C AC connector. Observe the waveform at test point E and compare with that shown in figure 4-9.		
2	Change C MULTIPLIER switch to 3 and amplitude of input signal to 3 volts rms. Observe the waveform at test point E and compare with that shown in figure 4-9.	Waveform is correct.	3
		If waveform is incorrect or absent, check A1A23R38, and A1A23R39.	
3	Change C MULTIPLIER switch to 1 and amplitude of input signal to 1 volt rms. Observe the waveform at test point E and compare with that shown in figure 4-9.	Waveform is correct.	4
		If waveform is incorrect or absent, check A1A23R36, A1A23R37, and A1A23C41.	
4	Change C MULTIPLIER switch to .3 and amplitude of input signal to 0.3 volt rms. Observe the waveform at test point E and compare with that shown in figure 4-9.	Waveform is correct.	5
		If waveform is incorrect or absent, check A1A23R34, A1A23R35, and A1A23C40.	
5	Change C MULTIPLIER switch to .1 and amplitude of input signal to 0.1 volt rms. Observe the waveform at test point E and compare with that shown in figure 4-9.	Waveform is correct.	6
		If waveform is incorrect or absent, check A1A23R51 and A1A23C47.	
6	Rotate C TRIGGER VOLTS control throughout its range, observe the waveform at test point F and compare with that shown in figure 4-9.	Waveform remains correct as C TRIGGER VOLTS control is rotated.	7
		If waveform is incorrect or disappears when C TRIGGER VOLTS control is rotated, check adjustment of amplifiers A1A11Q10, A1A11Q11, A1A11Q12, A1A11CR11, A1A11CR12, and A1A11CR13.	
7	Set C TRIGGER VOLTS control to 0, observe the waveform at test point G and compare with that shown in figure 4-9.	Waveform is correct.	8
		If waveform is incorrect, check A1A11Q13, A1A11Q14, and A1A11CR14.	
8	Set C SLOPE switch to +, observe the waveform at test point H and compare with that shown in figure 4-9.	Waveform is correct.	9
		If waveform is incorrect, check A1A11Q15, A1A11CR15, A1A11CR16, and A1A11CR17.	
9	Change C SLOPE switch from + to −, observe the waveform at test point 2 and compare with that shown in figure 4-9.	If waveform remains correct when C SLOPE switch is in either position, check loading of C amplifier.	
		If waveform is incorrect, check A1A11Q16, A1A11CR18, A1A11CR19, and A1A11CR20.	

NOTES

1. Primary signal paths weighted. Feedback paths weighted and dashed.
2. ——— — ——— indicates assembly boundaries.
3. Names of panel controls and connectors are enclosed in boxes.
4. Dc voltages are preceded by "+" or "−".
5. Waveforms recorded with an AN/USM-140B Oscilloscope.

   Control settings:

   Sensitivity: 2 v/cm.
   Sweep time: 1 ms/cm.

6. Explanation of symbols placed at waveforms:

   T – Duration of the portion of waveform indicated.
   V – Peak-to-peak voltage.

7. Dc voltages are measured with a CCUH-801 Dc Differential Voltmeter.
8. The letters CCW, placed adjacent to the appropriate terminals of A1A23R46 potentiometer, indicate the direction of rotation viewed from the shaft end.
9. Abbreviations within logic or circuit blocks are as follows:

AG	AND Gate
AMPL	Amplifier
DA	Differential Amplifier
INV	Inverter
ST	Schmitt Trigger

   Identification within logic blocks is as follows: The first line identifies the logic function symbol on the drawing. The symbols are numbered in general data flow sequence. The second line identifies the major parts associated with the logic function. The third line identifies the assembly containing the logic function.

10. Letters and numbers outside of some logic or circuit blocks indicate transistor elements.
11. Operating control settings:

    POWER switch to TRACK.
    Mode selector switch to SEP.
    C MULTIPLIER switch to 10 with 10 v rms applied to C AC connector.
    C MULTIPLIER switch to 3 with 3 v rms applied to C AC connector.
    C MULTIPLIER switch to 1 with 1 v rms applied to C AC connector.
    C MULTIPLIER switch to .3 with 0.3 v rms applied to C AC connector.
    C MULTIPLIER switch set to .1 with 0.1 v rms applied to C AC connector.
    C TRIGGER VOLTS control to 0.
    C SLOPE switch to + to produce waveform at H.

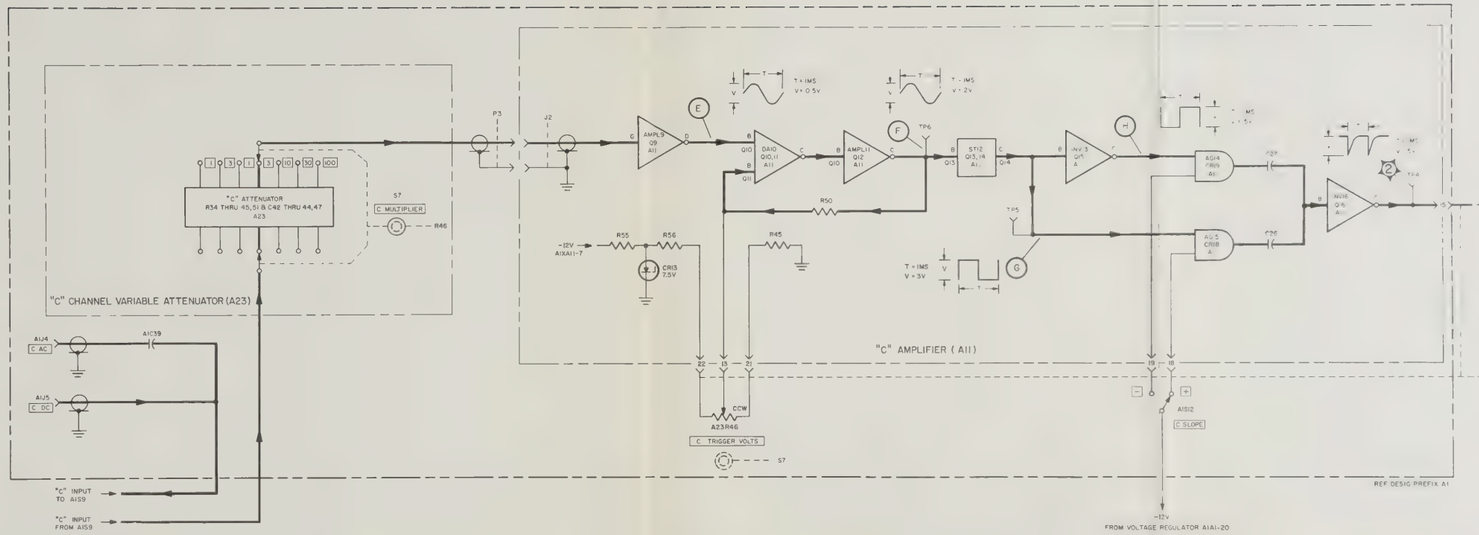

Figure 4-9. "C" Amplifier, Functional and Servicing Block Diagram

4-9. 10 MC AND 1 MC MULTIPLIER.

a. 10 MC AND 1 MC MULTIPLIER FUNCTIONAL DESCRIPTION. — The 10 mc and 1 mc multiplier receives the 1-mc standard frequency produced by the radio frequency oscillator or an external 100-kc or 1-mc standard frequency. The multiplier amplifies, multiplies, and shapes these signals to produce the 1-mc and 10-mc standard frequencies used throughout the counter. It is a separate assembly constructed entirely on printed circuit board A1A6. Figure 4-10 shows the functional relationship of all circuits in the multiplier and gives test points and waveforms as an aid in trouble shooting.

The input stage of the multiplier accepts either a 100-kc or 1-mc input signal. Resistor network A1A6R1 through A1A6R4 at the base of A1A6Q1 prevents damage to this transistor from the application of excessive dc levels (up to 600 v) to the input. The output of this stage is amplified further by A1A6Q2.

These two stages operate in the same way with either 100-kc or 1-mc inputs. The third stage, A1A6Q3, operates with a 500-kc tuned tank circuit as its load. When the input is a 100-kc signal, it multiplies that frequency by 5, producing a 500-kc signal at the collector of A1A6Q3. When the input is a 1-mc signal, it is passed with no multiplication. The output of A1A6Q3 is further amplified by a two-stage amplifier consisting of A1A6Q4 and A1A6Q5.

The following stage, A1A6Q6, is a 1-mc tuned amplifier. When the input to this stage is 500 kc, the signal is multiplied by 2 to 1 mc. When the input to this stage is 1 mc, the signal passes without multiplication. The output of A1A6Q6 is further amplified by tuned amplifier stages A1A6Q7 and A1A6Q8, eliminating the 1-kc and 500-kc components from the 1-mc signal. The output of A1A6Q8 is amplified in amplifier A1A6Q9, passed through emitter follower A1A6Q10, and applied as the 1-mc frequency standard to the frequency dividers.

The output of A1A6Q8 is, in addition, applied to emitter follower A1A6Q11, and serves as the 1-mc fundamental from which the 10-mc signal is derived. Phase splitter A1A6Q12 provides two 1-mc outputs; one output is in-phase with the output of A1A6Q11, and the other is 180 degrees out-of-phase. The two outputs of the phase splitter are full-wave rectified by diodes A1A6CR7 and A1A6CR8, and combined to produce a 2-mc signal. Tuned amplifier A1A6Q13 amplifies this 2-mc signal and removes the 1-mc component. Clippers A1A6CR7 and A1A6CR8 increase the harmonic content of the 2-mc signal. Multiplier A1A6Q14 increases the 10-mc component of the clipped signal.

The output of A1A6Q14 is further amplified by tuned stages A1A6Q15 and A1A6Q16, eliminating the 2-mc components from the 10-mc signal. The output of A1A6Q16 is applied to two separate branches. In one branch it is passed through emitter followers A1A6Q19 and A1A6Q20 and terminated on pin 6 of XA1A6. This signal serves as the 10-mc input to the frequency converter. In the other branch the signal is amplified by amplifier A1A6Q17, passed through emitter follower A1A6Q18 and terminated on pin 2 and 3 of XA1A6. The signal terminated on pin 2 serves as the 10-mc standard frequency applied to A1S2. The signal terminated on pin 3 serves as the 10-mc test signal applied to the count control.

b. 10 MC AND 1 MC MULTIPLIER TROUBLE SHOOTING. — Problems in the 10-mc and 1-mc multiplier fall into four categories: (1) absence of 1-mc output; (2) absence of 10-mc output; (3) improper 1-mc output waveform; and (4) improper 10-mc output waveform. Table 4-9 is a trouble-shooting chart for the 1-mc and 10-mc multiplier. Separate procedures are given for the 1-mc and 10-mc multipliers. All the problems mentioned above can be caused by improper tuning of one or more stages of the multiplier. Before the trouble-shooting procedure is started, check each stage for proper adjustment. The procedure for adjusting the multiplier is given in paragraph 5-4e. The most efficient method for isolating a problem in the multiplier is to follow the signal from stage to stage. When a stage is found where the signal disappears or becomes distorted, check the parts associated with that stage.

The output amplitude of Q1 is approximately the same with either the 100-kc or 1-mc input.

Amplifiers A1A6Q2, A1A6Q5, and A1A6Q13 drive multiplier stages, and must have collector waveforms of the proper repetition rate with negative edges falling in less than 50 nanoseconds.

Table 4-9 is the 10-mc and 1-mc multiplier trouble-shooting chart. In this table the specified input frequency is 100 kc. If the 1-mc multiplier is adjusted and working properly with this input frequency, it will also work properly with a 1-mc input frequency. If any tank circuit is adjusted in the process of trouble shooting or if a component is found to be faulty and is replaced, the entire multiplier must be adjusted. The procedure for adjusting the multiplier is given in paragraph 5-4e.

c. USEFUL ILLUSTRATIONS. — Illustrations useful in maintaining this functional section are: figures 4-10, 5-41, and 5-65.

TABLE 4-9. 10 MC AND 1 MC MULTIPLIER TROUBLE SHOOTING

STEP	ACTION	RESULTS	NEXT STEP
1 MC MULTIPLIER			
1	Set POWER switch to TRACK and REF FREQ 100 KC OR 1 MC switch to EXT. Apply a 0.5-volt rms, 100-kc signal to time base INPUT connector, observe waveform at test point A and compare with that shown in figure 4-10.	Waveform is correct.	2
		If waveform is incorrect check A1A6Q1.	
2	Observe waveform at test point B and compare with that shown in figure 4-10.	Waveform is correct. (Negative edge falling in less than 50 nanoseconds.)	3
		If waveform is incorrect, check A1A6CR1 and A1A6Q2.	
3	Observe waveform at test point C and compare with that shown in figure 4-10.	Waveform is correct. (Negative edge falling in less than 50 nanoseconds.)	4
		If waveform is incorrect, check A1A6CR2, A1A6CR3, A1A6Q3, A1A6Q4, and A1A6Q5. Readjust A1A6C7.	
4	Observe waveform at test point D and compare with that shown in figure 4-10.	Waveform is correct. (Negative edge falling in less than 50 nanoseconds.)	5
		If waveform is incorrect, check A1A6CR4, A1A6Q6, and A1A6L2. Readjust A1A6L2.	
5	Observe waveform at test point E and compare with that shown in figure 4-10.	Waveform is correct.	6
		If waveform is incorrect, check A1A6Q7, A1A6Q8, A1A6L3, and A1A6L4. Readjust A1A6L3 and A1A6L4.	
6	Observe waveform at test point 1 and compare with that shown in figure 4-10.	Waveform is correct.	7
		If waveform is incorrect, check A1A6CR6, A1A6Q9, and A1A6Q10.	

TABLE 4-9. (Continued)

STEP	ACTION	RESULTS	NEXT STEP
		10 MC MULTIPLIER	
7	Observe waveform at test point F and compare with that shown in figure 4-10.	Waveform is correct. (Negative edge falling in less than 50 nanoseconds.)	8
		If waveform is incorrect, check A1A6CR7, A1A6CR8, A1A6CR9, A1A6CR10, A1A6Q11, A1A6Q12, and A1A6Q13.	
8	Observe waveform at test point G and compare with that shown in figure 4-10.	Waveform is correct. (Negative edge falling in less than 50 nanoseconds.)	9
		If waveform is incorrect, check A1A6L6, A1A6L7, A1A6L8, A1A6Q14, A1A6Q15, and A1A6Q16. Readjust A1A6L6, A1A6L7, and A1A6L8.	
9	Observe waveform at test point 2.	Waveform is correct. (Negative edge falling in less than 50 nanoseconds.)	10
		If waveform is incorrect, check A1A6Q19 and A1A6Q20.	
10	Observe waveform at test point 3.	If waveform is incorrect, check A1A6CR11, A1A6CR12, A1A6Q17, and A1A6Q18.	

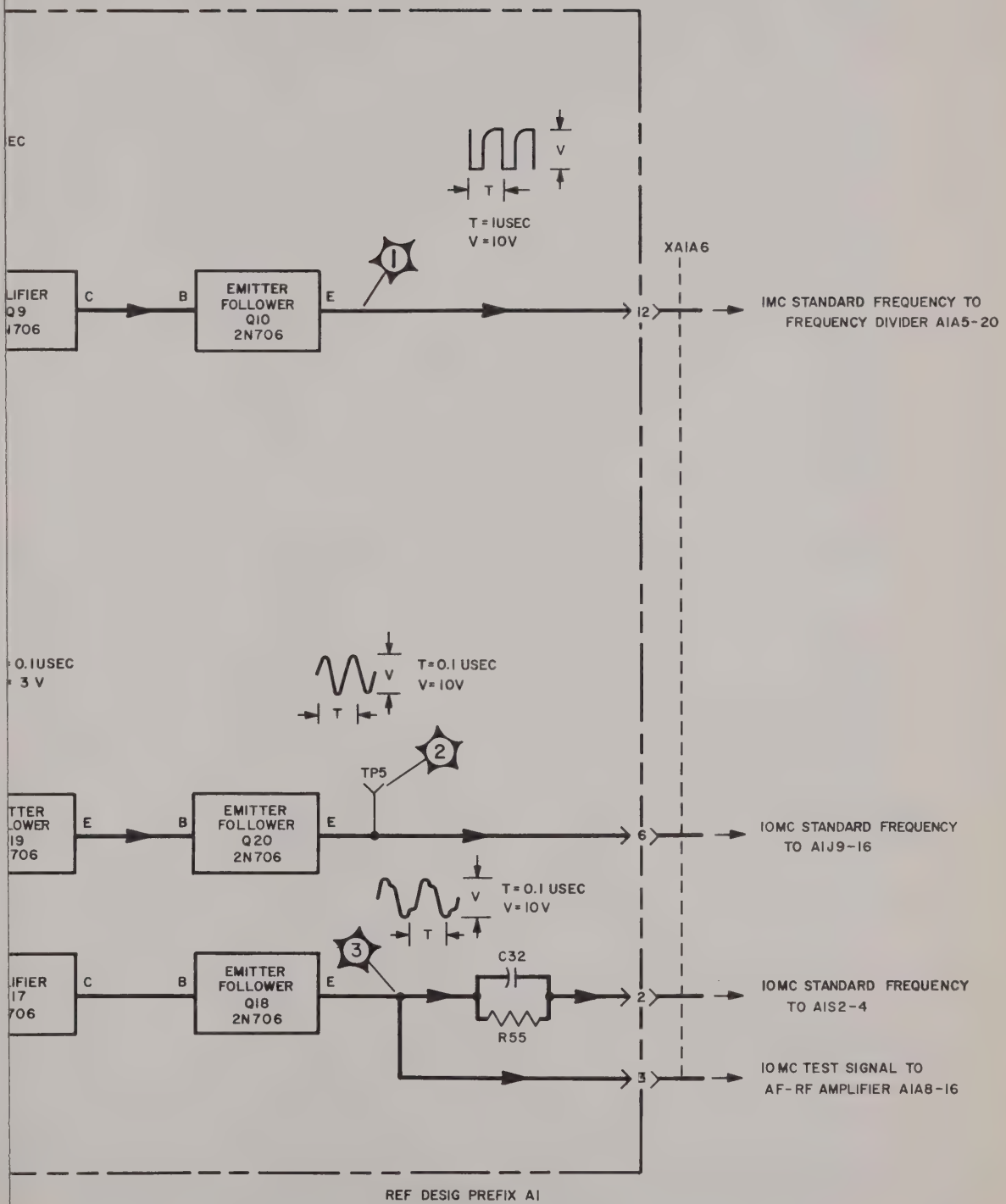

Figure 4-10. 10 Mc and 1 Mc Multiplier, Functional and Servicing Block Diagram

NOTES

1. Primary signal paths weighted.
2. ——— — — ——— indicates assembly boundaries.
3. Names of panel controls and connectors are enclosed in boxes.
4. Dc voltages are preceded by "+" or "−".
5. Waveforms recorded with an AN/USM-140B Oscilloscope.

   Control settings:

   Sensitivity: 5 v/cm.
   Sweep time: 1 μs/cm, 0.1 μs/cm.
6. Explanation of symbols placed at waveforms:

   T − Duration of the portion of waveform indicated.
   V − Peak-to-peak voltage.
7. Dc voltages are measured with a CCUH-801 Dc Differential Voltmeter.
8. Letters outside of circuit blocks indicate transistor or diode elements.
9. Operating control settings:

   POWER switch to TRACK.
   REF FREQ switch to EXT.
10. T = 10 μs when 100-kc input is used.
    T = 1 μs when 1-mc input is used.
11. T = 2 μs when 100-kc input is used.
    T 1 μs when 1-mc input is used.

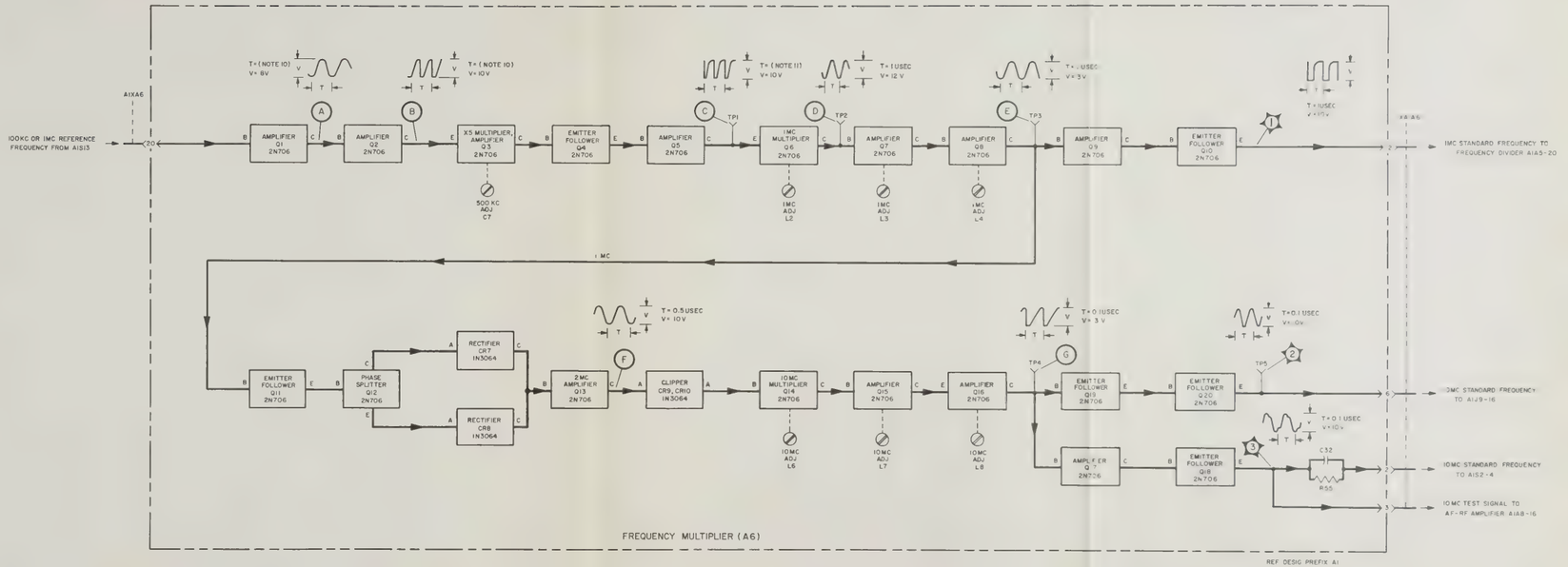

Figure 4-10. 10 Mc and 1 Mc Multiplier, Functional and Servicing Block Diagram

4-10. SCALER.

a. SCALER FUNCTIONAL DESCRIPTION. — The scaler functional section consists of two types of decade frequency dividers. The first type is capable of operating at a 1-mc rate; one of this type is included in the counter. It is constructed on printed circuit board A1A5. The second type is capable of operating at a 300-kc rate; six of this type are included in the counter. These six dividers are constructed in pairs on printed circuit boards A1A2, A1A3, and A1A4. Figure 4-15 shows the functional relationship of all circuits in the scaler and gives test points and waveforms as an aid in trouble shooting.

Each frequency divider consists of four bi-stable multivibrators (flip-flops) coupled together in such a way so as to produce one output pulse for each ten input pulses. Figure 4-11 shows a typical flip-flop.

The input to the flip-flop is applied at the junction of capacitors C1 and C2, and the output is taken at the collector of Q2. Resistors R1 and R2 form steering networks which steer input pulses to the base of the saturated transistor. These pulses cut off the saturated transistor and cause the flip-flop to change state. The resulting output is a train of pulses with half the repetition rate of the input pulses. Diodes CR1 and CR2 are used in some flip-flops to permit a higher counting rate.

Figure 4-12 is a simplified schematic diagram, showing a method of coupling the four flip-flops together to provide one output pulse for each ten input pulses. Figure 4-13 shows the idealized waveforms at the output of each flip-flop. At the count of zero, Q1, Q2, Q3, and Q5 are saturated and their collectors are at approximately zero volts. Diodes CR1 and CR2 form an AND gate at the input to the Q2-side of the "2" flip-flop. This AND gate prevents the "2" flip-flop and "4" flip-flop from changing state after the eighth input pulse is applied to the frequency divider. Since the Q7 side of the "8" flip-flop is driven directly by the "1" flip-flop, the tenth input pulse causes the "8" flip-flop to change state. This, in effect, causes the "8" flip-flop to change state at the counts of eight and ten. The change of state at the count of ten is used as the divider output. Frequency dividers A1A2 through A1A5 operate in this manner.

The output of each of the six frequency dividers on A1A2 through A1A9 is applied to a gating system. These gating systems are identical, and one is shown

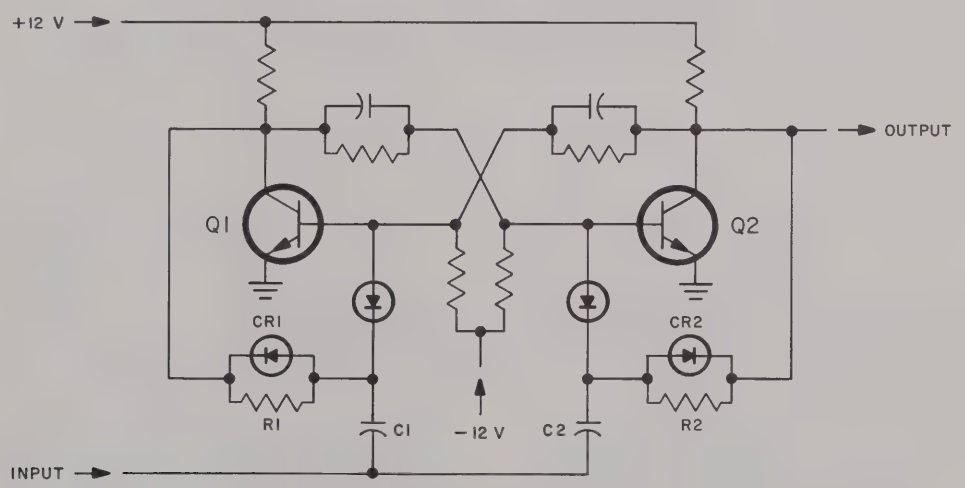

Figure 4-11. Typical Scaler Flip-Flop, Simplified Schematic Diagram

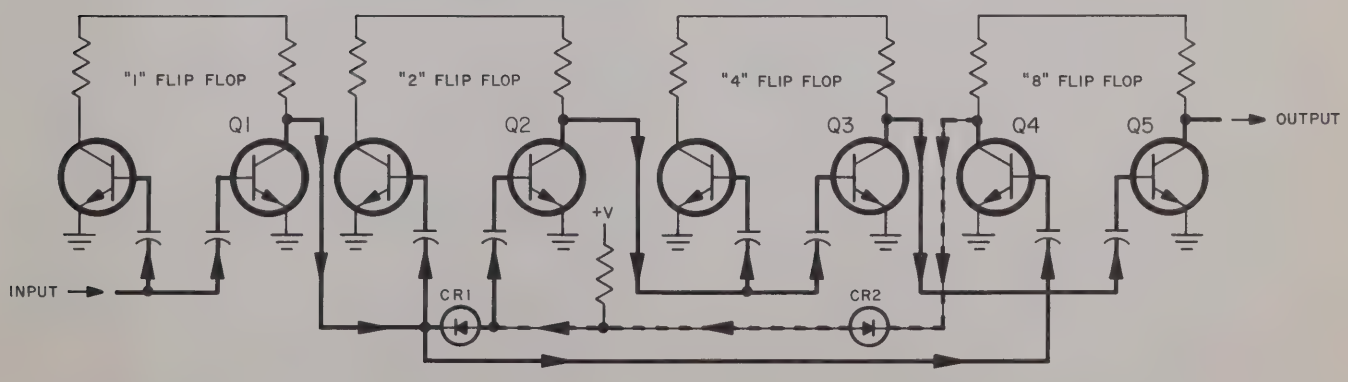

Figure 4-12. Coupled Scaler Flip-Flops, Simplified Schematic Diagram

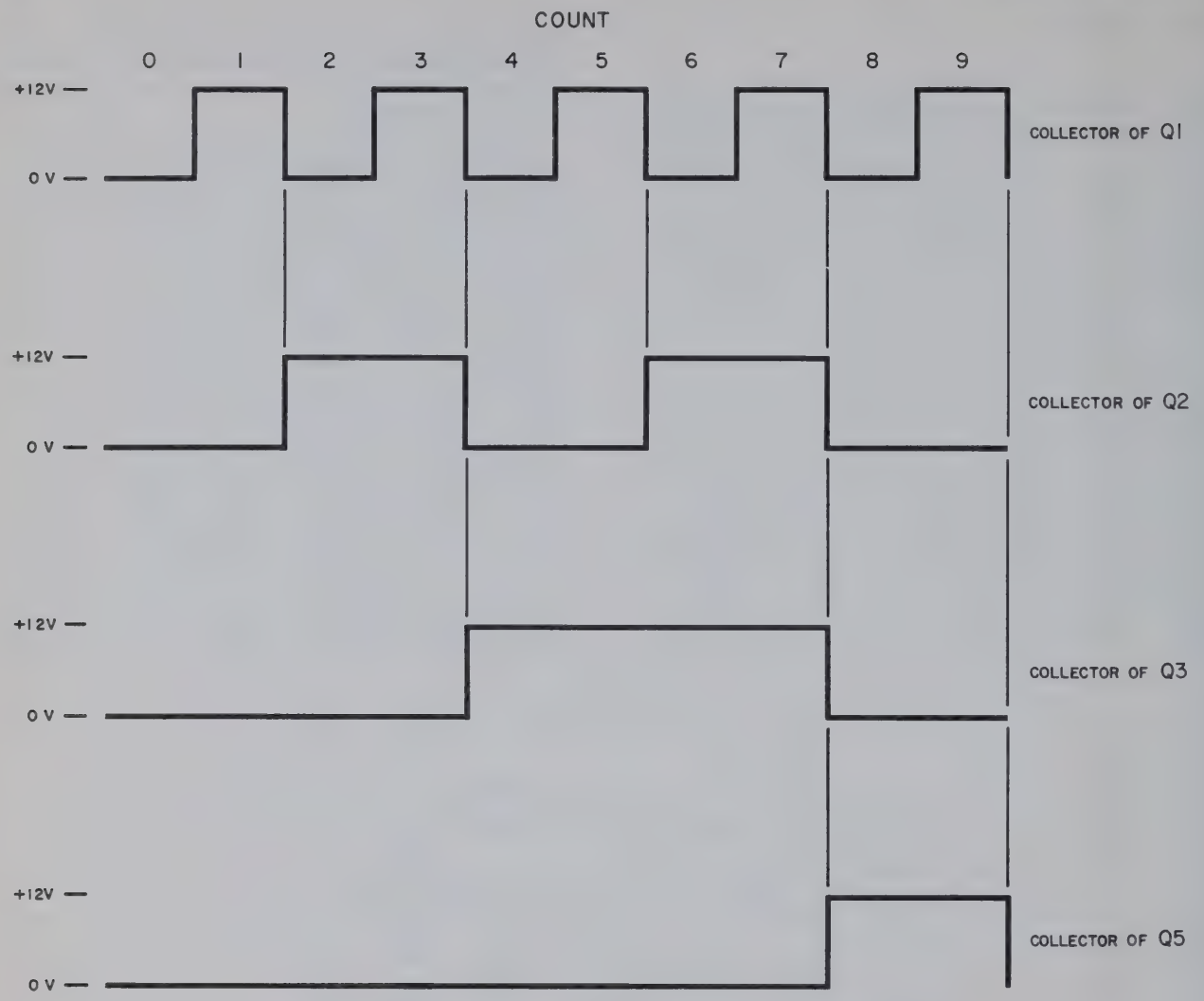

Figure 4-13. Coupled Scaler Flip-Flops, Collector Waveforms

in figure 4-14. The output of the B amplifier is also applied to each gating system. Operation of the gates is as follows: saturation of Q1 causes the output of frequency divider to be applied to the time-base clocking system on frequency divider A1A5; saturation of Q2 causes the divider output to be applied to the input of the following frequency divider; saturation of Q3 causes the output of the B amplifier to be applied to the input of the following frequency divider. These gates allow either the B signal or time-base signals to be routed in the scaler and permit the output of any frequency divider to be sampled for use throughout the counter.

Frequency divider A1A5 divides the 1-mc standard frequency. Its output is applied directly to the input of the following frequency divider A1A4. The time-base clocking system is constructed on a portion of printed circuit board A1A5. This system synchronizes the selected time-base output of A1A2, A1A3 or A1A4, with the 1-mc time-base signal.

The selected time-base output sets the clock flip-flop (FF13), consisting of A1A5Q14 and A1A5Q15, and the output of the "4" flip-flop (FF3) resets it. Since the clocked time-base output is taken from the reset-side of the clock flip-flop, this time-base pulse is always in synchronization with the change of state of the "4" flip-flop. The clock flip-flop is driven by AG6 when the 1-mc time-base is selected, and by AG14 when the 100-kc time base is selected. The standard frequency and scale A frequency output circuits are also located on printed circuit board A1A5. The selected scaled A frequency from the count decades is applied to AG8 and the selected standard frequency from the frequency dividers is applied to AG9. Either of these AND gates can provide the appropriate scaled output to Schmitt trigger ST10. The output of the Schmitt trigger is applied to inverter INV12. The output of this transistor is coupled to the STD FREQ OR SCALE OUT A1J7 on the rear panel of the counter.

b. SCALER TROUBLE SHOOTING. — Problems in the scaler functional section may occur in any one of the following circuits:

(1) The frequency dividers.

(2) The gating circuits following frequency dividers A1A2, A1A3, and A1A4.

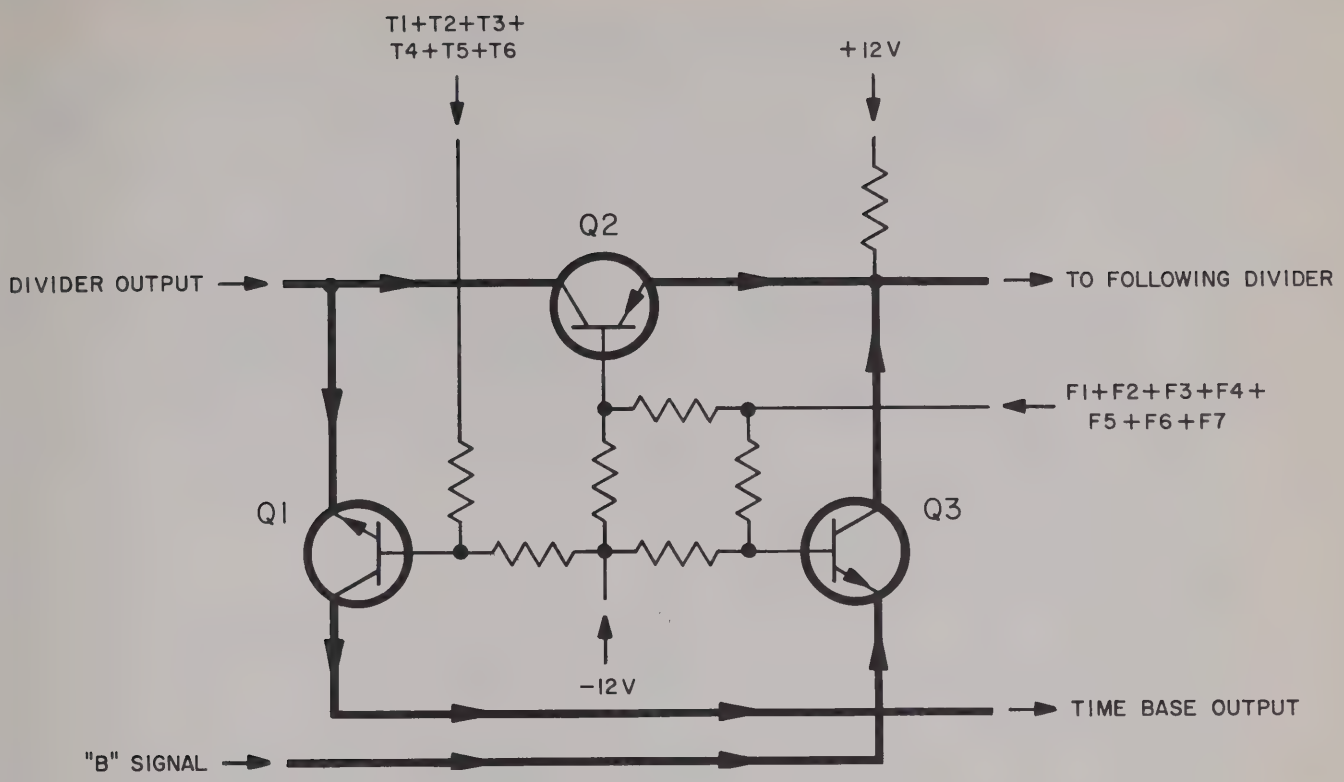

Figure 4-14. Output Gating System, Symplified Schematic Diagram

(3) The time-base clocking circuits.
(4) The scale output circuits.

The trouble-shooting procedures of all the frequency dividers are identical. The first step in trouble shooting these dividers is to check that each flip-flop can be made to change state by shorting the collector of the cutoff transistor to ground. If a flip-flop can be made to change state but does not operate when an input signal is applied, check its triggering circuits. If the divider divides the repetition rate of the input signal by a factor other than ten, check the diodes forming the AND gates at the input to the "2" flip-flop FF2, FF16 or FF24.

Problems in the time base clocking system may occur in the clock flip-flop FF13 or in either the 1-mc time-base gate AG6 or 100-kc time-base gate AG14. The clock flip-flop FF13 may be checked by shorting the collector of the cutoff transistor to ground. This should cause the flip-flop to change state. If it does change state, check the trigger circuits. If the 1-mc and 100-kc time-base gates AG6 and AG14 do not produce a clock signal when they are selected, check transistors A1A5Q16 and A1A5Q17.

Trouble shooting the scale output circuits can be accomplished by following the signal through AG8, AG9, ST10, and INV12 until the faulty stage is located. Once the faulty stage is located, check it in detail. Table 4-10 is the scaler trouble-shooting chart.

c. USEFUL ILLUSTRATIONS. — Illustrations useful in maintaining this functional section are: figures 4-11, 4-12, 4-13, 4-14, 4-15, 5-39, and 5-66.

TABLE 4-10. SCALER TROUBLE SHOOTING

STEP	ACTION	RESULTS	NEXT STEP
	FREQUENCY DIVIDERS A1A2, A1A3, A1A4		
	Note Test point designations in this column refer to test points on the applicable frequency divider.	Note Prefix all reference designations in this column by the assembly number of the applicable frequency divider.	
1	Set the controls on the front panel of the counter as follows: POWER switch to TRACK. FUNCTION switch to MAN START. Observe waveform at test point 1 on faulty frequency divider and compare with that shown in figure 4-15.	Waveform is correct.	2
		If waveform is absent, check previous divider.	
2	Observe waveform at test point A and compare with that shown in figure 4-15.	Waveform is correct.	4
		Waveform is absent.	3
3	Monitor voltage at test point A. Determine cutoff transistor in FF15 and short its collector to ground.	If voltage changes by more than 10 volts and remains at that level, check CR1, CR2, CR3, and CR4.	
		If voltage does not change, check Q1 and Q2.	
		If voltage changes by more than 10 volts but returns to its original level, check Q1 and Q2.	
4.	Observe waveform at test point B and compare with that shown in figure 4-15.	Waveform is correct.	6
		Waveform is absent.	5
5	Monitor voltage at test point B. Determine cutoff transistor in FF16 and short its collector to ground.	If voltage changes by more than 10 volts and remains at that level, check CR5, CR6, CR7, and CR10.	
		If voltage does not change, check Q3 and Q4.	
		If voltage changes by more than 10 volts but returns to its original level, check Q3 and Q4.	
6	Observe waveform at test point C and compare with that shown in figure 4-15.	Waveform is correct.	8
		Waveform is absent.	7
7	Monitor voltage at test point C. Determine cutoff transistor in FF17 and short its collector to ground.	If voltage changes by more than 10 volts and remains at that level, check CR8 and CR9.	
		If voltage does not change, check Q5 and Q6.	
		If voltage changes by more than 10 volts but returns to its original level, check Q5 and Q6.	

TABLE 4-10. (Continued)

STEP	ACTION	RESULTS	NEXT STEP
FREQUENCY DIVIDERS A1A2, A1A3, A1A4 (cont)			
8	Ovserve waveform at test point D and compare with that shown in figure 4-15.	Waveform is correct.	10
		Waveform is absent.	9
9	Monitor voltage at test point D. Determine cutoff transistor in FF18 and short its collector to ground.	If voltage changes by more than 10 volts and remains at that level, check CR10, CR11, and CR12.	
		If voltage does not change, check Q7 and Q8.	
		If voltage changes by more than 10 volts but returns to its original value, check Q7 and Q8.	
10	Observe waveform at test point E and compare with that shown in figure 4-15.	Waveform is correct.	11
		If waveform is incorrect, check Q9.	
11	Observe waveform at test point F and compare with that shown in figure 4-15.	Waveform is correct.	13
		Waveform is absent.	12
12	Monitor voltage at test point F. Determine cutoff transistor in FF23 and short its collector to ground.	If voltage changes by more than 10 volts and remains at that level, check CR13, CR14, CR15, and CR16.	
		If voltage does not change, check Q13 and Q14.	
		If voltage changes by more than 10 volts but returns to its original level, check Q13 and Q14.	
13	Observe waveform at test point G and compare with that shown in figure 4-15.	Waveform is correct.	15
		Waveform is absent.	14
14	Monitor voltage at test point G. Determine cutoff transistor in FF24 and short its collector to ground.	If voltage changes by more than 10 volts and remains at that level, check CR17, CR18, CR19, and CR20.	
		If voltage does not change, check Q15 and Q16.	
		If voltage changes by more than 10 volts but returns to its original level, check Q15 and Q16.	
15	Observe waveform at test point H and compare with that shown in figure 4-15.	Waveform is correct.	17
		Waveform is absent.	16
16	Monitor voltage at test point H. Determine cutoff transistor in FF25 and short its collector to ground.	If voltage changes by more than 10 volts and remains at that level, check CR21 and CR22.	

TABLE 4-10. (Continued)

STEP	ACTION	RESULTS	NEXT STEP
	FREQUENCY DIVIDERS A1A2, A1A3, A1A4 (cont)		
16 (cont)		If voltage does not change, check Q17 and Q18.	
		If voltage changes by more than 10 volts but returns to its original level, check Q17 and Q18.	
17	Observe waveform at test point I and compare with that shown in figure 4-15.	Waveform is correct.	19
		Waveform is absent.	18
18	Monitor voltage at test point I. Determine cutoff transistor in FF26 and short its collector to ground.	If voltage changes by more than 10 volts and remains at that level, check CR20, CR23, and CR24.	
		If voltage does not change, check Q19 and Q20.	
		If voltage changes by more than 10 volts but returns to its original level, check Q15 and Q16.	
19	Observe waveform at test point 3 and compare with that shown in figure 4-15.	Waveform is correct.	20
		If waveform is incorrect, check Q21.	
20	Rotate time-base switch until voltage at test point 4 becomes more positive than +17 volts. Observe waveform at test point 2 and compare with that shown in figure 4-15.	Waveform is correct.	21
		If waveform is incorrect, check Q11.	
21	Rotate time-base switch until voltage at test point 7 becomes greater than +17 volts. Observe waveform at test point 2 and compare with that shown in figure 4-15.	Waveform is correct.	22
		If waveform is incorrect, check Q12.	
22	Set the controls on the front panel of the counter as follows: Mode selector switch to SEP. B MULTIPLIER switch to 1. B TRIGGER VOLTS control to 0. Apply a 1-volt rms 1000-cps, sine wave to the B AC connector. Rotate FUNCTION switch until voltage at test point 6 becomes more positive than +17 volts. Observe waveform at test point 3 and compare with that shown in figure 4-15.	Waveform is correct.	23
		If waveform is incorrect, check Q22.	
23	Rotate FUNCTION switch until voltage at test point 5 becomes more positive than +17 volts. Observe waveform at test point E and compare with that shown in figure 4-15.	If waveform is correct, check loading of time-base output.	
		If waveform is incorrect, check Q10.	

TABLE 4-10. (Continued)

STEP	ACTION	RESULTS	NEXT STEP
	FREQUENCY DIVIDER A1A5		
24	Set FUNCTION switch to MAN START. Observe waveform at test point J and compare with that shown in figure 4-15.	Waveform is correct.	26
		Waveform is absent.	25
25	Monitor voltage at test point J. Determine cutoff transistor in FF1 and short its collector to ground.	If voltage changes by more than 10 volts and remains at that level, check A1A5CR1, A1A5CR2, A1A5CR3, and A1A5CR4.	
		If voltage does not change, check A1A5Q1 and A1A5Q2.	
		If voltage changes by more than 10 volts but returns to its original level, check A1A5Q1 and A1A5Q2.	
26	Observe waveform at test point K and compare with that shown in figure 4-15.	Waveform is correct.	28
		Voltage does not change.	27
27	Monitor voltage at test point K. Determine cutoff transistor in FF2 and short its collector to ground.	If voltage changes by more than 10 volts and remains at that level, check A1A5CR5, A1A5CR6, A1A5CR7, A1A5CR8, A1A5CR9, and A1A5CR10.	
		If voltage does not change, check A1A5Q3 and A1A5Q4.	
		If voltage changes by more than 10 volts but returns to its original level, check A1A5Q3 and A1A5Q4.	
28	Observe waveform at test point L and compare with that shown in figure 4-15.	Waveform is correct.	30
		Voltage does not change.	29
29	Monitor voltage at test point L. Determine cutoff transistor in FF3 and short its collector to ground.	If voltage changes by more than 10 volts and remains at that level, check A1A5CR11, A1A5CR12, A1A5CR13, and A1A5CR14.	
		If voltage does not change, check A1A5Q5 and A1A5Q6.	
		If voltage changes by more than 10 volts but returns to its original level, check A1A5Q5 and A1A5Q6.	
30	Observe waveform at test point 8 and compare with that shown in figure 4-15.	Waveform is correct.	32
		Waveform is absent.	31

TABLE 4-10. (Continued)

STEP	ACTION	RESULTS	NEXT STEP
	FREQUENCY DIVIDER A1A5 (cont)		
31	Monitor voltage at test point 8. Determine cutoff transistor in FF4 and short its collector to ground.	If voltage changes by more than 10 volts and remains at that level, check A1A5CR9, A1A5CR15, A1A5CR16, A1A5CR17, and A1A5CR18.	
		If voltage does not change, check A1A5Q7 and A1A5Q8.	
		If voltage changes by more than 10 volts but returns to its original level, check A1A5Q7 and A1A5Q8.	
32	Set time-base switch to 10^6. Observe waveform at test point 9 and compare with that shown in figure 4-15.	Waveform is correct.	33
		If voltage does not change, check A1A5Q15, A1A5Q16, A1A5CR22, and A1A5CR23.	
33	Set time-base switch to 10^5. Observe waveform at test point 9 and compare with that shown in figure 4-15.	Waveform is correct.	34
		If waveform is absent, check A1A5Q15, A1A5Q17, and A1A5CR22.	
34	Set time-base switch to 10^6. Observe waveform at test point 9 and compare with that shown in figure 4-15.	Waveform is correct.	35
		If waveform is absent, check A1A5Q14, A1A5Q15, A1A5CR20, A1A5CR21, and A1A5CR22.	
35	Set time-base switch to 10^5. Observe waveform at test point M and compare with that shown in figure 4-15.	Waveform is correct.	36
		If waveform is incorrect, check A1A5Q9, A1A5Q10, and A1A5CR19.	
36	Observe waveform at test point 11 and compare with that shown in figure 4-15.	Waveform is correct.	37
		If waveform is incorrect, check A1A5Q11, A1A5Q12, and A1A5Q13.	
37	Set FUNCTION switch to SCALE A, time-base switch to 10^2, and SENSITIVITY switch to TEST. Observe waveform at test point M and compare with that shown in figure 4-15.	If waveform is correct, check loading on STD FREQ OR SCALE OUT receptacle.	
		If waveform is incorrect, check A1A5Q9.	

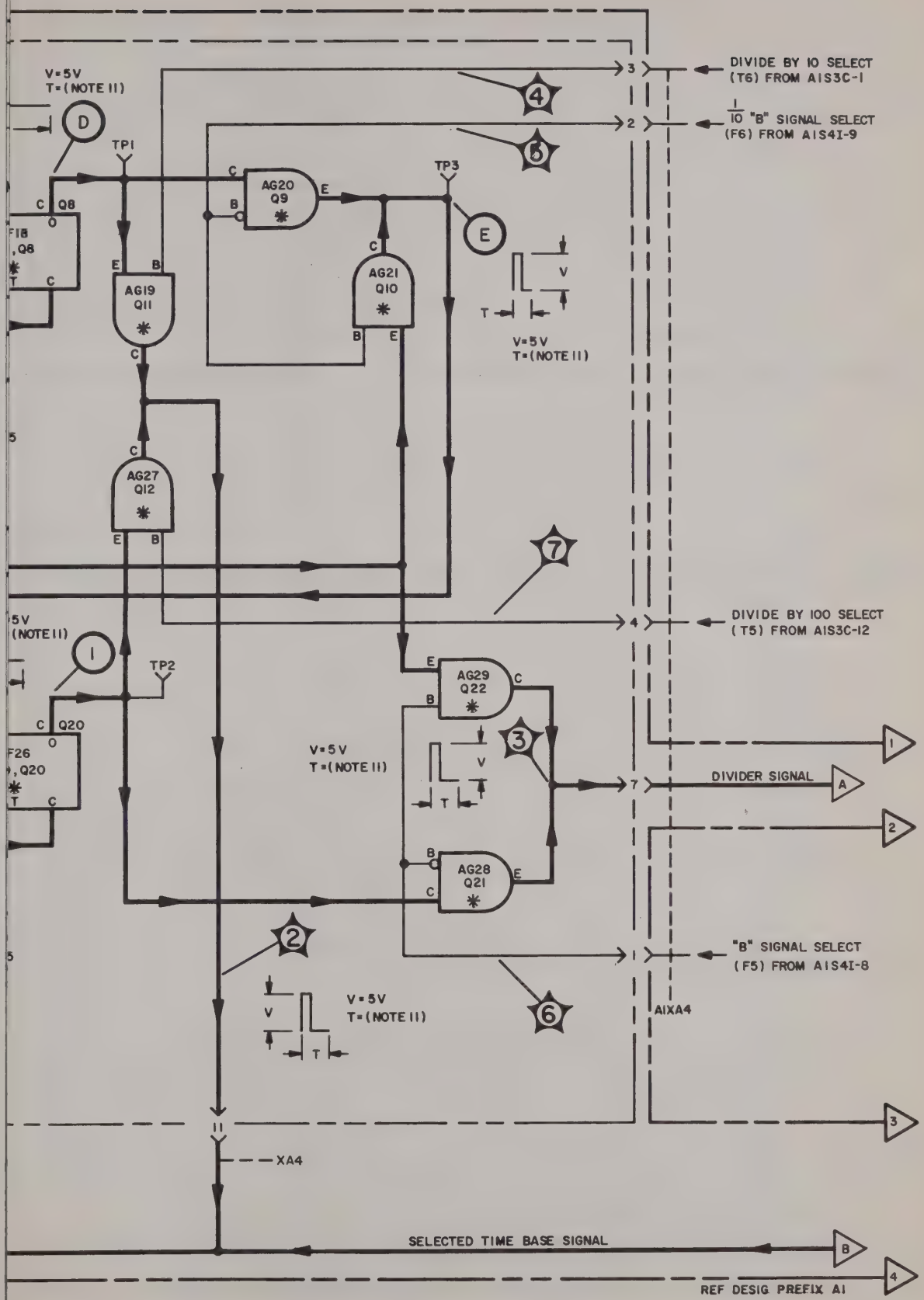

Figure 4-15. Scaler, Functional and Servicing Block Diagram (Sheet 1 of 2)

TABLE 4-10. (Continued)

STEP	ACTION	RESULTS	NEXT STEP
		FREQUENCY DIVIDER A1A5 (cont)	
31	Monitor voltage at test point 8. Determine cutoff transistor in FF4 and short its collector to ground.	If voltage changes by more than 10 volts and remains at that level, check A1A5CR9, A1A5CR15, A1A5CR16, A1A5CR17, and A1A5CR18.	
		If voltage does not change, check A1A5Q7 and A1A5Q8.	
		If voltage changes by more than 10 volts but returns to its original level, check A1A5Q7 and A1A5Q8.	
32	Set time-base switch to 10^6. Observe waveform at test point 9 and compare with that shown in figure 4-15.	Waveform is correct.	33
		If voltage does not change, check A1A5Q15, A1A5Q16, A1A5CR22, and A1A5CR23.	
33	Set time-base switch to 10^5. Observe waveform at test point 9 and compare with that shown in figure 4-15.	Waveform is correct.	34
		If waveform is absent, check A1A5Q15, A1A5Q17, and A1A5CR22.	
34	Set time-base switch to 10^6. Observe waveform at test point 9 and compare with that shown in figure 4-15.	Waveform is correct.	35
		If waveform is absent, check A1A5Q14, A1A5Q15, A1A5CR20, A1A5CR21, and A1A5CR22.	
35	Set time-base switch to 10^5. Observe waveform at test point M and compare with that shown in figure 4-15.	Waveform is correct.	36
		If waveform is incorrect, check A1A5Q9, A1A5Q10, and A1A5CR19.	
36	Observe waveform at test point 11 and compare with that shown in figure 4-15.	Waveform is correct.	37
		If waveform is incorrect, check A1A5Q11, A1A5Q12, and A1A5Q13.	
37	Set FUNCTION switch to SCALE A, time-base switch to 10^2, and SENSITIVITY switch to TEST. Observe waveform at test point M and compare with that shown in figure 4-15.	If waveform is correct, check loading on STD FREQ OR SCALE OUT receptacle.	
		If waveform is incorrect, check A1A5Q9.	

NOTES

1. Primary signal paths weighted. Feedback paths weighted and dashed.
2. ——— — — — indicates assembly boundaries.
3. Names of panel controls and connectors are enclosed in boxes.
4. Dc voltages are preceded by "+" or "−".
5. Waveforms recorded with an AN/USM-140B Oscilloscope.
   Control settings:
   Sensitivity: 5 v/cm.
   Sweep time: See Note 11.
6. Explanation of symbols placed at waveforms.
   T – Duration of the portion of waveform indicated.
   V – Peak-to-peak voltage.
7. Dc voltages are measured with a CCUH-801 Dc Differential Voltmeter.
8. Abbreviations within logic or circuit blocks are as follows:
   AG AND Gate
   FF Flip-Flop
   INV Inverter
   OR OR Gate
   ST Schmitt Trigger
   Identification within logic blocks is as follows: The first line identifies the logic function symbol on the drawing. The symbols are numbered in general data flow sequence. The second line identifies the major parts associated with the logic function. The third line identifies the assembly containing the logic function.
9. Letters and numbers outside of some logic or circuit blocks indicate transistor elements.
10. Assemblies A1A2, A1A3, and A1A4 are identical. Only A1A4 is shown in detail.
11. Time duration of waveforms is variable.
12. Assembly numbers are as given at bottom of assembly boundaries.
13. Operating control settings:
    POWER switch to TRACK.
    FUNCTION switch to MAN START.
14. F and T select terms are defined in table 4-1.
15. An asterisk (*) indicates that the assembly designator is the same as that listed in the lower left-hand corner of the applicable dashed-line block.
16. On counters with serial No. A4 through A13, A15, A17, A18, A20, A21, A22, A24 through A28, A30, A31, A33, and A36:
    a. Signal source at A1XA5-13 is A1S2-7.
    b. CR24 is not included.
    c. R55 replaces CR24 in AG11 block.

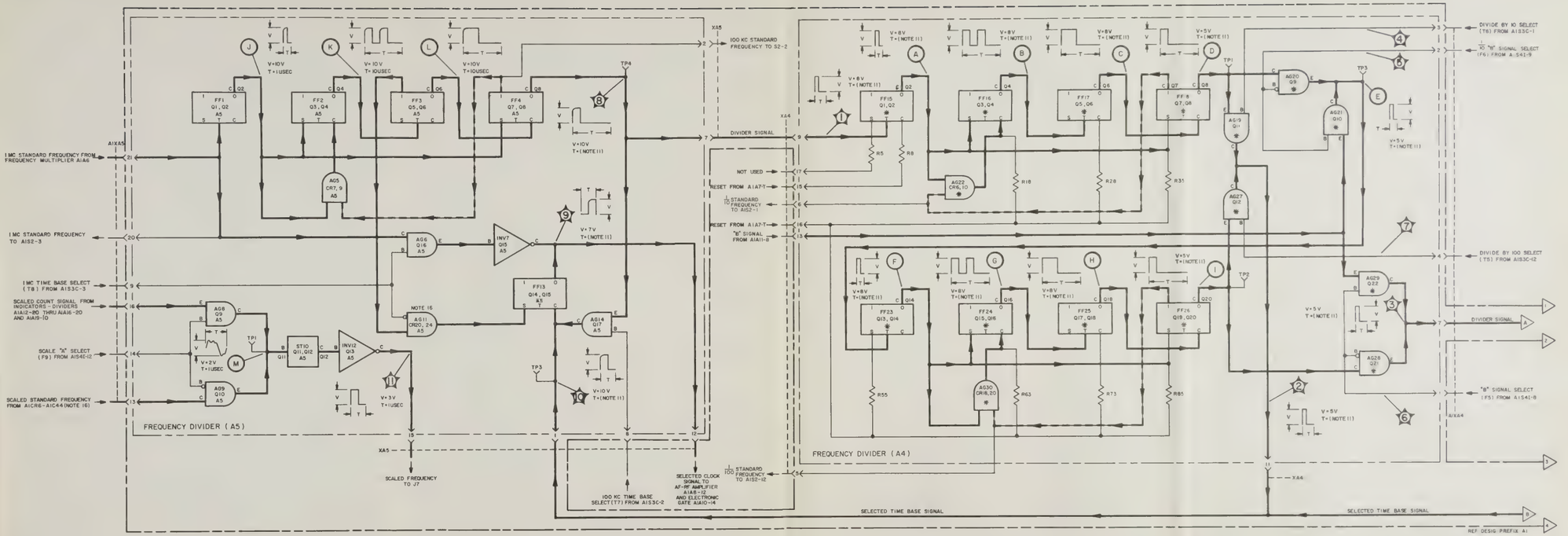

Figure 4-15. Scaler, Functional and Servicing Block Diagram (Sheet 1 of 2)

NOTES

1. Primary signal paths weighted. Feedback paths weighted and dashed.
2. ——— — — ——— indicates assembly boundaries.
3. Names of panel controls and connectors are enclosed in boxes.
4. Dc voltages are preceded by "+" or "–".
5. Waveforms recorded with an AN/USM-140B Oscilloscope.

   Control settings:

   Sensitivity: 5 v/cm.
   Sweep time: See Note 11.

6. Explanation of symbols placed at waveforms.

   T – Duration of the portion of waveform indicated.
   V – Peak-to-peak voltage.

7. Dc voltages are measured with a CCUH-801 Dc Differential Voltmeter.
8. Abbreviations within logic or circuit blocks are as follows:

AG	AND Gate
FF	Flip-Flop
INV	Inverter
OR	OR Gate
ST	Schmitt Trigger

   Identification within logic blocks is as follows: The first line identifies the logic function symbol on the drawing. The symbols are numbered in general data flow sequence. The second line identifies the major parts associated with the logic function. The third line identifies the assembly containing the logic function.

9. Letters and numbers outside of some logic or circuit blocks indicate transistor elements.
10. Assemblies A1A2, A1A3, and A1A4 are identical. Only A1A4 is shown in detail.
11. Time duration of waveforms is variable.
12. Assembly numbers are as given at bottom of assembly boundaries.
13. Operating control settings:

    POWER switch to TRACK.
    FUNCTION switch to MAN START.

14. F and T select terms are defined in table 4-1.
15. An asterisk (*) indicates that the assembly designator is the same as that listed in the lower left-hand corner of the applicable dashed-line block.
16. On counters with serial No. A4 through A13, A15, A17, A18, A20, A21, A22, A24 through A28, A30, A31, A33, and A36:

    a. Signal source at A1XA5-13 is A1S2-7.
    b. CR24 is not included.
    c. R55 replaces CR24 in AG11 block.

Figure 4-15. Scaler, Functional and Servicing Block Diagram (Sheet 1 of 2)

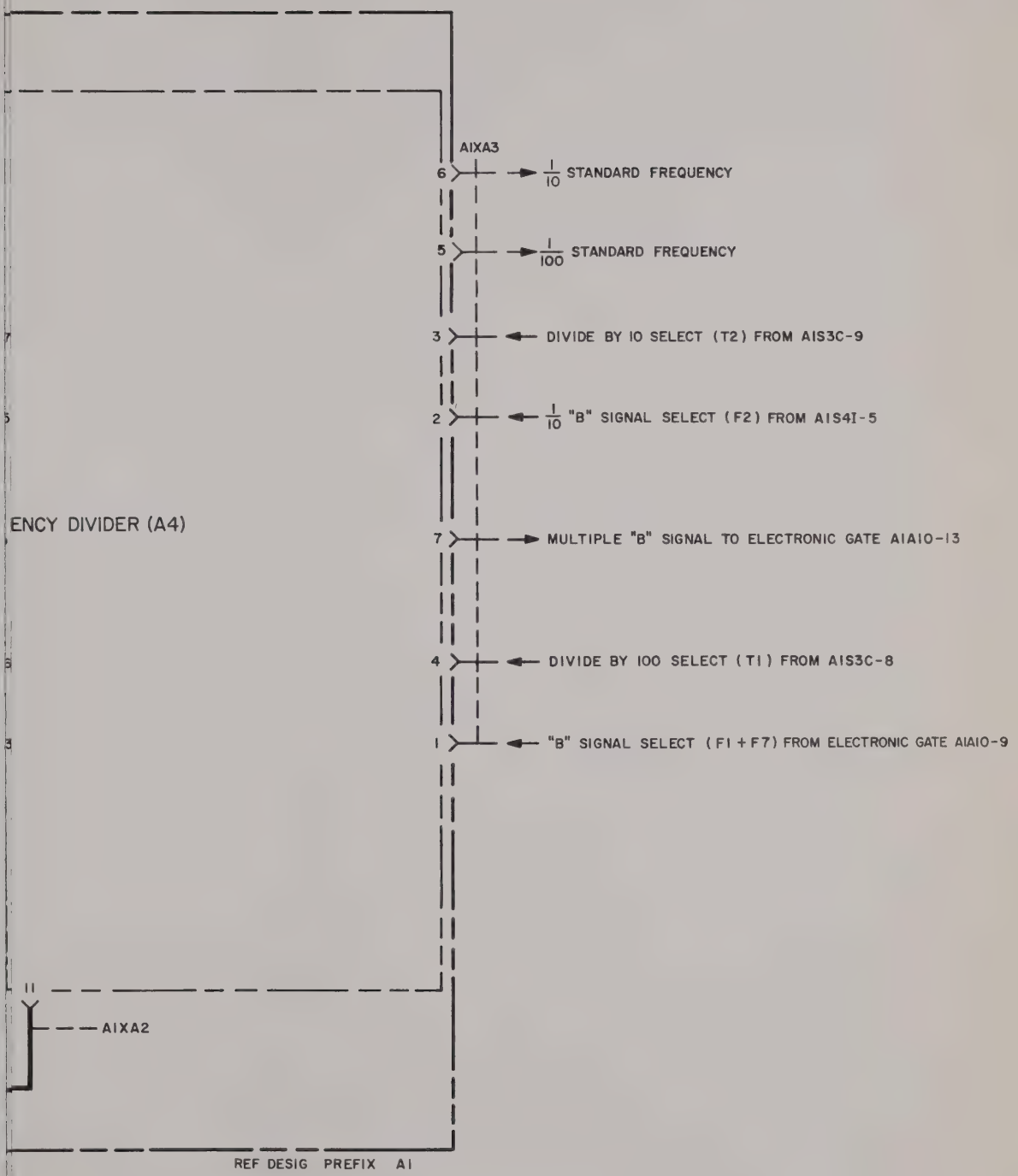

Figure 4-15. Scaler, Functional and Servicing Block Diagram (Sheet 2 of 2)

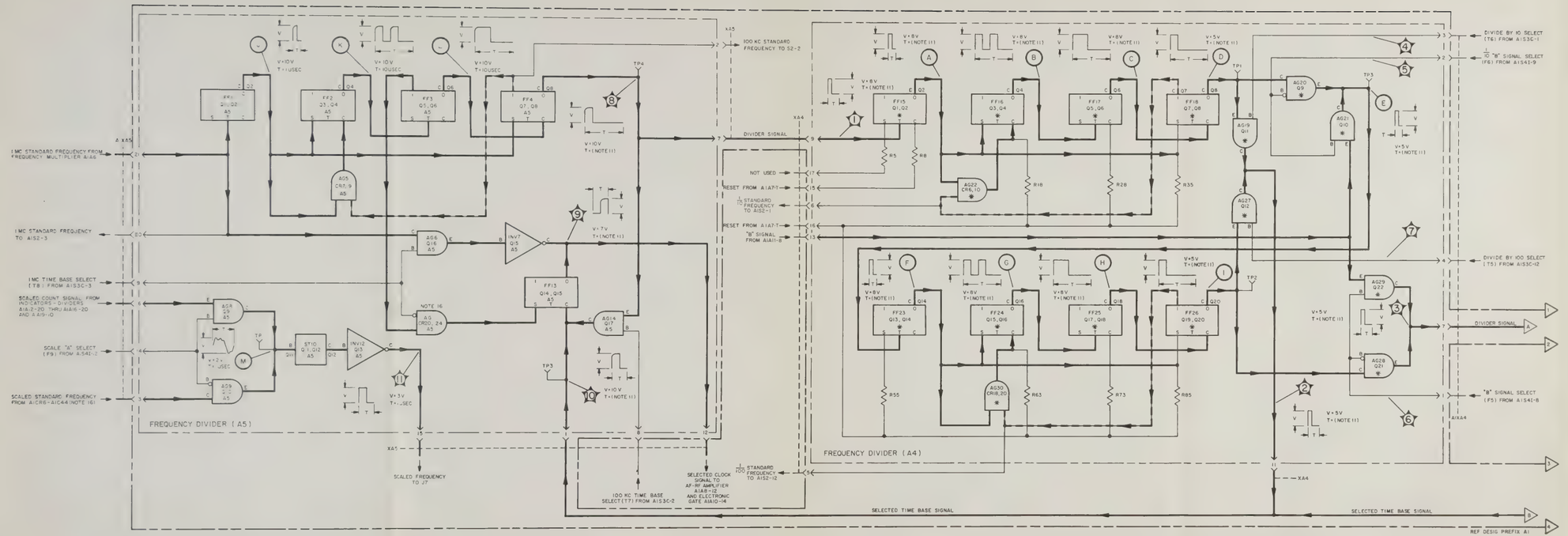

NOTES

1. Primary signal paths weighted. Feedback paths weighted and dashed
2. ——— — — — indicates assembly boundaries.
3. Names of panel controls and connectors are enclosed in boxes
4. Dc voltages are preceded by "+" or "−"
5. Waveforms recorded with an AN/USM 140B Oscilloscope.
   Control settings:
   Sensitivity: 5 v/cm.
   Sweep time: See Note 11
6. Explanation of symbols placed at waveforms.
   T – Duration of the portion of waveform indicated.
   V – Peak-to-peak voltage
7. Dc voltages are measured with a CCUH-801 Dc Differential Voltmeter
8. Abbreviations within logic or circuit blocks are as follows

AG	AND Gate
FF	Flip-Flop
INV	Inverter
OR	OR Gate
ST	Schmitt Trigger

   Identification within logic blocks is as follows: The first line identifies the logic function symbol on the drawing. The symbols are numbered in general data flow sequence. The second line identifies the major parts associated with the logic function. The third line identifies the assembly containing the logic function.
9. Letters and numbers outside of some logic or circuit blocks indicate transistor elements.
10. Assemblies A1A2, A1A3, and A1A4 are identical. Only A1A4 is shown in detail.
11. Time duration of waveforms is variable.
12. Assembly numbers are as given at bottom of assembly boundaries.
13. Operating control settings:
    POWER switch to TRACK.
    FUNCTION switch to MAN START.
14. F and T select terms are defined in table 4-1.
15. An asterisk (*) indicates that the assembly designator is the same as that listed in the lower left-hand corner of the applicable dashed-line block.
16. On counters with serial No. A4 through A13, A15, A17, A18, A20, A21, A22, A24 through A28, A30, A31, A33, and A36:
    a. Signal source at A1XA5-13 is A1S2-7.
    b. CR24 is not included.
    c. R55 replaces CR24 in AG11 block.

Figure 4-15. Scaler, Functional and Servicing Block Diagram (Sheet 1 of 2)

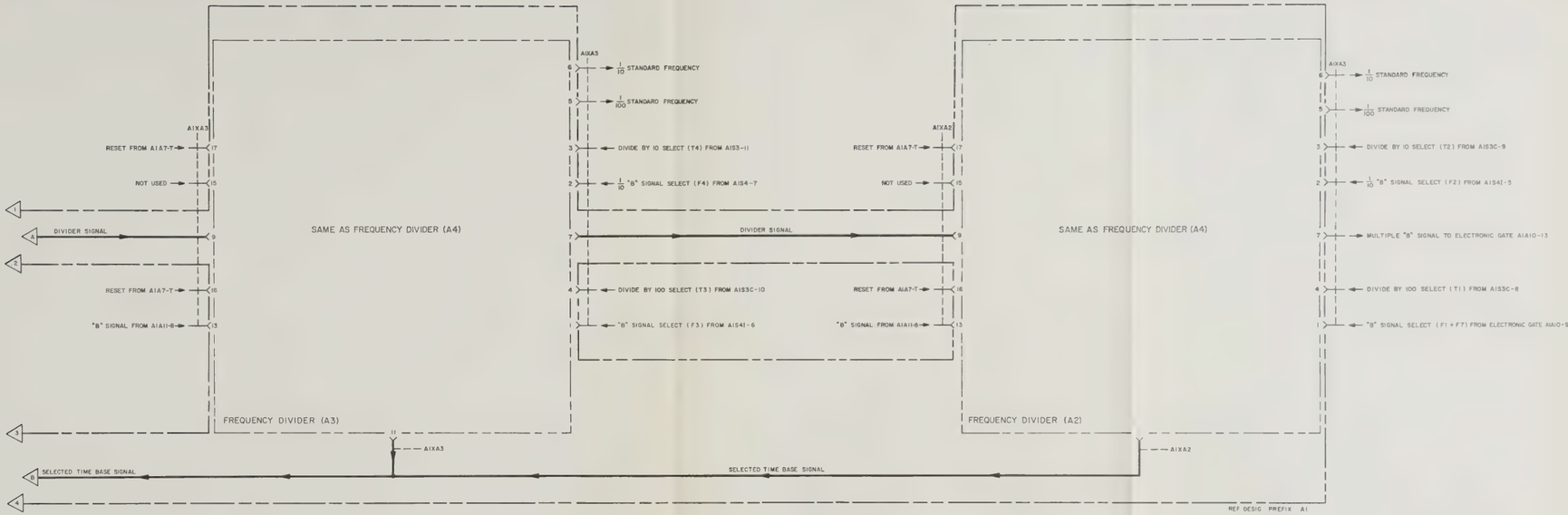

Figure 4-15. Scaler, Functional and Servicing Block Diagram (Sheet 2 of 2)

4-11. GATE CONTROL.

a. GATE CONTROL FUNCTIONAL DESCRIPTION. — The gate control functional section provides the gate control signal to the count decades functional section. This signal determines the length of time count decades count the signal applied to their input. The gate control functional section is constructed on printed circuit board A1A10. Figure 4-16 is the functional and servicing block diagram for the section.

The gate-control signal is produced by the gate flip-flop FF9, consisting of A1A10Q12 and A1A10Q14, and emitter follower EF12, consisting of A1A10Q19. Setting of FF9 causes the gate control signal to become zero volts and the count decades to count. The gate flip-flop can be set by the following signals: the selected clock signal corresponding to the gate time selected by the time-base switch, or the multiple B signal corresponding to the appropriate PERIOD B measurement selected by the FUNCTION switch.

The MANUAL START and SCALE A functions require the gate control signal to be zero volts. When either of these functions is selected, FF12 is saturated to produce zero volts at the gate control signal output. Resetting the gate flip-flop causes the gate control signal to become +6 volts and the count decades to stop counting. The gate flip-flop may be reset by any of the signals that set it, or by the C signal. When the counter is operating in any function except TIME B ⟶ C, the set and reset inputs to the gate flip-flop are connected together by AND gate AG16.

The multiple B signal and selected clock signal are coupled to AND gates AG14 and AG13, respectively. The output of both of these AND gates is coupled to Schmitt trigger ST15. The output of the Schmitt trigger is applied through AG16 to the set and reset inputs of the gate flip-flop FF9. The C signal is coupled through AND gate AG17 to the reset side of the gate flip-flop when the counter is operated in the TIME B ⟶ C function.

The output of the FF9 is coupled to emitter follower EF12; the output of this stage becomes the gate control signal. The output of the gate flip-flop is also coupled to inverters INV8 and INV18 consisting of A1A10Q11 and A1A10Q18; the output of INV18 becomes the gate signal used by the cycle control functional section.

Once the gate flip-flop has produced the gate signal, it must be prevented from producing another one until the cycle control has completed its control of the display and produced a reset pulse. This is the function of the latch flip-flop FF6 consisting of A1A10Q13 and A1A10Q15. This flip-flop is set by the gate flip-flop at the time corresponding to the start of the gate time. Once the latch flip-flop is set it prevents the gate flip-flop from producing another gate control signal. The latch flip-flop remains set until the cycle control produces a reset pulse at the end of the display time. The reset pulse from the cycle control is delayed by the reset delay generator DG4, consisting of A1A10Q7 and A1A10Q10, and resets the latch flip-flop. Once the latch flip-flop is reset, the gate flip-flop produces another gate control signal and the cycle is repeated.

b. GATE CONTROL TROUBLE SHOOTING. — Problems in the gate control functional section are usually caused by improper or no operation of gate flip-flop FF9 and latch flip-flop FF6. The first step in trouble shooting the gate control is to check that both flip-flops can be made to change state, by shorting the collector of the cutoff transistor to ground. If both flip-flops are operating properly, trace the signals that set and reset the gate flip-flop through the gating circuits AG14, AG17, AG13, and AG19, the Schmitt trigger ST15, and trace the outputs of the gate flip-flop through the inverter and emitter follower stages INV3, INV18 and EF12. The latch circuits can be checked by tracing the reset pulse through the reset delay generator DG4, to the latch flip-flop FF6 and to the reset input of the gate flip-flop FF9. The gate control trouble-shooting chart, table 4-11, is based on the above procedure.

c. USEFUL ILLUSTRATIONS. — Illustrations useful in maintaining this functional section are: figures 4-16, 5-45, and 5-68.

TABLE 4-11. GATE CONTROL TROUBLE SHOOTING

STEP	ACTION	RESULTS	NEXT STEP
1	Set the controls on the front panel on the counter as follows: POWER switch to TRACK. FUNCTION switch to MAN START. Monitor voltage at test point 1. Determine cutoff transistor in FF9 and short its collector to ground.	Voltage changes by more than 5 volts and remains at that level.	2
		If voltage does not change, check A1A10Q12, A1A10Q14, A1A10Q16, A1A10Q19, A1A10CR10, A1A10CR11, A1A10CR19, and A1A10CR21.	
		If voltage changes by more than 5 volts but returns to its original level, check A1A10Q12, A1A10Q14, A1A10CR10, A1A10CR11, A1A10CR19, and A1A10CR21.	
2	Monitor voltage at test point 2. Determine cutoff transistor in FF9 and short its collector to ground.	Voltage changes by more than 10 volts and remains at that level.	3
		If voltage does not change, check A1A10Q11 and A1A10Q18.	
3	Monitor voltage at test point B. Determine cutoff transistor in FF6 and short its collector to ground.	Voltage changes by more than 10 volts and remains at that level.	4
		If voltage does not change, check A1A10Q13, A1A10Q15, A1A10Q17, A1A10CR13, A1A10CR17, A1A10CR22, and A1A10CR23.	
		If voltage changes by more than 10 volts but returns to its original level, check A1A10Q13, A1A10Q15, A1A10CR13, and A1A10CR17.	
4	Monitor voltage at test point 1.	Voltage is more negative than +1 volt.	5
		If voltage is more positive than +1 volt, check A1A10Q16 and A1A10CR3.	
5	Set the FUNCTION switch to SCALE A. Monitor voltage at test point 1.	Voltage is more negative than +1 volt.	6
		If voltage is more positive than +1 volt, check A1A10CR4.	
6	Set the FUNCTION switch to FREQ and set time-base switch to 10^3. Observe waveform at test point A and compare with that shown in figure 4-16.	Waveform is correct.	7
		If waveform is incorrect, check A1A10Q7, A1A10Q10, A1A10CR8, and A1A10CR9.	
7	Observe waveform at C and compare with that shown in figure 4-16.	Waveform is correct.	8
		If waveform is incorrect, check A1A10Q4, A1A10Q5, A1A10Q6, A1A10Q7, and A1A10CR6.	
8	Observe waveform at test point D and compare with that shown in figure 4-16.	Waveform is correct.	9
		If waveform is incorrect, check A1A10Q9.	

TABLE 4-11. (Continued)

STEP	ACTION	RESULTS	NEXT STEP
9	Set controls on the front panel of the counter as follows: FUNCTION switch to PERIOD B x 1. Mode selector switch to COM. B MULTIPLIER switch to 1. B TRIGGER VOLTS control to 0. Apply a 1-volt rms, 1000-cps sine wave to the B AC connector. Observe the waveform at test point C and compare with that shown in figure 4-16.	Waveform is correct.	10
		If waveform is incorrect, check A1A10Q1.	
10	Set the FUNCTION switch to TIME B ⟶ C. Observe the waveform at test point D and compare with that shown in figure 4-16.	Waveform is correct.	11
		If waveform is incorrect, check A1A10Q2.	
11	Monitor voltage at test point 3.	Voltage more positive than +17 volts.	12
		If voltage is more positive than +17 volts, check A1A10CR1.	
12	Set FUNCTION switch to PERIOD B x 1. Monitor voltage at test point 3.	If voltage is more positive than +17 volts, check loading of gate control and gate signals.	
		If voltage is more negative than +17 volts, check A1A10CR2.	

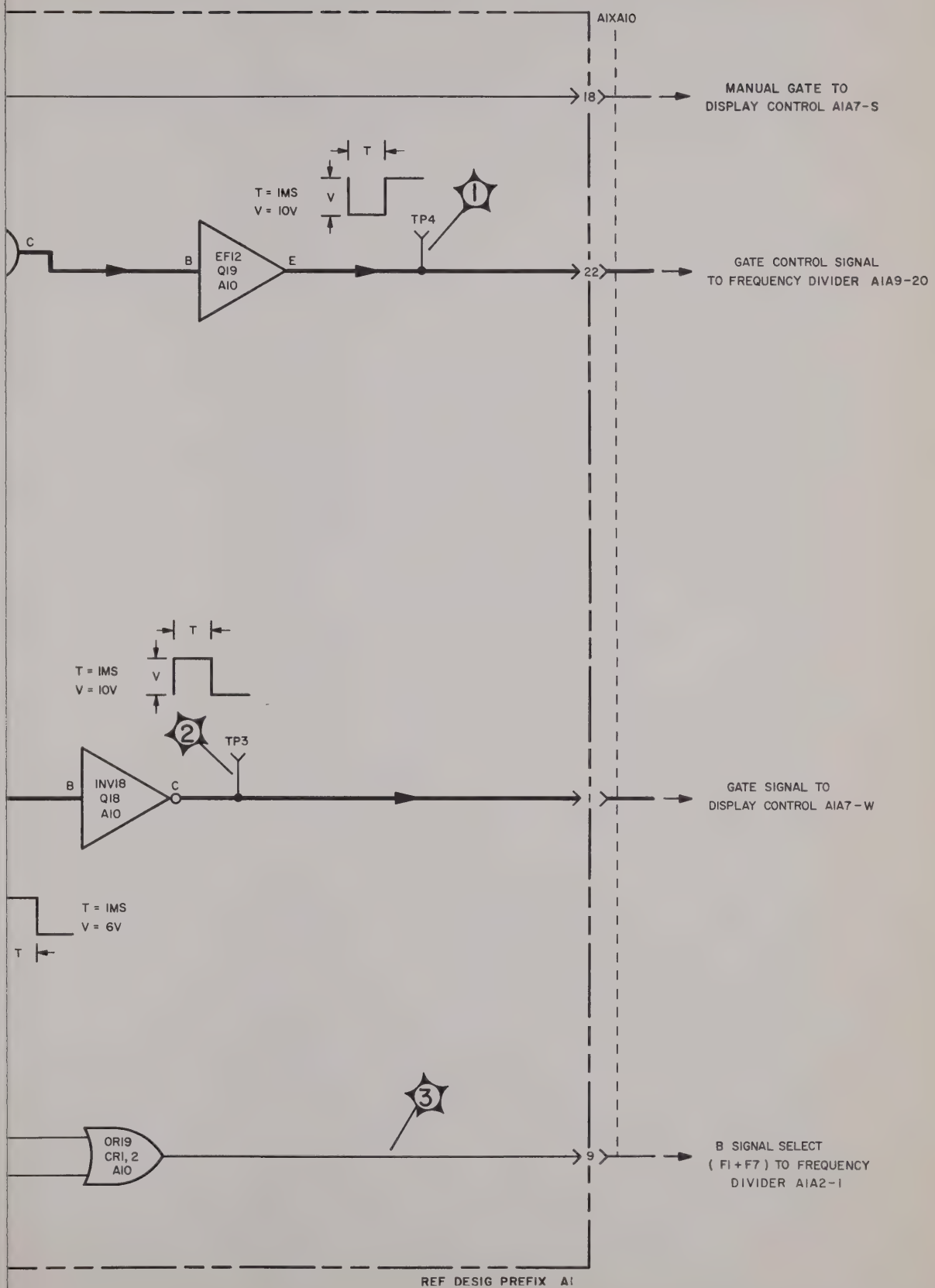

Figure 4-16. Gate Control, Functional and Servicing Block Diagram

NOTES

1. Primary signal paths weighted. Feedback paths weighted and dashed.
2. ——— — — ——— indicates assembly boundaries.
3. Dc voltages are preceded by "+" or "−".
4. Waveforms recorded with an AN/USM-140B Oscilloscope.

   Control settings:

   Sensitivity: 5 v/cm.
   Sweep time: 20 μs/cm, 1 ms/cm.

5. Explanation of symbols placed at waveforms.

   T – Duration of the portion of waveform indicated.
   V – Peak-to-peak voltage.

6. Dc voltages are measured with a CCUH-801 Dc Differential Voltmeter.
7. Abbreviations within logic or circuit blocks are as follows:

AG	AND Gate
DG	Delay Generator
EF	Emitter Follower
FF	Flip-Flop
INV	Inverter
OR	OR Gate
ST	Schmitt Trigger

   Identification within logic blocks is as follows: The first line identifies the logic function symbol on the drawing. The symbols are numbered in general data flow sequence. The second line identifies the major parts associated with the logic function. The third line identifies the assembly containing the logic function.

8. Letters and numbers outside of some logic or circuit blocks indicate transistor elements.
9. Time duration of this waveform is dependent upon setting of DISPLAY control.
10. Operating control settings:

    POWER switch to TRACK.
    FUNCTION switch to MAN START.

11. F and T select terms are defined in table 4-1.

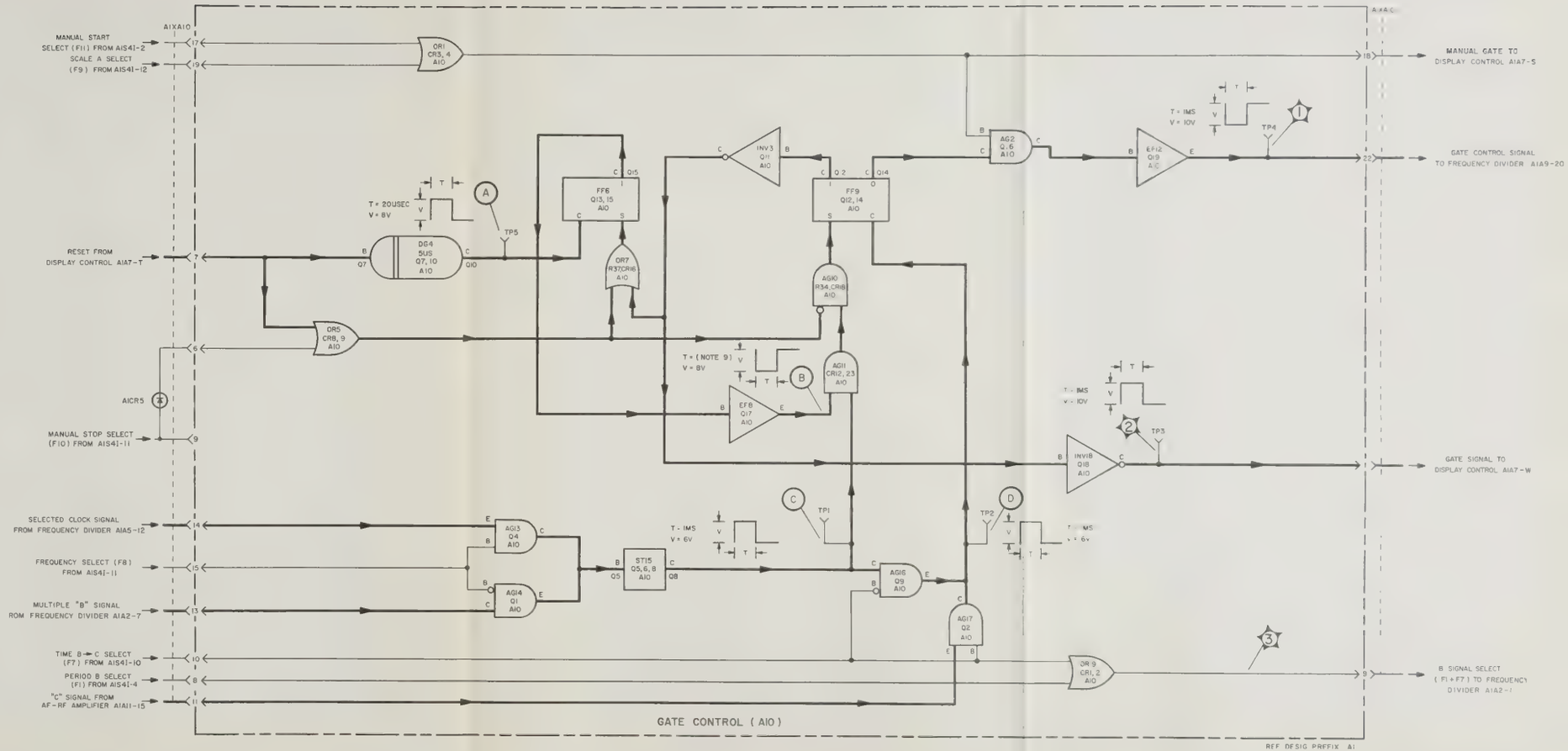

Figure 4-16. Gate Control, Functional and Servicing Block Diagram

4-12. COUNT CONTROL.

a. COUNT CONTROL FUNCTIONAL DESCRIPTION. — The count control consists of circuits which select the proper count signal to be supplied to the count decades. This functional section is constructed on one printed circuit board (A1A8). Figure 4-17 is the functional and servicing block diagram of the count control.

The A signal, selected clock signal, C signal and 10-mc test signal can be counted by the count decades. These four signals are supplied to the count control where one is selected and appears at the count signal output.

The A signal appears at the coaxial connector mounted directly on the printed circuit board A1A8. This signal is passed through a three-stage amplifier AMPL10, AMPL11, and EF12 (A1A8Q8, A1A8Q9, and A1A8Q10), and applied to Schmitt trigger ST13 consisting of A1A8Q11 and A1A8Q12. The output of the Schmitt trigger is applied to discriminator DISCR14 (A1A8Q13). This transistor is biased so that it does not amplify any noise present at the output of the Schmitt trigger. The output of the discriminator is applied to AND gate AG7.

The selected clock signal, C signal and 10-mc test signal are applied to AND gates AG3, AG6, and AG5, respectively. AND gate AG3 is selected when the counter is operated in any PERIOD mode (except when 10-mc is selected as the clock signal) or in the TIME B⟶C mode. AND gate AG5 is selected when the counter is operated in the TEST mode, or when 10-mc is selected as the clock signal in PERIOD mode. The outputs of these three AND gates are connected together and applied to inverters INV7 and INV7A consisting of A1A8Q5 and A1A8Q14. The output of the inverter is applied to another AND gate, AG8.

AND gate AG8 and AND gate AG15 are controlled by the front panel SENSITIVITY switch. When this switch is in either the .1 V, 1 V, 10 V, 100 V, or PLUG-IN position AG15 is selected, and the A signal is applied to the count decades. When the switch is in either the TEST or FREQ. C position AG8 is selected, and the signal from INV7A is applied to the count decades.

b. COUNT CONTROL TROUBLE SHOOTING. — Problems in the count control functional section usually result in the absence of one or more of the four possible signals at the count signal output. If the A signal does not appear at the output of the amplifier stages when it normally should, check the Schmitt trigger, discriminator, and AG15. If any of the other signals do not appear at the count signal output check the appropriate AND gate AG3, AG5, or AG6, INV7, INV7A, and AG8. The trouble-shooting table, table 4-12, is organized in this manner. Before starting the trouble-shooting procedure, be sure the problem is not due to improper adjustment of the amplifier stages. The adjustment procedure is given in paragraph 5-4f.

c. USEFUL ILLUSTRATIONS. — Illustrations useful in maintaining this functional section are: figures 4-17, 5-43, and 5-69.

TABLE 4-12. COUNT CONTROL TROUBLE SHOOTING

STEP	ACTION	RESULTS	NEXT STEP
1	Set the controls on the front panel of the counter as follows: POWER switch to TRACK. FUNCTION switch to FREQ. SENSITIVITY switch to 1 V. Time-base switch to 1. Apply a 1-volt rms, 1000-cps sine-wave to the FREQ. A connector. Observe the waveform at test point 1 and compare with that shown in figure 4-17.	Waveform is correct.	2
		If waveform is incorrect, check A amplifier, A1A8C9, A1A8C10, and A1A8Q8.	
2	Observe the waveform at test point A and compare with that shown in figure 4-17.	Waveform is correct.	3
		If waveform is incorrect, check A1A8Q8, A1A8Q9, A1A8Q10, A1A8C14, A1A8C15, and adjustment of A1A8R30.	
3	Observe the waveform at test point B and compare with that shown in figure 4-17.	Waveform is correct.	4
		If waveform is incorrect, check A1A8Q10, A1A8Q11, A1A8Q12, and A1A8CR10.	

TABLE 4-12. (Continued)

STEP	ACTION	RESULTS	NEXT STEP
4	Observe the waveform at test point 2 and compare with that shown in figure 4-17.	Waveform is correct.	5
		If waveform is incorrect, check A1A8Q13, A1A8Q7, A1A8CR11, A1A8CR12, and A1A8CR13.	
5	Set FUNCTION switch to SCALE A. Monitor voltage at test point C.	Voltage is more positive than +17 volts.	6
		If voltage is more negative than +17 volts, check A1A8CR5.	
6	Set FUNCTION switch to MANUAL START. Monitor voltage at test point C.	Voltage is more positive than +17 volts.	7
		If voltage is more negative than +17 volts, check A1A8CR6.	
7	Set time-base switch to 10^8. Monitor voltage at test point C.	Voltage is more positive than +17 volts.	8
		If voltage is more negative than +17 volts, check A1A8CR7.	
8	Set time-base switch to 10^7. Observe waveform at test point D and compare with that shown in figure 4-17.	Waveform is correct.	9
		If waveform is incorrect, check A1A8Q2 and A1A8CR3.	
9	Set FUNCTION switch to FREQ. Observe voltage at test point D.	Voltage is a constant level.	10
		If voltage is not a constant level, check A1A8Q4.	
10	Set SENSITIVITY switch to FREQ. C, mode selector switch to SEP, C MULTIPLIER switch to 1, and C TRIGGER VOLTS control to 0. Apply a 1-volt rms, 1000-cps sine wave to the C AC connector. Observe waveform at test point D, and compare with that shown in figure 4-17.	Waveform is correct.	11
		If waveform is incorrect, check A1A8Q1.	
11	Observe waveform at test point 2 and compare with that shown in figure 4-17.	If waveform is correct, check count decades and gate control.	
		If waveform is incorrect, check A1A8Q5, A1A8Q14, A1A8Q6, and A1A8CR8.	

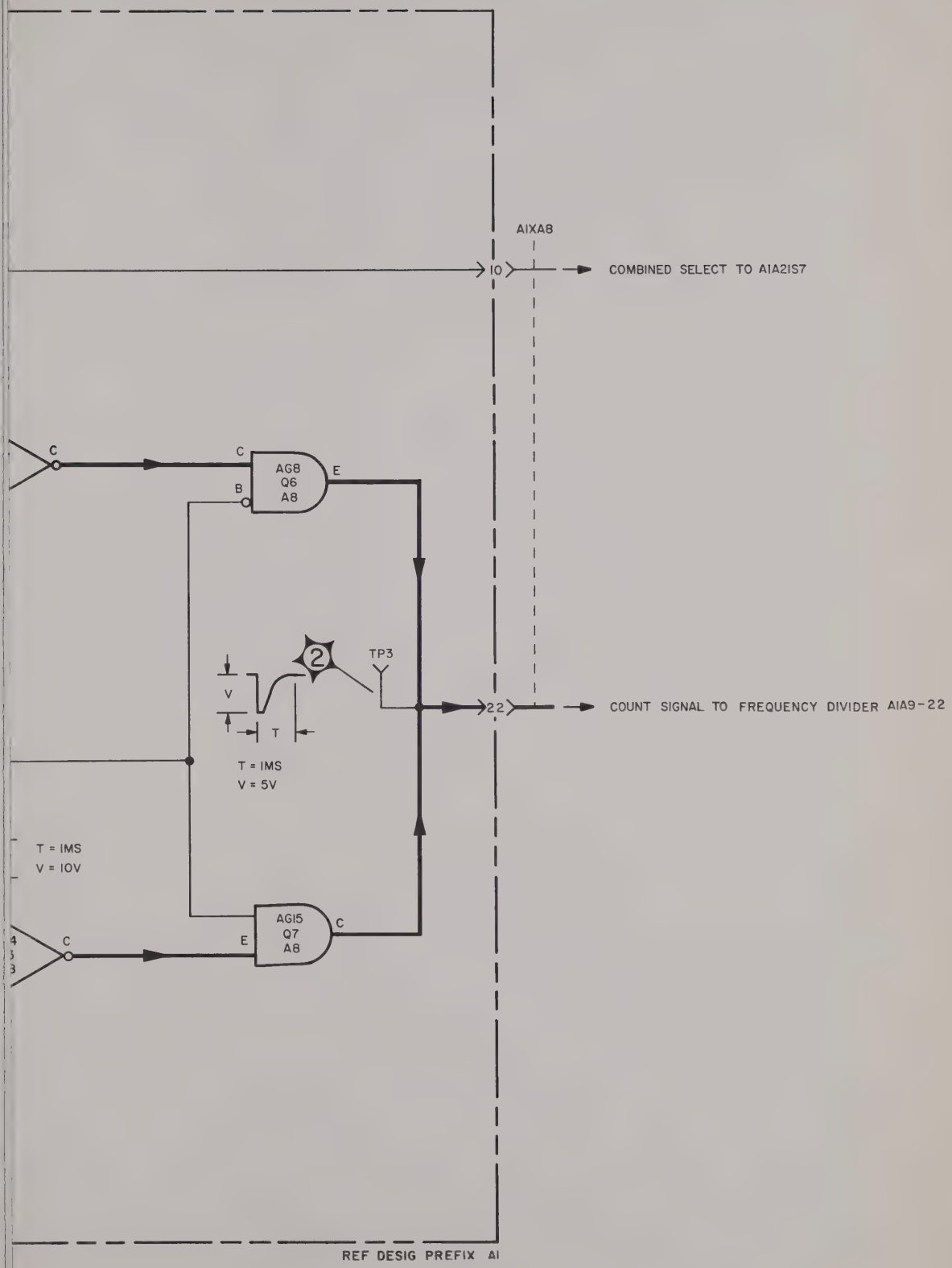

Figure 4-17. Count Control, Functional and Servicing Block Diagram

TABLE 4-12. (Continued)

STEP	ACTION	RESULTS	NEXT STEP
4	Observe the waveform at test point 2 and compare with that shown in figure 4-17.	Waveform is correct.	5
		If waveform is incorrect, check A1A8Q13, A1A8Q7, A1A8CR11, A1A8CR12, and A1A8CR13.	
5	Set FUNCTION switch to SCALE A. Monitor voltage at test point C.	Voltage is more positive than +17 volts.	6
		If voltage is more negative than +17 volts, check A1A8CR5.	
6	Set FUNCTION switch to MANUAL START. Monitor voltage at test point C.	Voltage is more positive than +17 volts.	7
		If voltage is more negative than +17 volts, check A1A8CR6.	
7	Set time-base switch to 10^8. Monitor voltage at test point C.	Voltage is more positive than +17 volts.	8
		If voltage is more negative than +17 volts, check A1A8CR7.	
8	Set time-base switch to 10^7. Observe waveform at test point D and compare with that shown in figure 4-17.	Waveform is correct.	9
		If waveform is incorrect, check A1A8Q2 and A1A8CR3.	
9	Set FUNCTION switch to FREQ. Observe voltage at test point D.	Voltage is a constant level.	10
		If voltage is not a constant level, check A1A8Q4.	
10	Set SENSITIVITY switch to FREQ. C, mode selector switch to SEP, C MULTIPLIER switch to 1, and C TRIGGER VOLTS control to 0. Apply a 1-volt rms, 1000-cps sine wave to the C AC connector. Observe waveform at test point D, and compare with that shown in figure 4-17.	Waveform is correct.	11
		If waveform is incorrect, check A1A8Q1.	
11	Observe waveform at test point 2 and compare with that shown in figure 4-17.	If waveform is correct, check count decades and gate control.	
		If waveform is incorrect, check A1A8Q5, A1A8Q14, A1A8Q6, and A1A8CR8.	

NOTES

1. Primary signal paths weighted.
2. ——— — — ——— indicates assembly boundaries.
3. Dc voltages are preceded by "+" or "−".
4. Waveforms recorded with an AN/USM-140B Oscilloscope.

   Control settings:

   Sensitivity: 5 v/cm, 10 v/cm.
   Sweep time: 1 ms/cm, 0.1 μs/cm.

5. Explanation of symbols placed at waveforms:

   T – Duration of the portion of waveform indicated.
   V – Peak-to-peak voltage.

6. Dc voltages are measured with a CCUH-801 Dc Differential Voltmeter.
7. Abbreviations within logic or circuit blocks are as follows:

AG	AND Gate
AMPL	Amplifier
DISCR	Discriminator
EF	Emitter Follower
INV	Inverter
OR	OR Gate
ST	Schmitt Trigger

   Identification within logic blocks is as follows: The first line identifies the logic function symbol on the drawing. The symbols are numbered in general data flow sequence. The second line identifies the major parts associated with the logic function. The third line identifies the assembly containing the logic function.

8. Letters and numbers outside of some logic or circuit blocks indicate transistor elements.
9. Operating control settings.

   POWER switch to TRACK.
   FUNCTION switch to FREQ to produce waveform at A, B, and 2.
   FUNCTION switch to SCALE A or MANUAL START to produce voltage level at C.
   Time-base switch to 1 to produce waveform at A, B, and 2.
   Time-base switch to 10^7 to produce 10-mc waveform at D.
   Sensitivity switch to 1 V or FREQ. C to produce waveform at A, B, and 2.
   Mode selector switch to SEP.
   C MULTIPLIER switch to 1.
   C TRIGGER VOLTS control to 0.

10. F, T, and S select terms are defined in table 4-1.

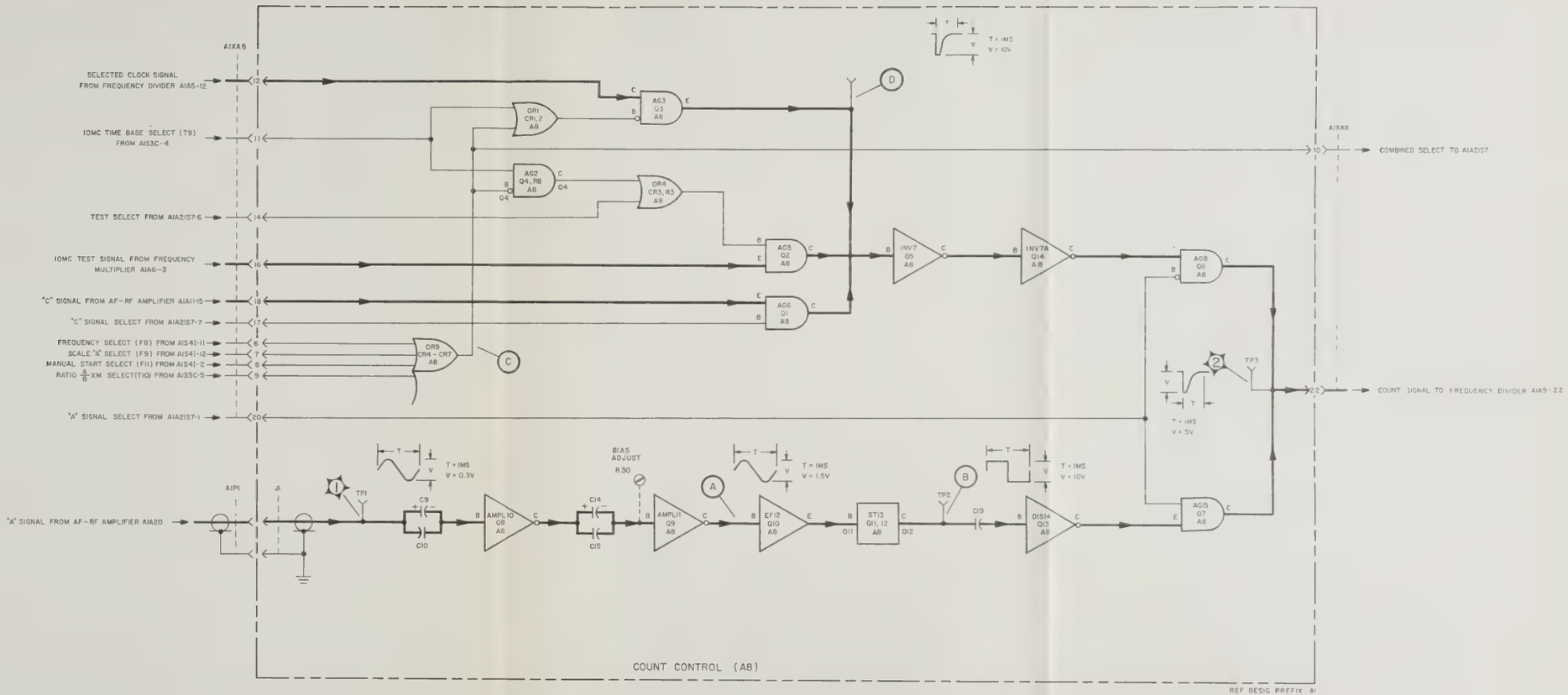

Figure 4-17. Count Control, Functional and Servicing Block Diagram

4-13. CYCLE CONTROL.

a. CYCLE CONTROL FUNCTIONAL DESCRIPTION. — The cycle control functional section produces all signals necessary for controlling the display and memory and for recycling the counter. It is constructed on printed circuit board A1A7. Figure 4-19 shows the functional relationship of all circuits in the cycle control, and gives test points and performs as an aid in trouble shooting.

Input to the cycle control is the count signal obtained from the gate control functional section. When the gate opens the gate signal causes SW7 to conduct and the GATE lamp to light. At the same time the 150-millisecond single-shot SS8, consisting of A1A7Q7 and A1A7Q8, is triggered. Its output is coupled through OR6 to SW7 to insure that the GATE lamp remains lighted for at least that duration. This permits the operator to observe the operation of the GATE lamp when short gate times are chosen. When gate times longer than 150 milliseconds are chosen the GATE lamp is controlled by the gate signal.

When the gate closes, the gate signal (or output of SS8) triggers the display time generator DG11 consisting of A1A7Q10 and A1A7Q11. This generator produces an output after a time delay determined by the setting of the DISPLAY control A1R1. The output of the display time generator triggers INV12 and EF13. These transistors (A1A7Q12 and A1A7Q13) produce the reset output. In manual reset the +12-volt output of the RESET switch A1S6 is fed through A1A7CR10 to the output of EF13.

As the GATE lamp goes off the 10-millisecond single-shot SS5, consisting of A1A7Q4 and A1A7Q5, is triggered. Its output is dc-coupled to INV4 and ac-coupled by A1A7C1 to EF2. These two transistors (A1A7Q1 and A1A7Q2) produce the memory transfer pulse and memory clear set pulse, respectively. If memory operation is not required, INV1 conducts, causing INV4 and EF2 to produce proper outputs for track operation. Figure 4-18 is a timing diagram for the cycle control functional section.

b. CYCLE CONTROL TROUBLE SHOOTING. — To trouble shoot the cycle control, follow the procedure given in table 4-13.

c. USEFUL ILLUSTRATIONS. — Illustrations useful in maintaining this functional section are: figures 4-18, 4-19, 5-42, and 5-70.

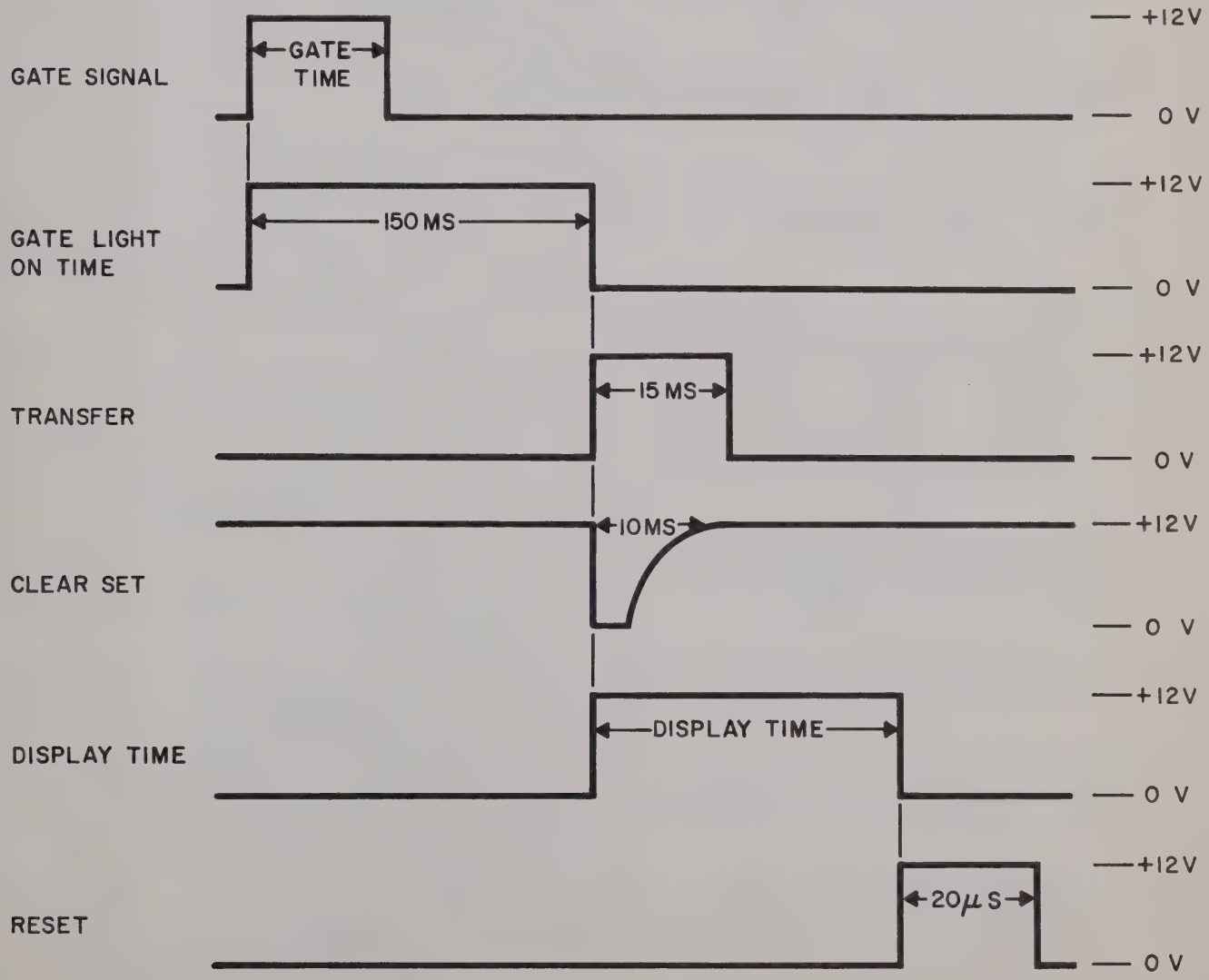

Figure 4-18. Cycle Control, Timing Diagram

TABLE 4-13. CYCLE CONTROL TROUBLE SHOOTING

STEP	ACTION	RESULTS	NEXT STEP
1	Set the controls on the front panel of the counter as follows: POWER switch to STORE. FUNCTION switch to FREQ. Time-base switch to 10^6. DISPLAY control to MIN. Observe waveform at test point B and compare with that shown in figure 4-19.	Waveform is correct.	2
		If waveform is incorrect, check A1A7Q7, A1A7Q8, and A1A7CR5.	
2	Observe waveform at test point C and compare with that shown in figure 4-19.	Waveform is correct.	3
		If waveform is incorrect, check A1A7Q9, A1A7Q10, A1A7Q11, A1A7C6, A1A7CR7, and A1A7CR22.	
3	Observe waveform at test point D and compare with that shown in figure 4-19.	Waveform is correct.	4
		If waveform is incorrect, check A1A7C4 and A1R1.	
4	Observe waveform at test point 3 and compare with that shown in figure 4-19.	Waveform is correct.	5
		If waveform is incorrect, check A1A7Q12, A1A7Q13, and A1A7CR11.	
5	Observe lighting of GATE lamp.	GATE lamp cycles off and on.	6
		If GATE lamp does not light, or remains lighted all the time, check A1A7Q6.	
6	Observe waveform at test point A and compare with that shown in figure 4-19.	Waveform is correct.	7
		If waveform is incorrect, check A1A7Q4, A1A7Q5, and A1A7CR3.	
7	Observe waveform at test point 2 and compare with that shown in figure 4-19.	Waveform is correct.	8
		If waveform is incorrect, check A1A7Q1.	
8	Observe waveform at test point 1 and compare with that shown in figure 4-19.	Waveform is correct.	9
		If waveform is incorrect, check A1A7Q2 and and A1A7CR21.	
9	Change POWER switch to TRACK and monitor voltage at test point 1.	Voltage is more negative than +2 volts.	10
		If voltage is more positive than +2 volts, check A1A7Q3, A1A7CR1, and A1A7CR2.	
10	Press RESET switch and monitor voltage at test point A.	Voltage is more negative than +2 volts.	11
		If voltage is more positive than +2 volts, check A1A7CR9.	
11	Press RESET switch and monitor voltage at test point 3.	If voltage is more positive than +10 volts, check loading on all outputs of A1A7.	
		If voltage is more negative than +10 volts, check A1A7CR10.	

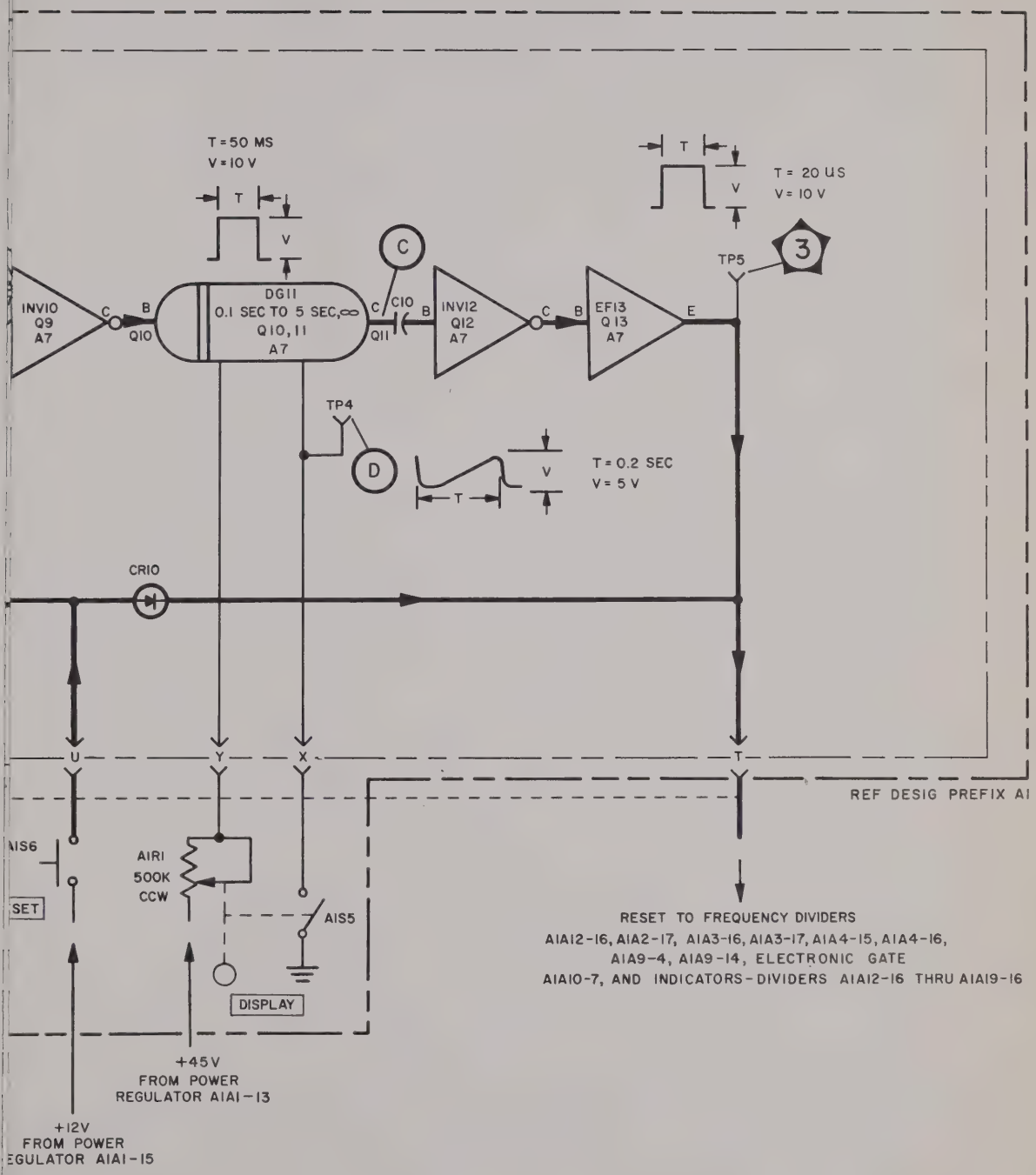

Figure 4-19. Cycle Control, Functional and Servicing Block Diagram

TABLE 4-13. CYCLE CONTROL TROUBLE SHOOTING

STEP	ACTION	RESULTS	NEXT STEP
1	Set the controls on the front panel of the counter as follows: POWER switch to STORE. FUNCTION switch to FREQ. Time-base switch to 10^6. DISPLAY control to MIN. Observe waveform at test point B and compare with that shown in figure 4-19.	Waveform is correct.	2
		If waveform is incorrect, check A1A7Q7, A1A7Q8, and A1A7CR5.	
2	Observe waveform at test point C and compare with that shown in figure 4-19.	Waveform is correct.	3
		If waveform is incorrect, check A1A7Q9, A1A7Q10, A1A7Q11, A1A7C6, A1A7CR7, and A1A7CR22.	
3	Observe waveform at test point D and compare with that shown in figure 4-19.	Waveform is correct.	4
		If waveform is incorrect, check A1A7C4 and A1R1.	
4	Observe waveform at test point 3 and compare with that shown in figure 4-19.	Waveform is correct.	5
		If waveform is incorrect, check A1A7Q12, A1A7Q13, and A1A7CR11.	
5	Observe lighting of GATE lamp.	GATE lamp cycles off and on.	6
		If GATE lamp does not light, or remains lighted all the time, check A1A7Q6.	
6	Observe waveform at test point A and compare with that shown in figure 4-19.	Waveform is correct.	7
		If waveform is incorrect, check A1A7Q4, A1A7Q5, and A1A7CR3.	
7	Observe waveform at test point 2 and compare with that shown in figure 4-19.	Waveform is correct.	8
		If waveform is incorrect, check A1A7Q1.	
8	Observe waveform at test point 1 and compare with that shown in figure 4-19.	Waveform is correct.	9
		If waveform is incorrect, check A1A7Q2 and and A1A7CR21.	
9	Change POWER switch to TRACK and monitor voltage at test point 1.	Voltage is more negative than +2 volts.	10
		If voltage is more positive than +2 volts, check A1A7Q3, A1A7CR1, and A1A7CR2.	
10	Press RESET switch and monitor voltage at test point A.	Voltage is more negative than +2 volts.	11
		If voltage is more positive than +2 volts, check A1A7CR9.	
11	Press RESET switch and monitor voltage at test point 3.	If voltage is more positive than +10 volts, check loading on all outputs of A1A7.	
		If voltage is more negative than +10 volts, check A1A7CR10.	

NOTES

1. Primary signal paths weighted. Feedback paths weighted and dashed.
2. ——— — — ——— indicates assembly boundaries.
3. Names of panel controls and connectors are enclosed in boxes.
4. Dc voltages are preceded by "+" or "−".
5. Waveforms recorded with an AN/USM-140B Oscilloscope.
   Control settings:
   Sensitivity: 5 v/cm.
   Sweep time: 2 ms/cm, 1 sec/cm.
6. Explanation of symbols placed at waveforms.
   T – Duration of the portion of waveform indicated.
   V – Peak-to-peak voltage.
7. Dc voltages are measured with a CCUH-801 Dc Differential Voltmeter.
8. The letters CCW, placed adjacent to the appropriate terminals of A1R1, indicate the direction of rotation viewed from the shaft end.
9. Abbreviations within logic or circuit blocks are as follows:

AG	AND Gate
DG	Delay Generator
EF	Emitter Follower
INV	Inverter
OR	OR Gate
SS	Single Shot
SW	Switch

   Identification within logic blocks is as follows: The first line identifies the logic function symbol on the drawing. The symbols are numbered in general data flow sequence. The second line identifies the major parts associated with the logic function. The third line identifies the assembly containing the logic function.
10. Letters and numbers outside of some logic or circuit blocks indicate transistor elements.
11. Operating control settings:
    POWER switch to STORE.
    FUNCTION switch to FREQ.
    Time-base switch to 10^8.
    DISPLAY control maximum counterclockwise.

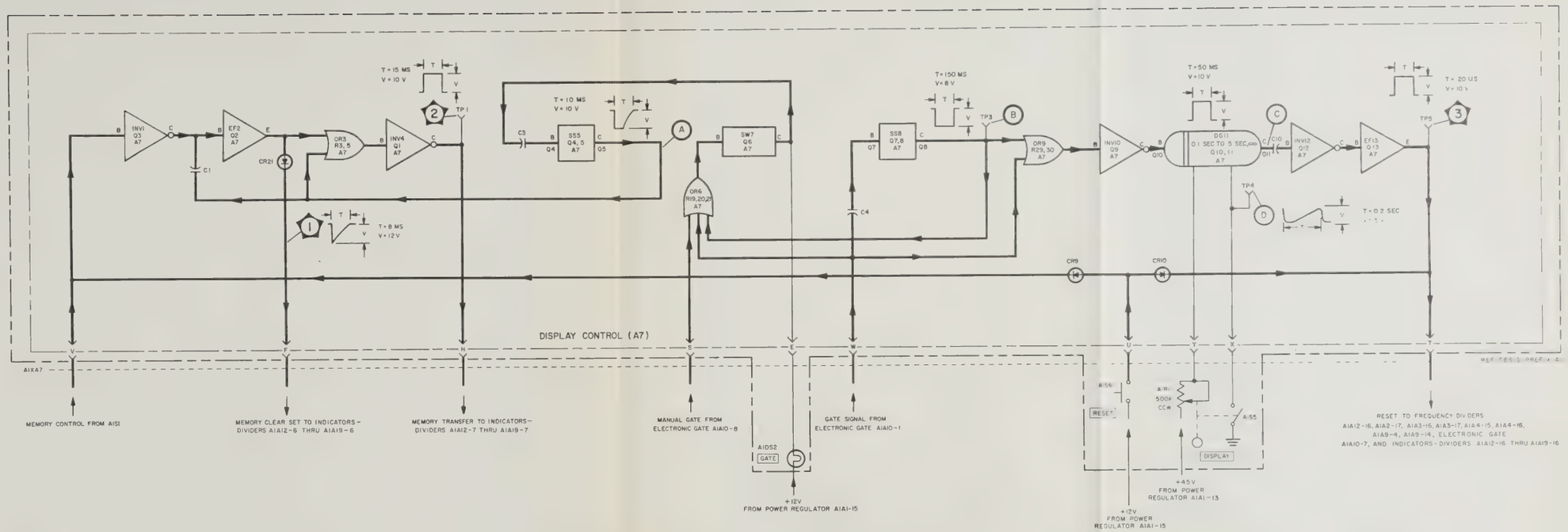

Figure 4-19. Cycle Control, Functional and Servicing Block Diagram

4-14. COUNT DECADES.

a. COUNT DECADE FUNCTION DESCRIPTION. — The count decade functional section consists of three types of counting decades. The first type is capable of counting at a 100-mc rate; one of this type is included in the counter. It is constructed on printed circuit board A1A9. The second type is capable of counting at a 10-mc rate; two of this type are included in the counter. These two decades are constructed on the same printed circuit boards as their associated readout circuits, A1A17 and A1A18. The third type is capable of counting at a 300-kc rate; five of this type are included in the counter. These five decades are constructed on the same printed circuit boards as their associated readout circuits, A1A12 through A1A16. Figure 4-24 shows the functional relationship of all circuits in the count decades, and gives test points and waveforms as an aid in trouble shooting.

Each count decade consists of four bi-stable multivibrators (flip-flops) coupled together in such a way so as to produce one output pulse for each ten input pulses. Figure 4-20 shows a typical flip-flop used in the 10-mc and 300-kc counting rate decades. Reference designators assigned in figure 4-20 apply to figure 4-20 only.

The input to the flip-flop is applied at the junction of capacitors C1 and C2, the output is taken at the collector of Q2. Resistors R1 and R2 and diodes CR3 and CR4 form steering networks which steer input pulses to the base of the saturated transistor. These pulses cut off this transistor and cause the flip-flop to change state. The resulting output is a train of pulses with half the repetition rate of the input pulses. Diodes CR1, CR2, CR5, and CR6 are used in the 10-mc counting rate decades to permit this increased speed.

Figure 4-21 is a simplified schematic diagram showing the method of coupling the four flip-flops

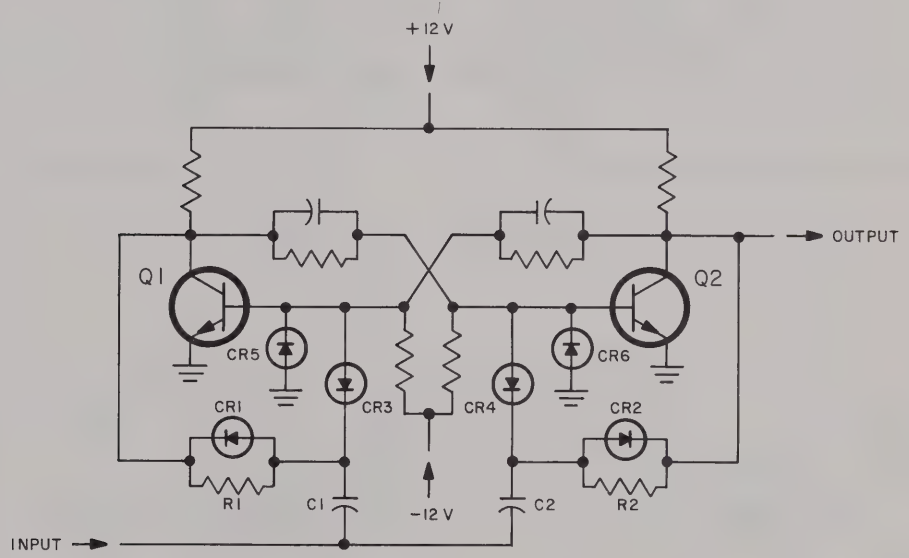

Figure 4-20. Typical Low-Speed Count Decade Flip-Flop, Simplified Schematic Diagram

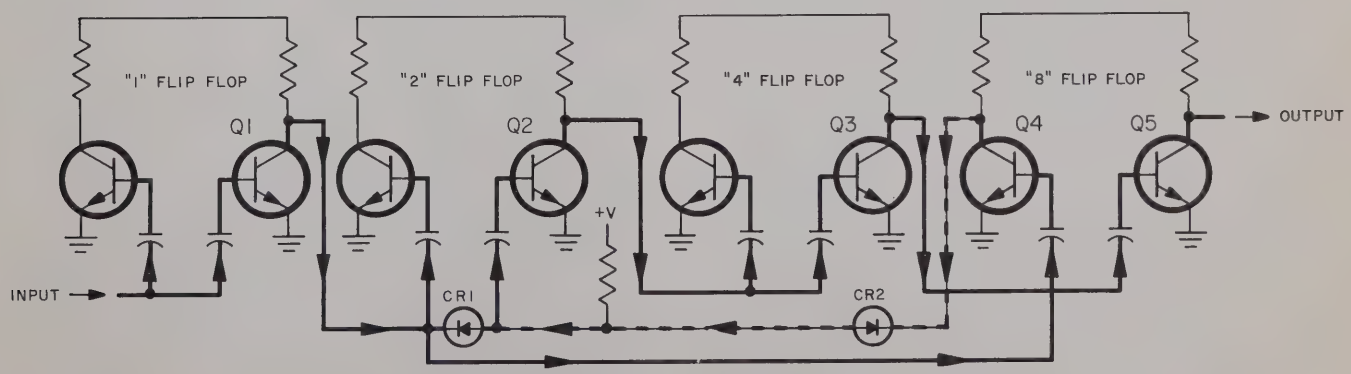

Figure 4-21. Coupled Low-Speed Count Decade Flip-Flops, Simplified Schematic Diagram

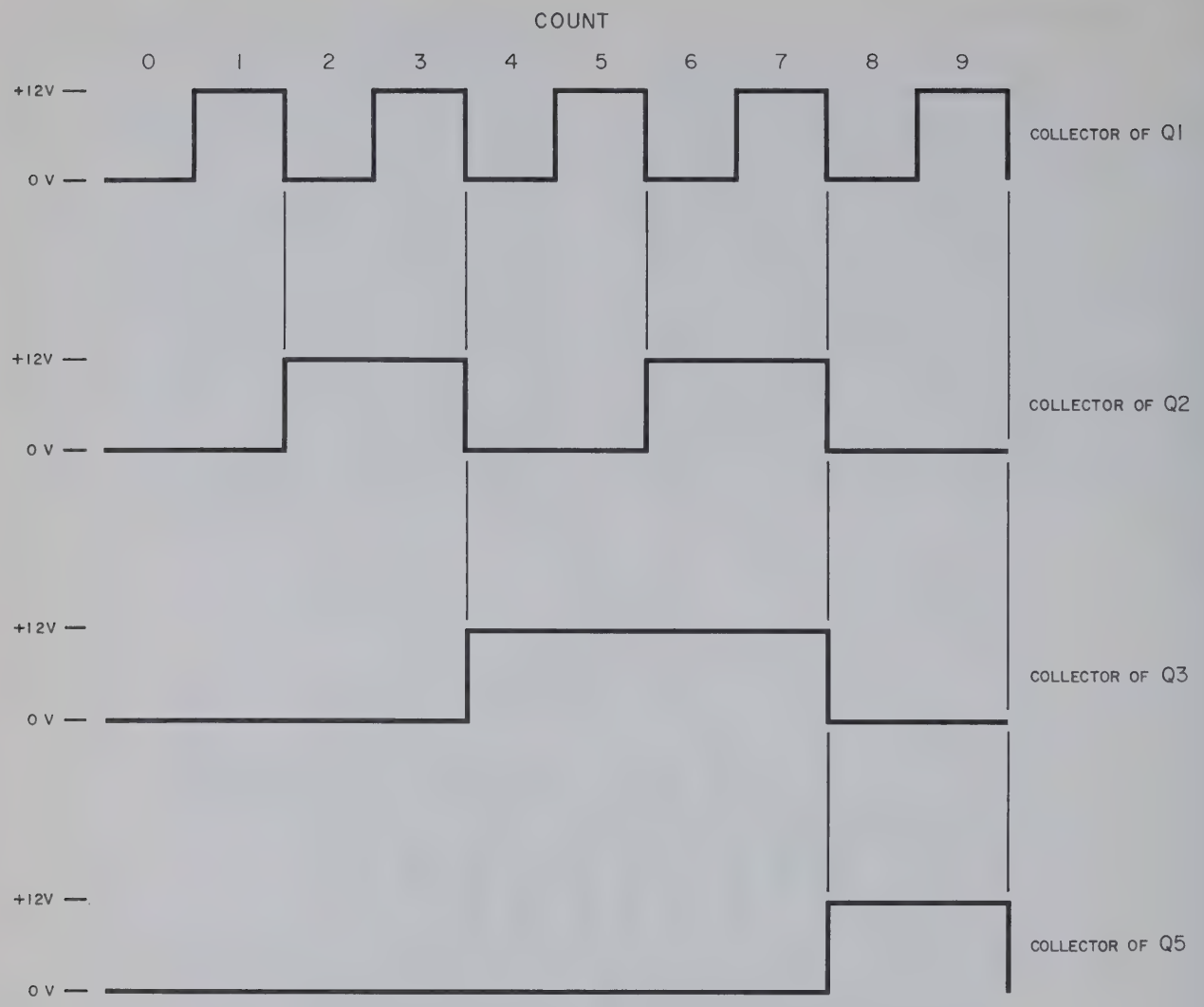

Figure 4-22. Coupled Count Decade Flip-Flops, Collector Waveforms

together to provide one output pulse for each ten input pulses. Figure 4-22 shows the idealized waveforms at the output of each flip-flop. At the count of zero, Q1, Q2, Q3, and Q5 are saturated and their collectors are at approximately zero volts. Diodes CR1 and CR2 form an AND gate at the input to the Q2-side of the "2" flip-flop. This AND gate prevents the "2" flip-flop and "4" flip-flop from changing state after the eighth input pulse is applied to the count decade. Since the Q7-side of the "8" flip-flop is driven directly by "1" flip-flop, the tenth input pulse causes the "8" flip-flop to change state. This, in effect causes the "8" flip-flop to change state at the counts of eight and ten. The change of state at the count of ten is used as the decade output. The 10-mc and 300-kc counting rate decades operate in this manner. Outputs are taken from both collectors of each flip-flop to drive the readout decoding circuits. An AND gate is provided on each decade which may be selected to provide the appropriate scaled frequency A when the counter is operated in the scale A mode.

The 100-mc counting rate count decade utilizes four coupled flip-flops to produce a similar divide-by-ten action. The flip-flop circuits and method of coupling are different from the slower speed count decades. Figure 4-23 shows a typical flip-flop used in this count decade.

Transistors Q1 and Q2 form the flip-flop transistors, Q3 and Q4 are trigger transistors. The input to the binary is applied at the junction of capacitors C1 and C2, the output is taken at the junction of the load resistor R4 and inductor L2 in the collector circuit of Q2. Diodes CR1 and CR2 form steering networks which steer input pulses to the base of the cutoff trigger transistor. These pulses cause the trigger transistor to start conducting, thereby lowering its collector voltage to approximately zero volts. This negative-going voltage triggers both flip-flop transistors; it is coupled to the base of the conducting transistor through C3 or C4, and to the collector of the cutoff transistor through R1 or R2. The regeneration action of the flip-flop completes the change of

state. The diodes in the base circuits of the flip-flop prevent saturation of either Q1 or Q2.

The input pulses to the 100-mc decade are passed through four amplifier stages EF1, AMPL2, AMPL4, and AMPL5. AND gate AG3 allows the input signal to be counted when the gate control signal is at the zero-volt level. The output of AMPL5 is coupled to TRIG6 and TRIG7 which drive FF8. Flip-flop FF8 divides the input pulse repetition rate by two; the output of the flip-flop is amplified by EF9, AMPL10, AMPL11, and EF12 and applied to the inputs of each of the other three flip-flops. Diodes A1A9CR24, A1A9CR27, A1A9CR34, A1A9CR37, A1A9CR40, A1A9CR45, A1A9CR50, A1A9CR51, A1A9CR53, and A1A9CR61 steer the output pulses from EF12 to the proper trigger transistor in the proper sequence to produce one output pulse from the FF21 for every ten input pulses to the decade. Emitter follower EF22 provides the decade output.

The outputs from one side of each flip-flop are supplied to additional circuits located on the printed circuit board A1A19. The decade output pulse is applied to the two inverters INV31 and INV32. The carry output pulse to the following count decade is taken at the output of INV31. The output of INV32 drives an AND gate AD33 which provides the scaled count signal when the counter is operated in the SCALE A MODE. The signal from each flip-flop on count decade A1A9 is applied to the input of a separate two-stage inverter. These inverters provide TRUE and FALSE signals of the proper voltage level to drive the readout circuits.

b. COUNT DECADE TROUBLE SHOOTING. — The first step in trouble shooting the count decade section is to determine in which particular decade the fault lies. This can be done by observing the readout display associated with each decade, one at a time, until the faulty decade is located. Check the 100-mc decade and inverter circuits first. If this decade is operating properly, check the amplifiers which supply the carry pulse to the next decade. If they are operating properly, check the remaining decades in the following order: A1A18, A1A17, A1A16, A1A15, A1A14, A1A13, and A1A12.

Problem symptoms in a particular count decade fall into three categories: (1) improper decade output, (2) absence of decade output, and (3) absence of scale output when the scale gate is selected. Because the circuits of count decades A1A12 through A1A18 are similar, the trouble-shooting procedures for those decades are identical. In trouble shooting for improper or no output from any of these decades, the first

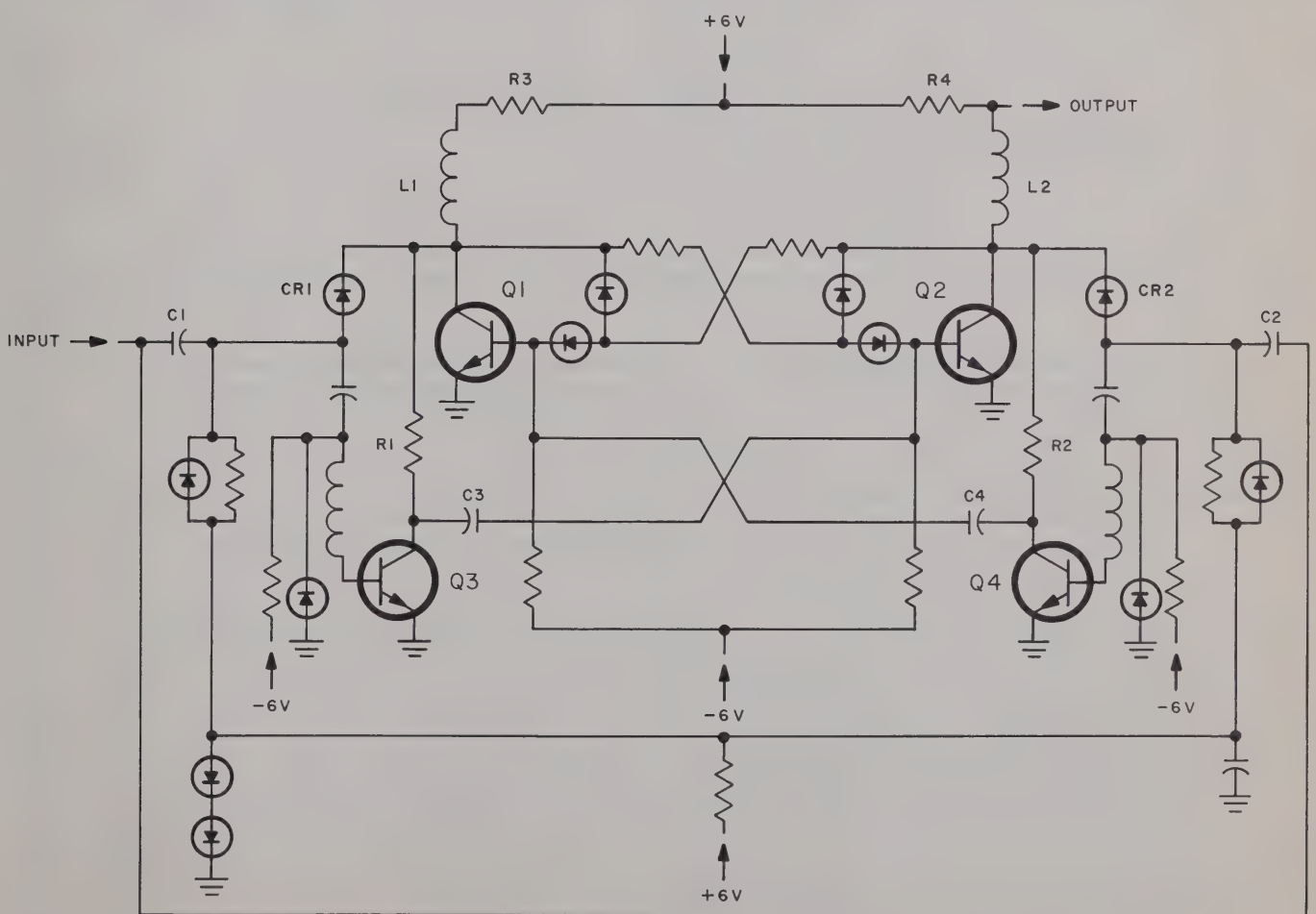

Figure 4-23. Typical High-Speed Count Flip-Flop, Simplified Schematic Diagram

step is to check that each flip-flop can be made to change state by shorting the collector of the cutoff transistor to ground. If a flip-flop does change state but does not operate with an input signal, check its triggering circuits. If the decade divides the repetition rate of the input signal by a factor other than ten, check the AND gate diodes at the input of FF35 and FF41. If the decade does not produce a scale frequency output, check the scale gate circuits AG38 and AG44.

Problems in the 100-mc decade can originate in the flip-flops, the coupling between flip-flops, or in the inverter circuits which drive the readout display. Problems in this decade can be caused by improper adjustment. Before the trouble-shooting procedure is started, check for proper adjustment. The procedure for adjusting the decade is given in paragraph 5-4g. When trouble shooting the amplifiers, AND gate, and first flip-flop circuits follow the input signal through the individual stages. The input signal should be present at the output of AMPL5 if A1A9Q3 is kept at cutoff (count gate open). The proper output of the "1" flip-flop is a pulse train of one-half the input repetition rate. If this flip-flop is found to be bad, check its ability to change state by shorting the collector of the cutoff transistor to ground. If the flip-flop does change state but does not operate with an input signal, check its triggering circuits. The signal from the output of the FF8 can be followed through amplifiers EF9, AMPL10, AMPL11, and EF12.

Check the remaining three flip-flops for their ability to change state, by shorting the collector of each cutoff transistor to ground. If a flip-flop is found which does not change state, check the parts which make up the stage. If all flip-flops do change state, the cause of trouble may be a bad trigger circuit. Finally, check the coupling diodes between the flip-flops. When the faulty part has been replaced, the output signal from the "8" flip-flop can be followed through emitter follower EF22 and inverters INV31 and INV32 on the digital display indicator A1A19. If the decade does not produce a scale frequency output, check the scale gate circuit AG33. When all flip-flops are operating properly the output signal from each can be followed through the inverter stages INV23 through INV30 on the digital display indicator printed circuit board A1A19.

Table 4-14 is the count decade trouble shooting chart.

c. USEFUL ILLUSTRATIONS. — Illustrations useful in maintaining this functional section are: figures 4-20, 4-21, 4-22, 4-23, 4-24, 5-47, 5-48, 5-49, 5-71, 5-72, 5-73, 5-74, and 5-75.

TABLE 4-14. COUNT DECADES TROUBLE SHOOTING

STEP	ACTION	RESULTS	NEXT STEP
	COUNT DECADES ON A1A12 THROUGH A1A16		
	Note Test point designations in this column refer to test points on the applicable assembly.	Note Prefix all reference designations in this column by the applicable assembly number.	
1	Set the controls on the front panel of the counter as follows: POWER switch to TRACK. FUNCTION switch to TIME B ⟶ C. Mode selector switch to SEP. Press RESET switch. Turn B TRIGGER VOLTS control in either direction until the GATE lamp goes on. Rotate time-base switch until digital display indicator associated with faulty count decade changes display once each second. Observe waveform at test point 5 and compare with that shown in figure 4-24.	Waveform is correct.	2
		If voltage does not change, check previous decade.	
2	Observe waveform at test point X and compare with that shown in figure 4-24.	Waveform is correct.	4
		Waveform is absent.	3

TABLE 4-14. (Continued)

STEP	ACTION	RESULTS	NEXT STEP
COUNT DECADES ON A1A12 THROUGH A1A16 (cont)			
3	Monitor voltage at test point X. Determine cutoff transistor in FF40 and short its collector momentarily to ground.	If voltage changes by more than 10 volts and remains at that level, check CR17 and CR18.	
		If voltage does not change, check Q10 and Q11.	
		If voltage changes by more than 10 volts but returns to its original level, check Q10 and Q11.	
4	Observe waveform at test point Y and compare with that shown in figure 4-24.	Waveform is correct.	6
		Waveform is absent.	5
5	Monitor voltage at test point Y. Determine cutoff transistor in FF41 and short its collector momentarily to ground.	If voltage changes by more than 10 volts and remains at that level, check CR19, CR21, CR20, and CR22.	
		If voltage does not change, check Q12 and Q13.	
		If voltage changes by more than 10 volts but returns to its original level, check Q12 and Q13.	
6	Observe waveform at test point Z and compare with that shown in figure 4-24.	Waveform is correct.	8
		Waveform is absent.	7
7	Monitor voltage at test point Z. Determine cutoff transistor in FF42 and short its collector temporarily to ground.	If voltage changes by more than 10 volts and remains at that level, check CR23 and CR24.	
		If voltage does not change, check Q14 and Q15.	
		If voltage changes by more than 10 volts but returns to its original level, check Q14 and Q15.	
8	Observe waveform at test point 6 and compare with that shown in figure 4-24.	If waveform is correct, check load on decade output.	9
		Waveform is absent.	
9	Monitor voltage at test point 6. Determine cutoff transistor in FF43 and short its collector momentarily to ground.	If voltage changes by more than 10 volts and remains at that level, check Q18, CR28, and CR26.	
		If voltage does not change, check Q16, Q17, Q18, and CR22.	

TABLE 4-14. (Continued)

STEP	ACTION	RESULTS	NEXT STEP
COUNT DECADES ON A1A12 THROUGH A1A16 (cont)			
9 (cont)		If voltage changes by more than 10 volts but returns to its original level, check Q16, Q17, Q18, and CR22.	
10	Set the controls on the front panel of the counter as follows: POWER switch to TRACK. FUNCTION switch to TIME B→C. Mode selector switch to SEP. Press RESET switch. Turn B TRIGGER VOLTS control slowly in either direction, until the GATE lamp goes on. Rotate time-base switch until digital display indicator associated with faulty count decade changes display once each second. Observe waveform at test point 3 and compare with that shown in figure 4-24.	Waveform is correct.	11
		Waveform is absent.	
11	Observe waveform at test point U and compare with that shown in figure 4-24.	Waveform is correct.	13
		Waveform is absent.	12
12	Monitor voltage at test point U. Determine cutoff transistor in FF34 and short its collector momentarily to ground.	If voltage changes by more than 10 volts and remains at that level, check CR17, CR18, CR20, and CR21.	
		If voltage does not change, check Q10, Q11, CR19, and CR20.	
		If voltage changes by more than 10 volts but returns to its original level, check Q10, Q11, CR19, and CR20.	
13	Observe waveform at test point V and compare with that shown in figure 4-24.	Waveform is correct.	15
		Waveform is absent.	14
14	Monitor voltage at test point V. Determine cutoff transistor in FF35 and short its collector momentarily to ground.	If voltage changes by more than 10 volts and remains at that level, check CR23, CR24, CR27, CR28, CR29, and CR30.	
		If voltage does not change, check Q12, Q13, CR25, and CR26.	
		If voltage changes by more than 10 volts but returns to its original level, check Q12, Q13, CR25, and CR26.	
15	Observe waveform at test point W and compare with that shown in figure 4-24.	Waveform is correct.	17
		Waveform is absent.	16

TABLE 4-14. (Continued)

STEP	ACTION	RESULTS	NEXT STEP
	COUNT DECADES ON A1A12 THROUGH A1A16 (cont)		
16	Monitor voltage at test point W. Determine cutoff transistor in FF36 and short its collector momentarily to ground.	If voltage changes by more than 10 volts and remains at that level, check CR31, CR32, CR35, and CR36.	
		If voltage does not change, check Q14, Q15, CR33, and CR34.	
		If voltage changes by more than 10 volts but returns to its original level, check Q14, Q15, CR33, and CR34.	
17	Observe waveform at test point 4 and compare with that shown in figure 4-24.	If waveform is correct, check load on decade output.	
		Waveform is absent.	18
18	Monitor voltage at test point 4. Determine cutoff transistor in FF37 and short its collector momentarily to ground.	If voltage changes by more than 10 volts and remains at that level, check Q18, CR37, CR38, CR41, and CR42.	
		If voltage does not change, check Q16, Q17, Q18, CR29, CR39, and CR40.	
		If voltage changes by more than 10 volts but returns to its original level, check Q16, Q17, Q18, CR29, CR39, and CR40.	
	COUNT DECADE A1A9		
19	Set the controls on the front panel of the counter as follows: POWER switch to TRACK. FUNCTION switch to TIME B⟶C. Time-base switch to 1. Mode selector switch to SEP. Press RESET switch. Turn B TRIGGER VOLTS control slowly in either direction until GATE lamp goes on. Observe waveform at test point A and compare with that shown in figure 4-24.	Waveform is correct.	20
		If waveform is incorrect, check A1A9Q1.	
20	Observe waveform at test point B and compare with that shown in figure 4-24.	Waveform is correct.	21
		If waveform is incorrect, check A1A9Q2, A1A9Q3, A1A9CR1, A1A9CR2, and A1A9CR3.	
21	Observe waveform at test point C and compare with that shown in figure 4-24.	Waveform is correct.	22
		If waveform is incorrect, check A1A9Q4, A1A9Q5, A1A9CR4, A1A9CR5, A1A9CR6, A1A9CR7, and A1A9CR8.	

TABLE 4-14. (Continued)

STEP	ACTION	RESULTS	NEXT STEP
COUNT DECADE A1A9 (cont)			
22	Observe waveform at test point E and compare with that shown in figure 4-24.	Waveform is correct.	24
		If lower level of waveform is more negative than +0. 8 volt, check A1A9CR16 and A1A9CR17.	
		If voltage change is less than 4 volts, check A1A9Q9, A1A9Q10, A1A9CR18, A1A9CR19, and A1A9CR20.	
		Waveform is absent.	23
23	Monitor voltage at test point E. Determine cutoff transistor in FF8 and short its collector momentarily to ground.	If voltage changes by more than 4 volts and remains at that level, check A1A9Q6, A1A9Q9, A1A9CR9, A1A9CR10, A1A9CR11, A1A9CR14, A1A9CR15, A1A9CR18, A1A9CR19, and A1A9CR20.	
		If voltage changes by less than 4 volts, check A1A9Q9, A1A9Q10, A1A9CR18, A1A9CR19, and A1A9CR20.	
		If voltage does not change, check A1A9Q7, A1A9Q8, A1A9CR12, A1A9CR13, A1A9CR16, and A1A9CR17.	
		If voltage changes by more than 4 volts but returns to its original level, check A1A9Q7, A1A9Q8, A1A9CR12, A1A9CR13, A1A9CR16, and A1A9CR17.	
		If voltage is more negative than +0. 8 volt or changes to more negative than +0. 8 volt, check A1A9CR12, A1A9CR13, A1A9CR16, and A1A9CR17.	
24	Observe waveform at test point D and compare with that shown in figure 4-24.	Waveform is correct.	25
		If lower level of waveform is more negative than +0. 8 volt, check CR12 and CR13.	
25	Observe waveform at test point F and compare with that shown in figure 4-24.	Waveform is correct.	26
		If waveform is incorrect, check A1A9Q10, A1A9Q11, and A1A9CR21.	
26	Observe waveform at test point G and compare with that shown in figure 4-24.	Waveform is correct.	27
		If waveform is incorrect, check A1A9Q12, A1A9Q13, A1A9CR22, and A1A9CR23.	
27	Observe waveform at test point I and compare with that shown in figure 4-24.	Waveform is correct.	29

TABLE 4-14. (Continued)

STEP	ACTION	RESULTS	NEXT STEP
COUNT DECADE A1A9 (cont)			
27 (cont)		If lower level of waveform is more negative than +0. 8 volt, check A1A9CR30 and A1A9CR31.	
		Waveform is absent.	28
28	Monitor voltage at test point H. Determine cutoff transistor in FF15 and short its collector momentarily to ground.	If voltage changes by more than 4 volts and remains at that level, check A1A9Q14, A1A9Q17, A1A9CR24, A1A9CR25, A1A9CR26, A1A9CR27, A1A9CR32, A1A9CR33, A1A9CR34, and A1A9CR35.	
		If voltage changes by less than 4 volts, check A1A9Q15, A1A9Q16, A1A9CR24, A1A9CR27, A1A9CR34, A1A9CR37, A1A9CR50, and A1A9CR53.	
		If voltage does not change, check A1A9Q14, A1A9Q15, A1A9Q16, A1A9Q17, A1A9CR28, A1A9CR29, A1A9CR30, and A1A9CR31.	
		If voltage changes by more than 4 volts but returns to its original level, check A1A9Q14, A1A9Q15, A1A9Q16, A1A9Q17, A1A9CR28, A1A9CR29, A1A9CR30, and A1A9CR31.	
		If voltage is more negative than +0. 8 volt or changes to more negative than +0. 8 volt, check A1A9CR30 and A1A9CR31.	
29	Observe waveform at test point K and compare with that shown in figure 4-24.	Waveform is correct.	31
		If lower level of waveform is more negative than +0. 8 volt, check A1A9CR43 and A1A9CR44.	
		Waveform is absent.	30
30	Monitor voltage at test point J. Determine cutoff transistor in FF18 and short its collector momentarily to ground.	If voltage changes by more than 4 volts and remains at that level, check A1A9Q18, A1A9Q21, A1A9CR37, A1A9CR38, A1A9CR39, A1A9CR40, A1A9CR45, A1A9CR46, A1A9CR47, A1A9CR48, A1A9CR49, and A1A9CR80.	
		If voltage changes by less than 4 volts, check A1A9Q18, A1A9Q21, A1A9CR40, A1A9CR47, and A1A9CR51.	
		If voltage does not change, check A1A9Q18, A1A9Q19, A1A9Q20, A1A9Q21, A1A9CR41, A1A9CR42, A1A9CR43, and A1A9CR44.	

TABLE 4-14. (Continued)

STEP	ACTION	RESULTS	NEXT STEP
COUNT DECADE A1A9 (cont)			
30 (cont)		If voltage changes by more than 4 volts but returns to its original level, check A1A9Q18, A1A9Q19, A1A9Q20, A1A9Q21, A1A9CR41, A1A9CR42, A1A9CR43, and A1A9CR44.	
		If voltage is more negative than +0.8 volt or changes to more negative than +0.8 volt, check A1A9CR41 and A1A9CR42.	
31	Observe waveform at test point M and compare with that shown in figure 4-24.	Waveform is correct.	33
		If negative portion of waveform is less than +0.8 volt, check A1A9CR57 and A1A9CR58.	
		Waveform is absent.	
32	Monitor voltage at test point L. Determine cutoff transistor in FF20 and short its collector momentarily to ground.	If voltage changes by more than 4 volts and remains at that level, check A1A9Q22, A1A9Q25, A1A9CR51, A1A9CR52, A1A9CR53, A1A9CR59, A1A9CR60, A1A9CR61, A1A9CR62, and A1A9CR63.	
		If voltage changes by less than 4 volts, check A1A9Q22, A1A9Q25, A1A9Q26, A1A9CR24, and A1A9CR61.	
		If voltage does not change, check A1A9Q22, A1A9Q23, A1A9Q24, A1A9Q25, A1A9Q26, A1A9CR55, A1A9CR56, A1A9CR57, and A1A9CR58.	
		If voltage changes by more than 4 volts but returns to its original level, check A1A9Q22, A1A9Q23, A1A9Q24, A1A9Q25, A1A9Q26, A1A9CR55, A1A9CR56, A1A9CR57, and A1A9CR58.	
		If voltage is more negative than +0.8 volt or changes to more negative than +0.8 volt, check A1A9CR55 and A1A9CR56.	
33	Observe waveform at test point 2 and compare with that shown in figure 4-24.	Waveform is correct.	34
		If waveform is incorrect, check A1A9Q26.	
34	Observe waveform at test point N (on digital display indicator A1A19) and compare with that shown in figure 4-24.	Waveform is correct.	35
		If waveform is incorrect, check A1A19Q10 and A1A19CR17.	

TABLE 4-14. (Continued)

STEP	ACTION	RESULTS	NEXT STEP
COUNT DECADE A1A9 (cont)			
35	Observe waveform at test point P (on digital display indicator A1A19) and compare with that shown in figure 4-24.	Waveform is correct.	36
		If waveform is incorrect, check A1A19Q11, A1A19Q12, and A1A19CR18.	
36	Observe waveform at test point Q (on digital display indicator A1A19) and compare with that shown in figure 4-24.	Waveform is correct.	37
		If waveform is incorrect, check A1A19Q13 and A1A19Q14.	
37	Observe waveform at test point R (on digital display indicator A1A19) and compare with that shown in figure 4-24.	Waveform is correct.	38
		If waveform is incorrect, check A1A19Q15 and A1A19Q16.	
38	Observe waveform at test point S (on digital display indicator A1A19) and compare with that shown in figure 4-24.	Waveform is correct.	39
		If waveform is incorrect, check A1A19Q17 and A1A19Q18.	
39	Observe waveform at test point T (on digital display indicator A1A19) and compare with that shown in figure 4-24.	If waveform is correct, check readout circuits.	
		If waveform is incorrect, check A1A19Q19 and A1A19Q20.	

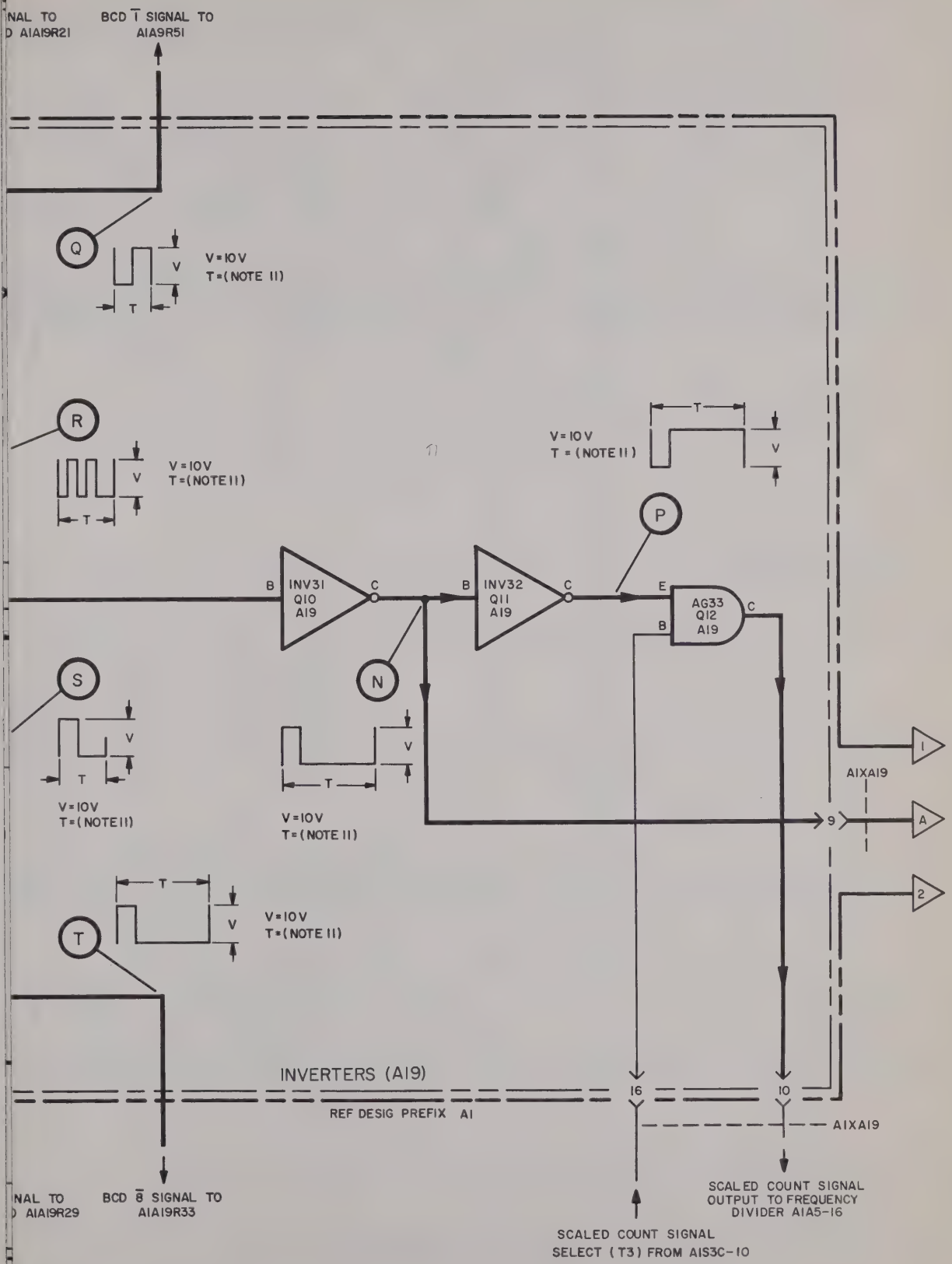

Figure 4-24. Count Decade, Functional and Servicing Block Diagram (Sheet 1 of 3)

NOTES

1. Primary signal paths weighted. Feedback paths weighted and dashed.
2. ——— — — ——— indicates assembly boundaries.
3. Dc voltages are preceded by "+" or "−".
4. Waveforms recorded with an AN/USM-140B Oscilloscope.
   Control settings:
   Sensitivity: 5 v/cm.
   Sweep time: 1 sec/cm.
5. Explanation of symbols placed at waveforms:
   T – Duration of the portion of waveform indicated.
   V – Peak-to-peak voltage.
6. Dc voltages are measured with a CCUH-801 Dc Differential Voltmeter.
7. Abbreviations within logic or circuit blocks are as follows:

AG	AND Gate
AMPL	Amplifier
EF	Emitter Follower
FF	Flip-Flop
INV	Inverter
OR	OR Gate

   Identification within logic blocks is as follows: The first line identifies the logic function symbol on the drawing. The symbols are numbered in general data flow sequence. The second line identifies the major parts associated with the logic function. The third line identifies the assembly containing the logic function.
8. Letters and numbers outside of some logic or circuit blocks indicate transistor elements.
9. Counter circuits of assemblies A1A17 and A1A18 are identical. Only A1A18 is shown in detail.
10. Counter circuits of assemblies A1A12 through A1A16 are identical. Only A1A16 is shown in detail.
11. Operating control settings:
    POWER switch to TRACK.
    FUNCTION switch to TIME B ⟶ C.
    Mode selector switch to SEP.
12. To corresponding parts on readout portion of same assembly:
    Example: On 10^3 Count Decade, corresponding parts are as listed at 10^2 Count Decade with prefix changed to A1A17.
13. To corresponding parts on readout portion of same assembly.
    Example: On 10^6 Count Decade, corresponding parts are as listed at 10^5 Count Decade with prefix changed to A1A13.

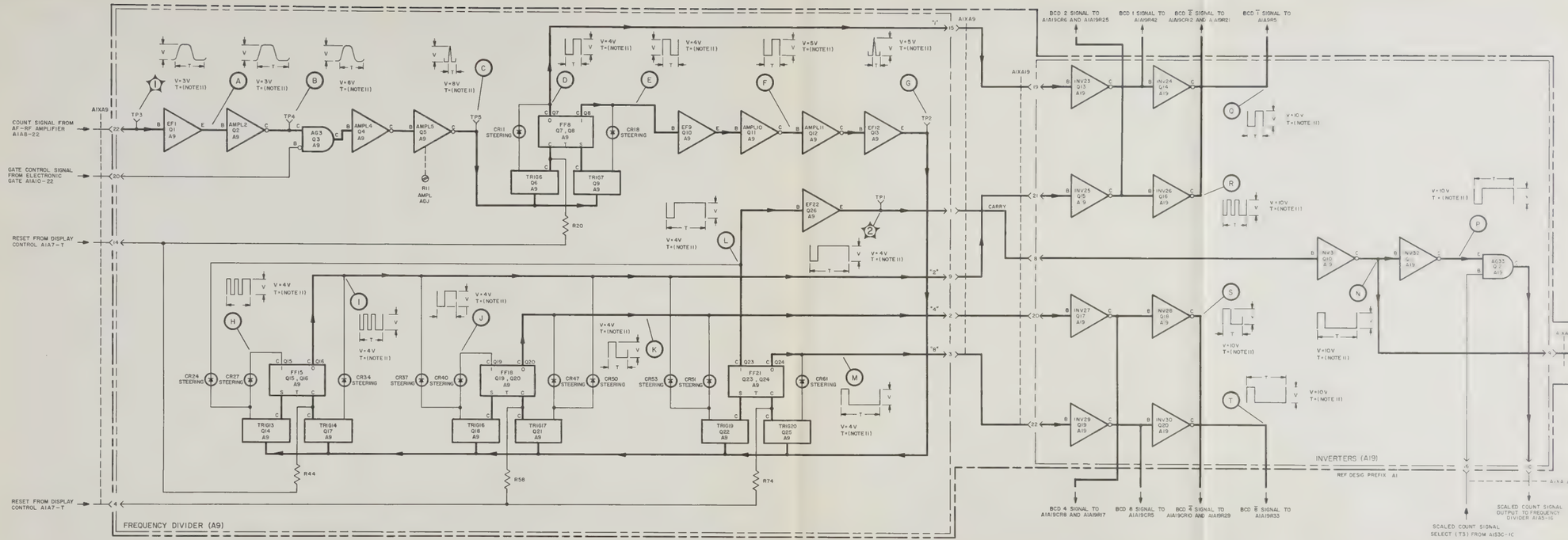

Figure 4-24. Count Decade, Functional and Servicing Block Diagram (Sheet 1 of 3)

NOTES

1. Primary signal paths weighted. Feedback paths weighted and dashed.

2. ——— — — ——— indicates assembly boundaries.

3. Dc voltages are preceded by "+" or "–".

4. Waveforms recorded with an AN/USM-140B Oscilloscope.

   Control settings:
   Sensitivity: 5 v/cm.
   Sweep time: 1 sec/cm.

5. Explanation of symbols placed at waveforms:

   T – Duration of the portion of waveform indicated.
   V – Peak-to-peak voltage.

6. Dc voltages are measured with a CCUH-801 Dc Differential Voltmeter.

7. Abbreviations within logic or circuit blocks are as follows:

AG	AND Gate
AMPL	Amplifier
EF	Emitter Follower
FF	Flip-Flop
INV	Inverter
OR	OR Gate

   Identification within logic blocks is as follows: The first line identifies the logic function symbol on the drawing. The symbols are numbered in general data flow sequence. The second line identifies the major parts associated with the logic function. The third line identifies the assembly containing the logic function.

8. Letters and numbers outside of some logic or circuit blocks indicate transistor elements.

9. Counter circuits of assemblies A1A17 and A1A18 are identical. Only A1A18 is shown in detail.

10. Counter circuits of assemblies A1A12 through A1A16 are identical. Only A1A16 is shown in detail.

11. Operating control settings:

    POWER switch to TRACK.
    FUNCTION switch to TIME B→C.
    Mode selector switch to SEP.

12. To corresponding parts on readout portion of same assembly:

    Example: On 10^3 Count Decade, corresponding parts are as listed at 10^2 Count Decade with prefix changed to A1A17.

13. To corresponding parts on readout portion of same assembly.

    Example: On 10^6 Count Decade, corresponding parts are as listed at 10^4 Count Decade with prefix changed to A1A13.

Figure 4-24. Count Decade, Functional and Servicing Block Diagram (Sheet 1 of 3)

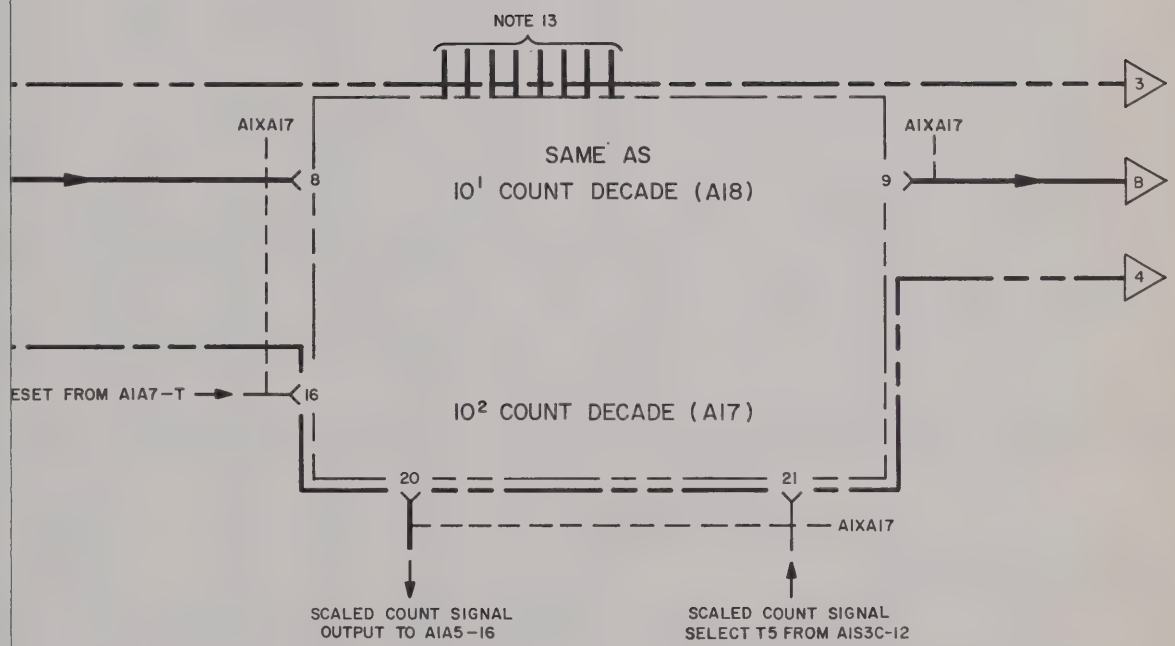

Figure 4-24. Count Decade, Functional and Servicing Block Diagram (Sheet 2 of 3)

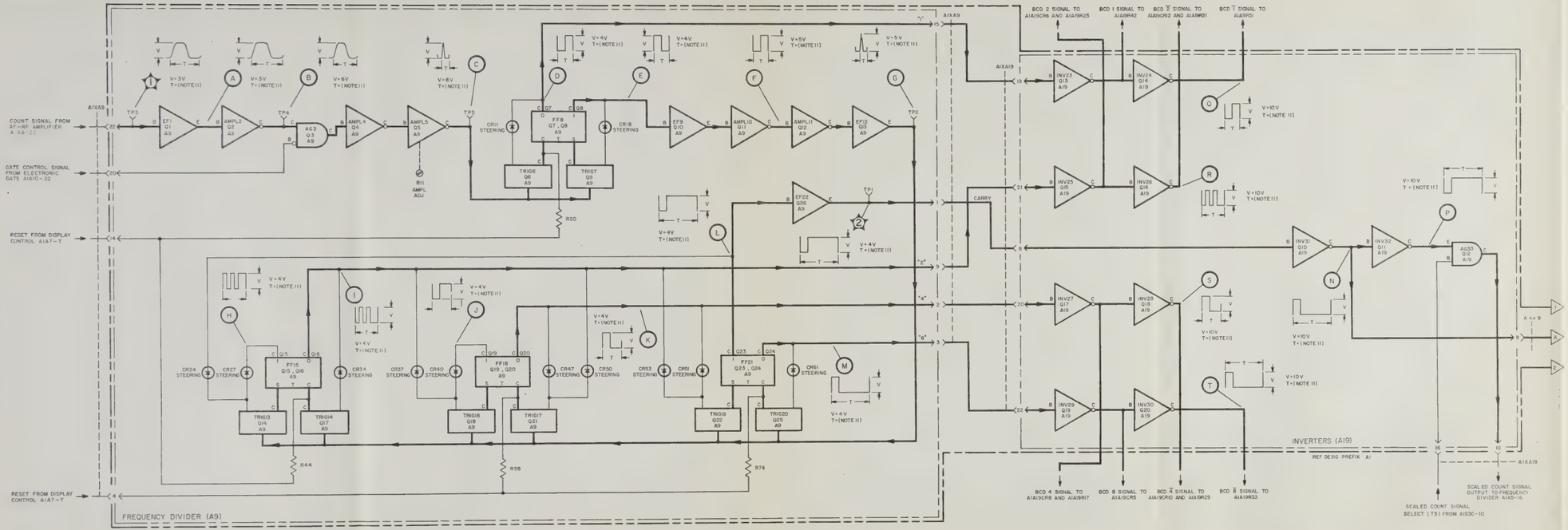

NOTES

1. Primary signal paths weighted. Feedback paths weighted and dashed.
2. ——— – – ——— indicates assembly boundaries.
3. Dc voltages are preceded by "+" or "–".
4. Waveforms recorded with an AN/USM-140B Oscilloscope.
   Control settings:
   Sensitivity: 5 v/cm
   Sweep time: 1 sec/cm
5. Explanation of symbols placed at waveforms:
   T – Duration of the portion of waveform indicated.
   V – Peak-to-peak voltage.
6. Dc voltages are measured with a CCUH-801 Dc Differential Voltmeter.
7. Abbreviations within logic or circuit blocks are as follows:

AG	AND Gate
AMPL	Amplifier
EF	Emitter Follower
FF	Flip-Flop
INV	Inverter
OR	OR Gate

   Identification within logic blocks is as follows: The first line identifies the logic function symbol on the drawing. The symbols are numbered in general data flow sequence. The second line identifies the major parts associated with the logic function. The third line identifies the assembly containing the logic function.
8. Letters and numbers outside of some logic or circuit blocks indicate transistor elements.
9. Counter circuits of assemblies A1A17 and A1A18 are identical. Only A1A18 is shown in detail.
10. Counter circuits of assemblies A1A12 through A1A16 are identical. Only A1A16 is shown in detail.
11. Operating control settings:
    POWER switch to TRACK
    FUNCTION switch to TIME B ⟶ C
    Mode selector switch to SEP
12. To corresponding parts on readout portion of same assembly:
    Example: On 10^3 Count Decade, corresponding parts are as listed at 10^2 Count Decade with prefix changed to A1A17.
13. To corresponding parts on readout portion of same assembly:
    Example: On 10^6 Count Decade, corresponding parts are as listed at 10^5 Count Decade with prefix changed to A1A13.

Figure 4-24. Count Decade, Functional and Servicing Block Diagram (Sheet 1 of 3)

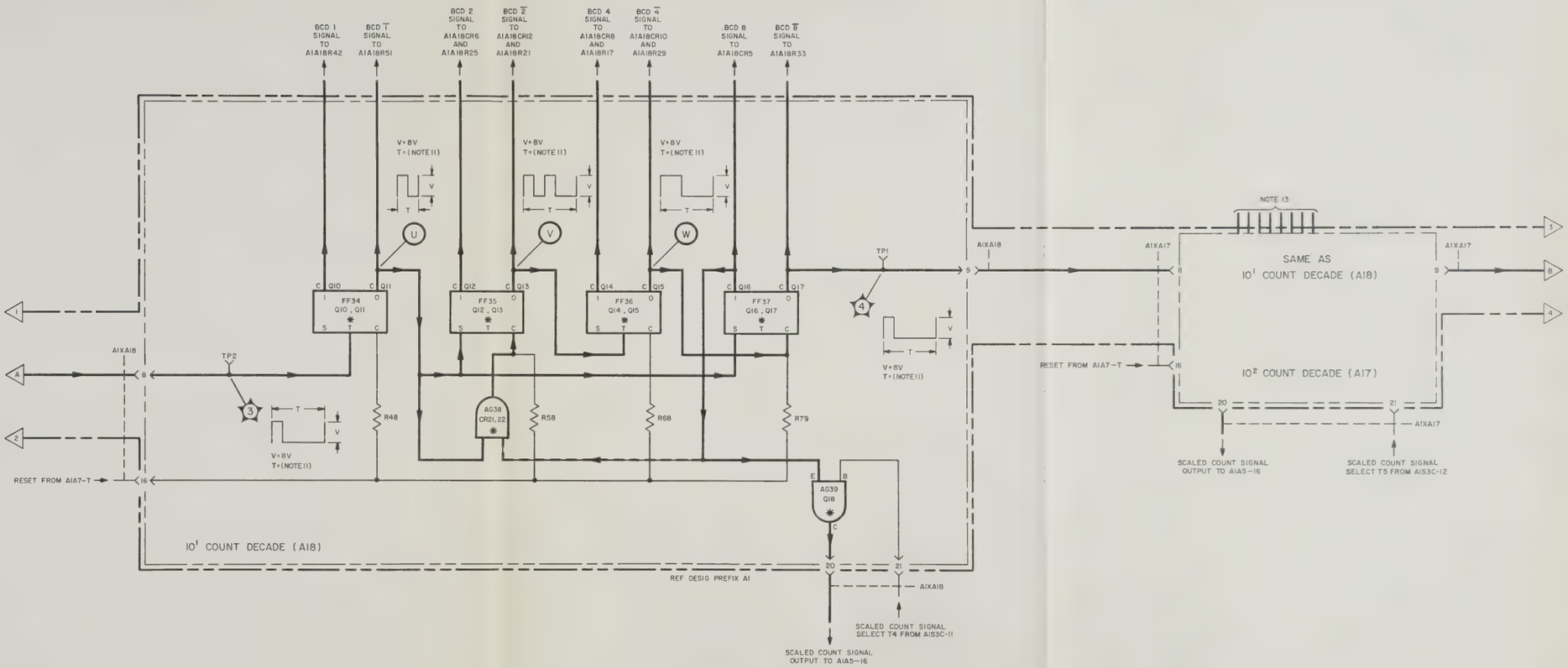

Figure 4-24. Count Decade, Functional and Servicing Block Diagram (Sheet 2 of 3)

Figure 4-24. Count Decade, Functional and Servicing Block Diagram (Sheet 2 of 3)

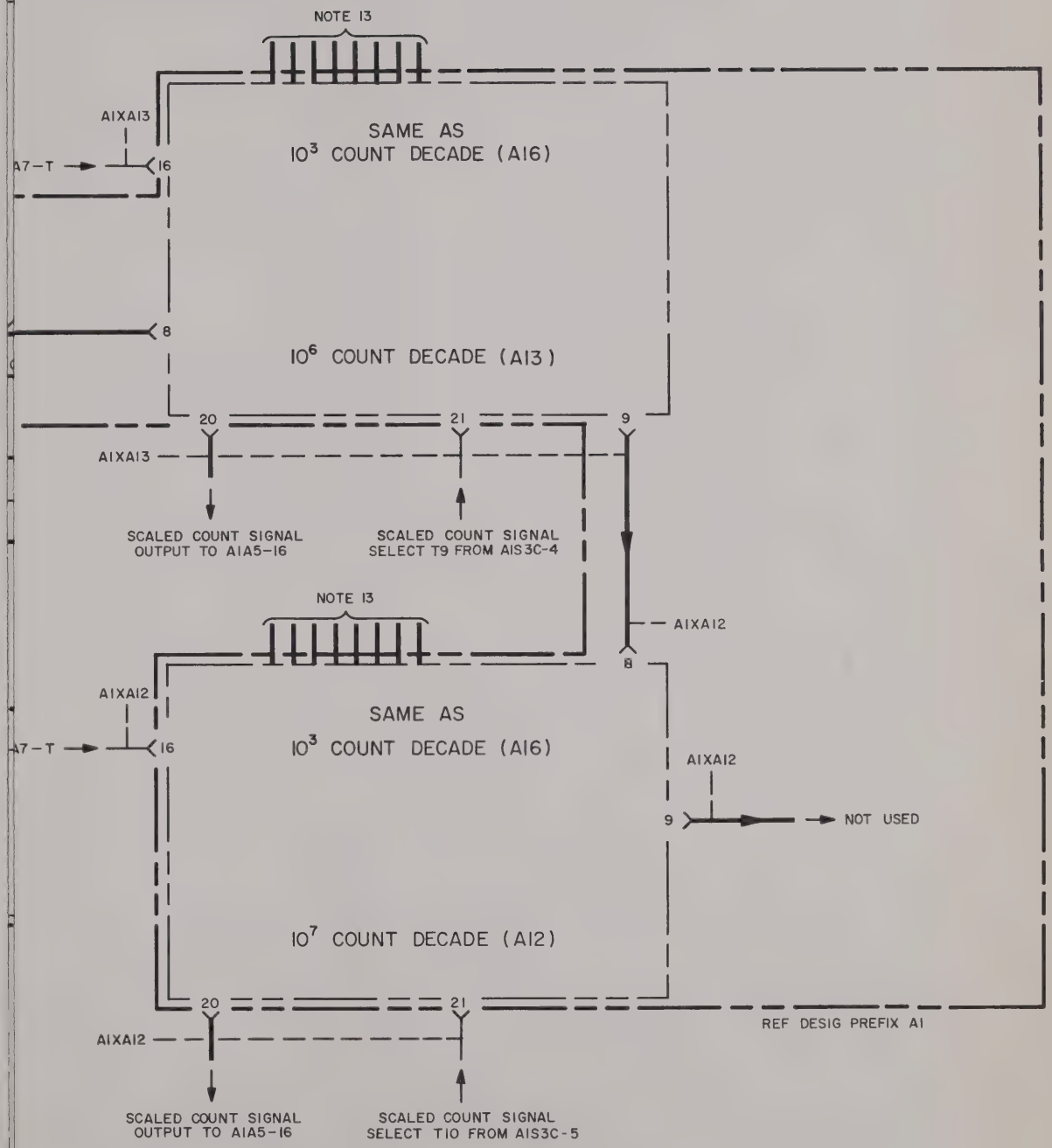

Figure 4-24. Count Decade, Functional and Servicing Block Diagram (Sheet 3 of 3)

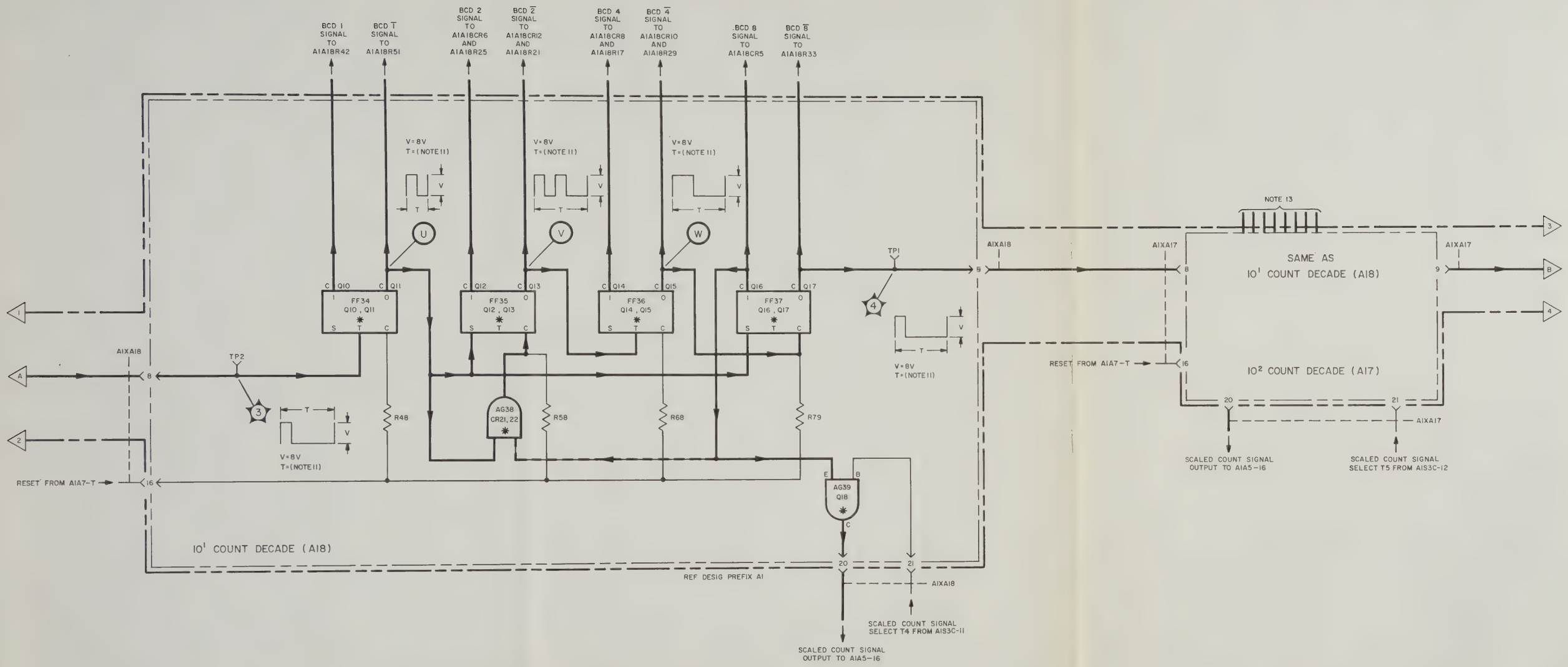
BCD 1 SIGNAL TO A1A18R42
BCD $\overline{1}$ SIGNAL TO A1A18R51
BCD 2 SIGNAL TO A1A18CR6 AND A1A18R25
BCD $\overline{2}$ SIGNAL TO A1A18CR12 AND A1A18R21
BCD 4 SIGNAL TO A1A18CR8 AND A1A18R17
BCD $\overline{4}$ SIGNAL TO A1A18CR10 AND A1A18R29
BCD 8 SIGNAL TO A1A18CR5
BCD $\overline{8}$ SIGNAL TO A1A18R33
V=8V T=(NOTE 11)
FF34 Q10, Q11
FF35 Q12, Q13
FF36 Q14, Q15
FF37 Q16, Q17
AG38 CR21, 22
AG39 Q18
R48
R58
R68
R79
TP1
TP2
U
V
W
A1XA18
A1XA17
RESET FROM A1A7-T
NOTE 13
SAME AS 10¹ COUNT DECADE (A18)
10² COUNT DECADE (A17)
10¹ COUNT DECADE (A18)
REF DESIG PREFIX A1
SCALED COUNT SIGNAL OUTPUT TO A1A5-16
SCALED COUNT SIGNAL SELECT T5 FROM A1S3C-12
SCALED COUNT SIGNAL SELECT T4 FROM A1S3C-11
SCALED COUNT SIGNAL OUTPUT TO A1A5-16

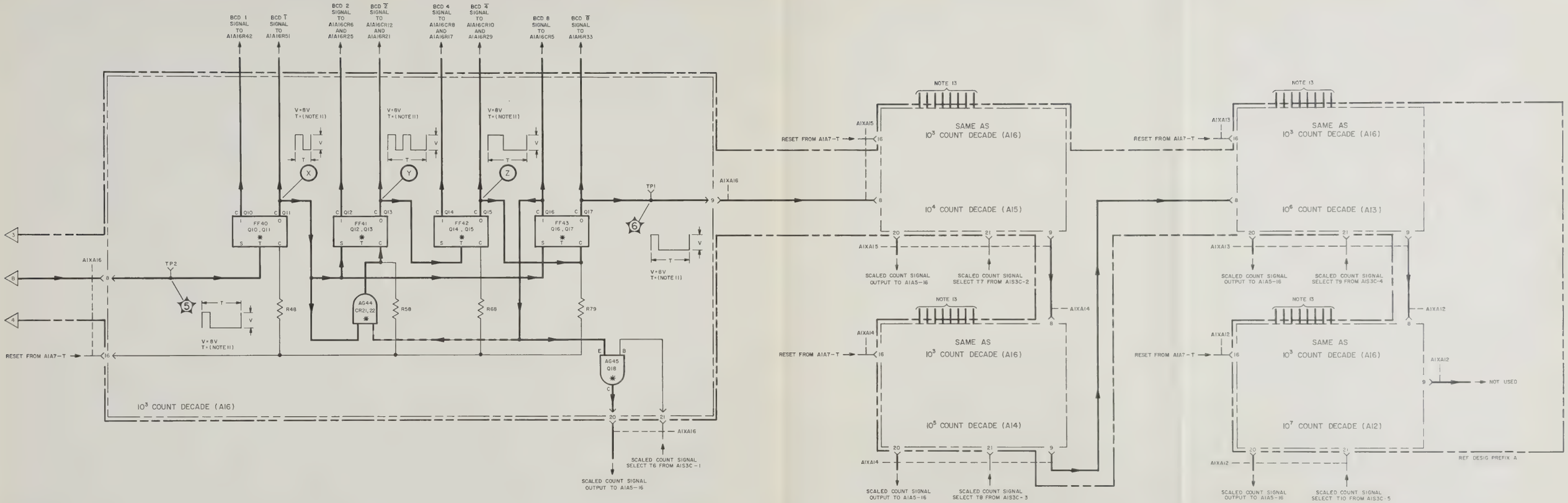

Figure 4-24. Count Decade, Functional and Servicing Block Diagram (Sheet 3 of 3)

4-15. READOUT.

a. READOUT FUNCTIONAL DESCRIPTION. — The readout functional section is constructed on portions of printed circuit boards A1A12 through A1A19 and A1A7. A readout indicator tube and circuits for its operation are mounted on printed circuit boards A1A12 through A1A19. The circuits for the coding of decimal point position information for the printer output are constructed on printed circuit board A1A7. Figure 4-29 shows the readout circuits and the decimal point coding circuits of one of the eight printed circuit boards, A1A12; the others are identical to A1A12 and are not shown separately.

The readout section decodes the binary-coded-decimal information obtained from the count decades into decimal information, and displays this information on the readout indicator tube. The readout also stores the information displayed on the readout indicator when the counter is operated in the store mode.

The readout indicator tube is a cold-cathode, gas-filled indicator consisting of two anodes, and five pairs of cathodes. Each cathode consists of two decimal indicators: 0-1, 2-3, 4-5, 6-7, and 8-9. The two anodes are termed odd or even. Igniting any particular number requires a voltage between one of the two anodes and one of the five cathode pairs. The circuits which drive the readout indicator can be divided into two parts: the anode selection and the cathode selection.

The reference designations used in the following description are not prefixed by assembly designations. The descriptions apply to any of assemblies A1A12 through A1A19.

The circuits that select the appropriate annode consist of FF3, SW1 and SW2. When the counter is operated in the track mode, the flip-flop is driven directly by the "1" flip-flop on the associated count decade, and reverses its state each time the count advances by one number. The flip-flop is in one state (Q3 conducting) for even numbers and in the opposite state (Q4 conducting) for odd numbers. The outputs of FF3 are used to drive SW1 and SW2. These two switches are in shunt across the readout indicator. When an even number is to be displayed, Q1 (SW1) cuts off and Q2 (SW2) saturates, causing the voltage at the even anode to rise and at the odd anode to fall. When an odd number is to be displayed, the reverse occurs. To complete the ionization of the readout indicator the voltage at one cathode must be lowered until the ignition voltage between anode and cathode is reached.

The circuits that select the appropriate cathode consist of five silicon-controlled switches (SW6 through SW10). The input to each switch is an AND gate. The inputs to the AND gates are taken from the "2", "4", and "8" flip-flops on the associated count decade. One additional input is supplied by the transfer pulse for store operation. When all inputs to any AND gate are positive and the counter is in the track mode, the AND gate produces a positive output causing the silicon-controlled switch to conduct. This conducting switch lowers the cathode voltage to the point where the readout indicator ignites. Table 4-15 shows the inputs necessary to activate each AND gate.

TABLE 4-15. READOUT DIGITS DECODING

AND GATE	CATHODE	POSITIVE INPUTS NECESSARY TO ACTIVATE AND GATE
AG11	0, 1	2, 4, 8, and transfer pulse
AG12	2, 3	$\overline{2}$, 4, and transfer pulse
AG13	4, 5	2, $\overline{4}$, and transfer pulse
AG14	6, 7	$\overline{2}$, $\overline{4}$, and transfer pulse
AG15	8, 9	$\overline{8}$, and transfer pulse

When the counter is in the TRACK mode of operation, the transfer pulse input to the AND gates is held at approximately +12 volts. This allows the gates to be activated entirely by the count-decade flip-flops. The clear-set signal supplied to the silicon-controlled switch is held at approximately zero volts; this allows the switch to conduct when the AND gate is activated and to cut off when it is not. In this mode of operation the number displayed changes each time the count changes in the count decades.

The silicon-controlled switches are also used as the storage elements when the counter is operated in the store mode. In this mode of operation the positive clear-set voltage keeps the silicon-controlled switch in conduction after the AND gate is no longer activated. This causes the number displayed to remain illuminated even though the number in the count decade changes. When the clear-set voltage is removed the silicon controlled switch cuts off. To turn on the switch the AND gate must be reactivated. In the store mode this requires the presence of the transfer signal as well as the proper inputs from the count decades. Thus, the AND gate turns on the silicon-controlled switch, application of the clear-set signal holds it on, and removal of clear set turns it off. Figure 4-25 shows the relationship between the clear set and transfer signals during store and track operation.

The remainder of the readout section consists of the decimal point and unit lamp system and decimal lamp position coding. All the lamps are controlled by the front panel FUNCTION and time-base switches. Table 4-16 shows which lamp light in each position of the FUNCTION and time-base switches.

The decimal lamp coding system is constructed on part of printed circuit board A1A7. The seven decimal-point lamp positions on the readout are assigned the numbers D0 through D6 with D0 being at the far right when the counter is viewed from the front. The position number of the lamp that is lighted is coded into binary-coded-decimal form and terminated at the PRINTER connector. Since there is no term requiring a binary-coded-decimal 8, this term is always at the +12-volt level.

b. READOUT TROUBLE SHOOTING. — Problems in the readout section fall into five categories:

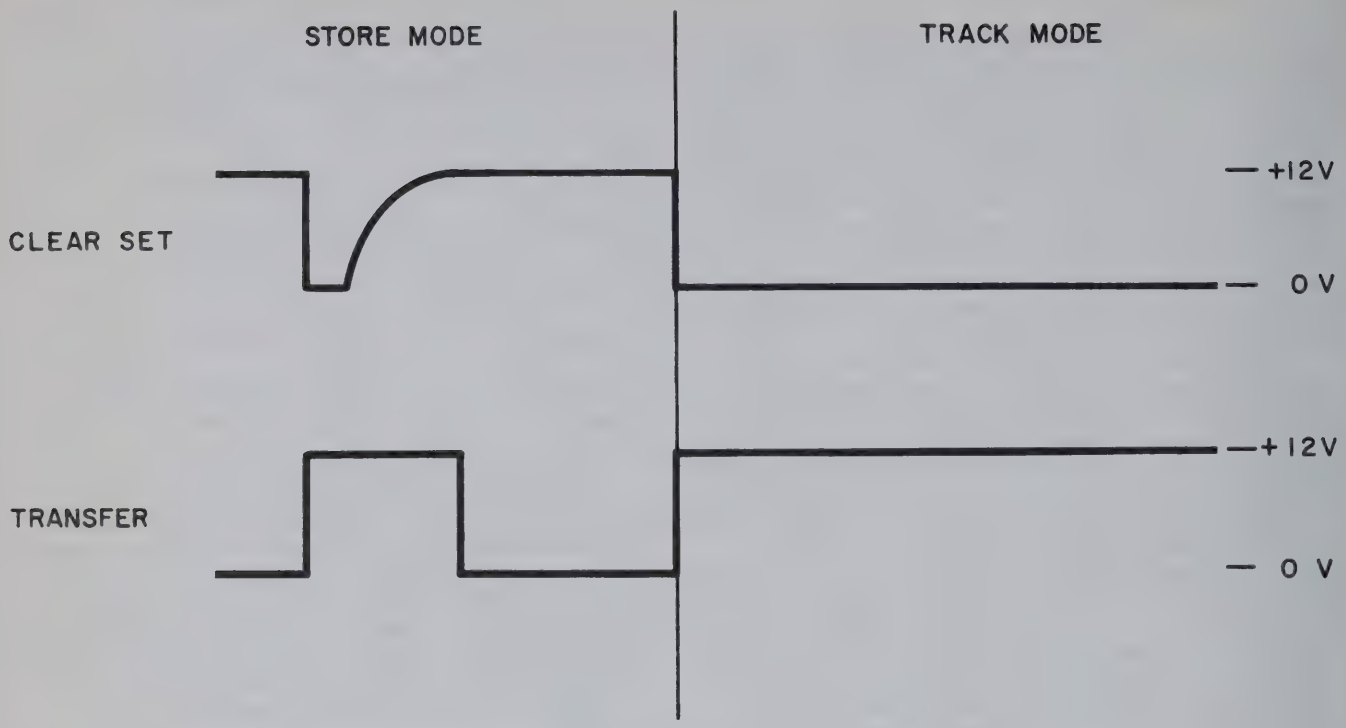

Figure 4-25. Store and Track Mode Readout Waveforms

TABLE 4-16. ANNUNCIATOR LAMP ILLUMINATION

FUNCTION SWITCH POSITION	TIME BASE SWITCH POSITION									
	10^{-1}	1	10^{1}	10^{2}	10^{3}	10^{4}	10^{5}	10^{6}	10^{7}	10^{8}
PERIOD B x 1		sec, D0	sec, D1	sec, D2	ms, D0	ms, D1	ms, D2	ms, D0	ms, D1	D0
PERIOD B x 10		sec, D1	sec, D2	ms, D0	ms, D1	ms, D2	ms, D0	ms, D1	ms, D2	D1
PERIOD B x 10^2			ms, D0	ms, D1	ms, D2	ms, D0	ms, D1	ms, D2	ms, D3	D2
PERIOD B x 10^3				ms, D2	ms, D0	ms, D1	ms, D2	ms, D3	ms, D4	D3
PERIOD B x 10^4					ms, D1	ms, D2	ms, D3	ms, D4	ms, D5	D4
PERIOD B x 10^5						ms, D3	ms, D4	ms, D5	ms, D6	D5
TIME B → C		sec, D0	sec, D1	sec, D2	ms, D0	ms, D1	ms, D2	ms, D0	ms, D1	
FREQ	kc, D4	kc, D3	kc, D2	kc, D1	kc, D0	mc, D2	mc, D1	mc, D0		
SCALE A										
MANUAL STOP										
MANUAL START										

(1) improper decoding od count decade signals; (2) improper memory operation; (3) improper numeral illumination; (4) faults in the readout indicator tubes; and (5) improper decimal-lamp position coding. Table 4-17 is the readout trouble-shooting chart.

If only odd or only even numbers are displayed on the readout indicator, check FF3 and associated switches SW1 and SW2. The flip-flop is driven through R51 and R42 from the collectors on the "1" flip-flops of the associated count decade. The collectors of Q3 and Q4 drive the switch transistors Q1 and Q2. If any of these four transistors is open or shorted, the readout may display only odd or only even numbers.

Figure 4-26 is useful in trouble shooting problems resulting in absence of ignition voltage at any numeral.

In figure 4-26, the only situation which allows the voltage between the anode and cathode to reach the ignition voltage occurs when the silicon-controlled switch is conducting and the transistor is cutoff. If this situation is found to exist and the readout indicator is not ionized, check the tube.

A partial schematic diagram of one of the silicon-controlled switches and associated AND gate is shown in figure 4-27. This diagram is useful in trouble shooting the decoding portion of the readout section.

In figure 4-27, positive levels at all inputs produce a positive voltage at the AND gate output. When this occurs, turn-on current is supplied to the silicon-controlled switch through the AND gate resistor. This causes the silicon-controlled switch to saturate and the anode gate is at the cathode bias voltage. If the voltage at the anode is made positive, the switch remains saturated when the inputs to the AND gate are removed. If two numbers corresponding to a single cathode do not light, the silicon-controlled switch driving them is probably open. If more than one number lights at a time, check the parts making up the AND gate associated with those numbers.

A partial schematic diagram of the coding of one decimal point lamp (D4) is shown in figure 4-28. When the switch is closed the lamp lights and the input to the OR gate is grounded. The output of the OR gate is zero volts and the binary-coded-decimal output is 4, corresponding to lamp D4 being lighted. The other lamps are coded in an identical manner.

Table 4-17 is the readout trouble-shooting chart.

c. USEFUL ILLUSTRATIONS. — Illustrations useful in maintaining this functional section are: figures 4-25, 4-26, 4-27, 4-28, 4-29, 5-42, 5-47, 5-48, 5-49, 5-77, and 5-78.

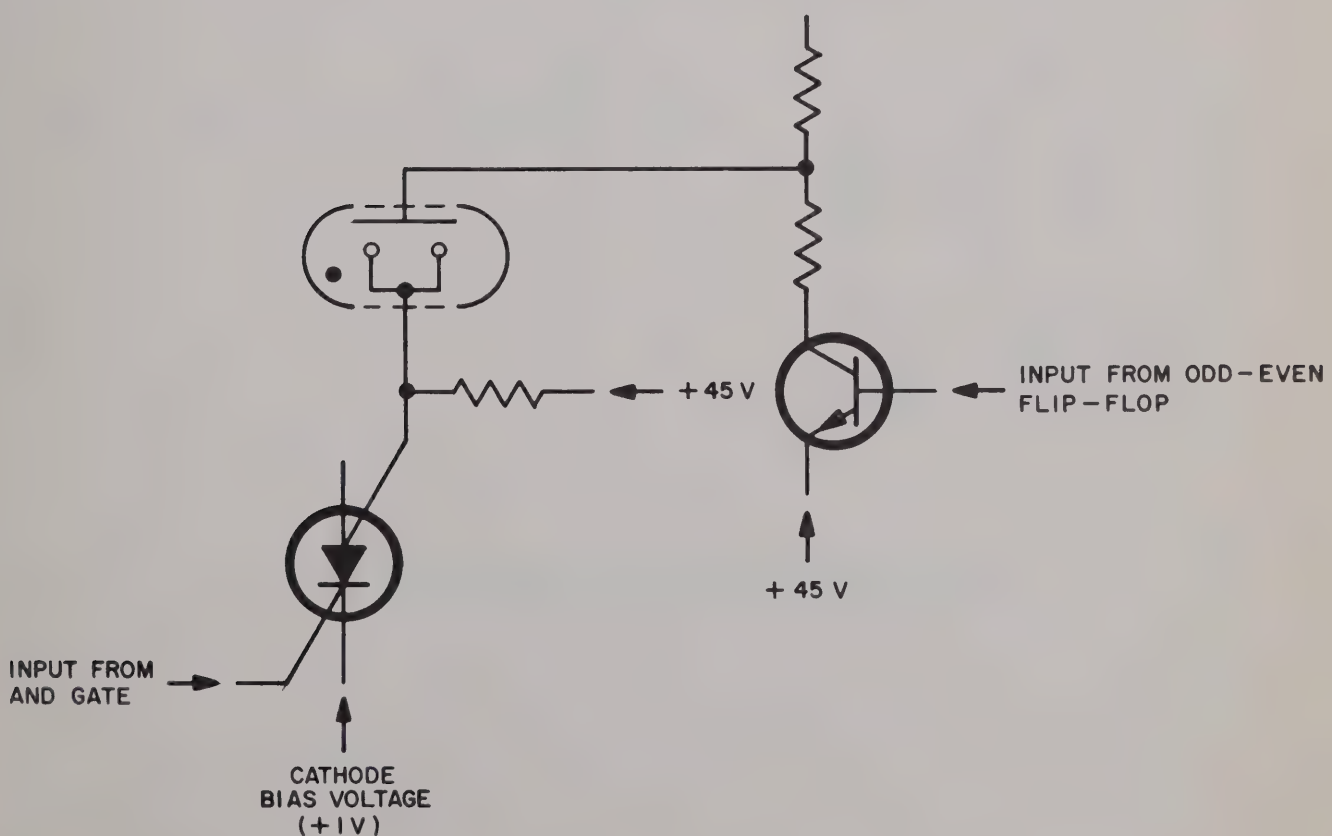

Figure 4-26. Typical Readout Indicator Driver, Simplified Schematic Diagram

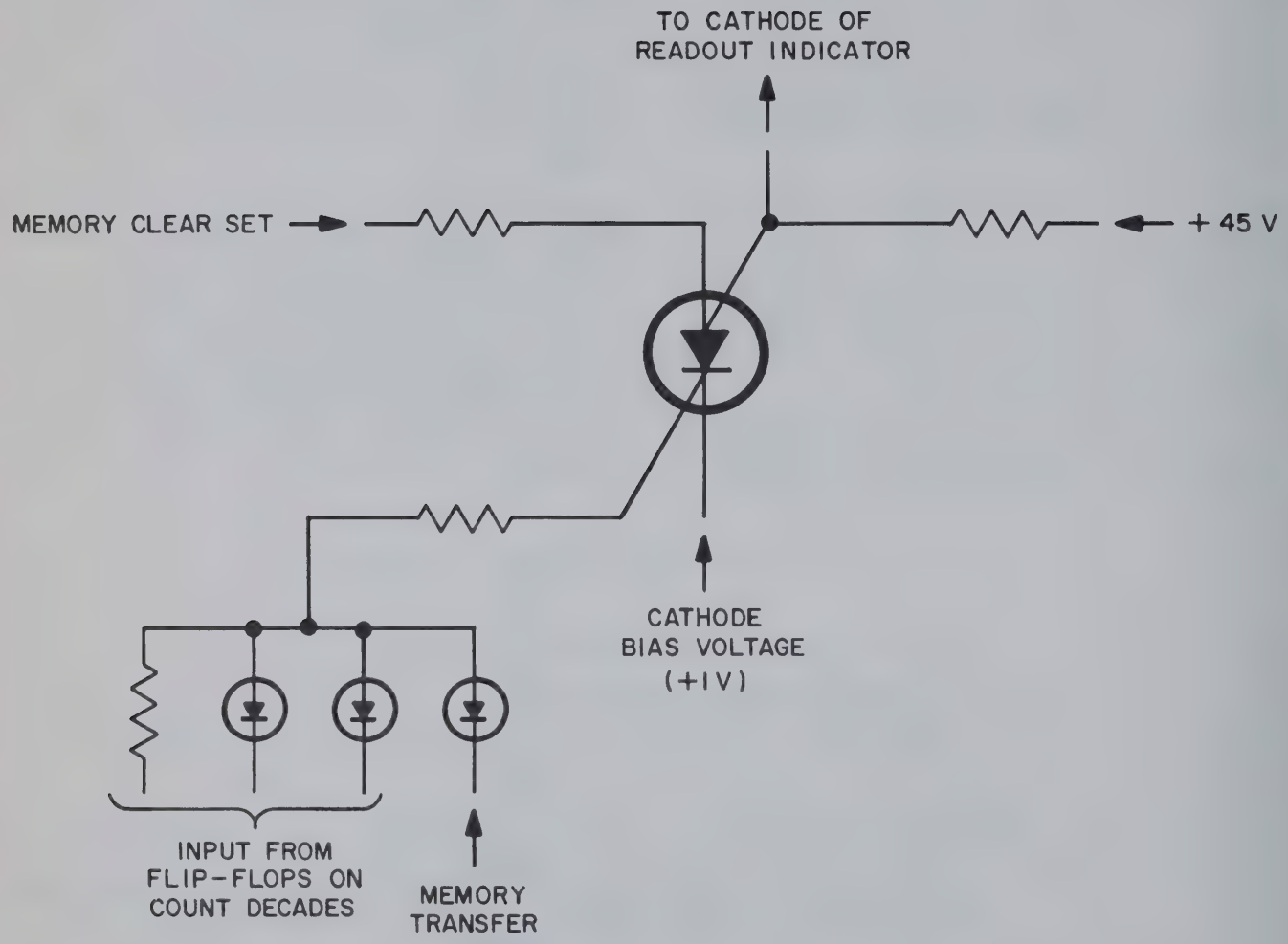

Figure 4-27. Typical Readout Decoding, Simplified Schematic Diagram

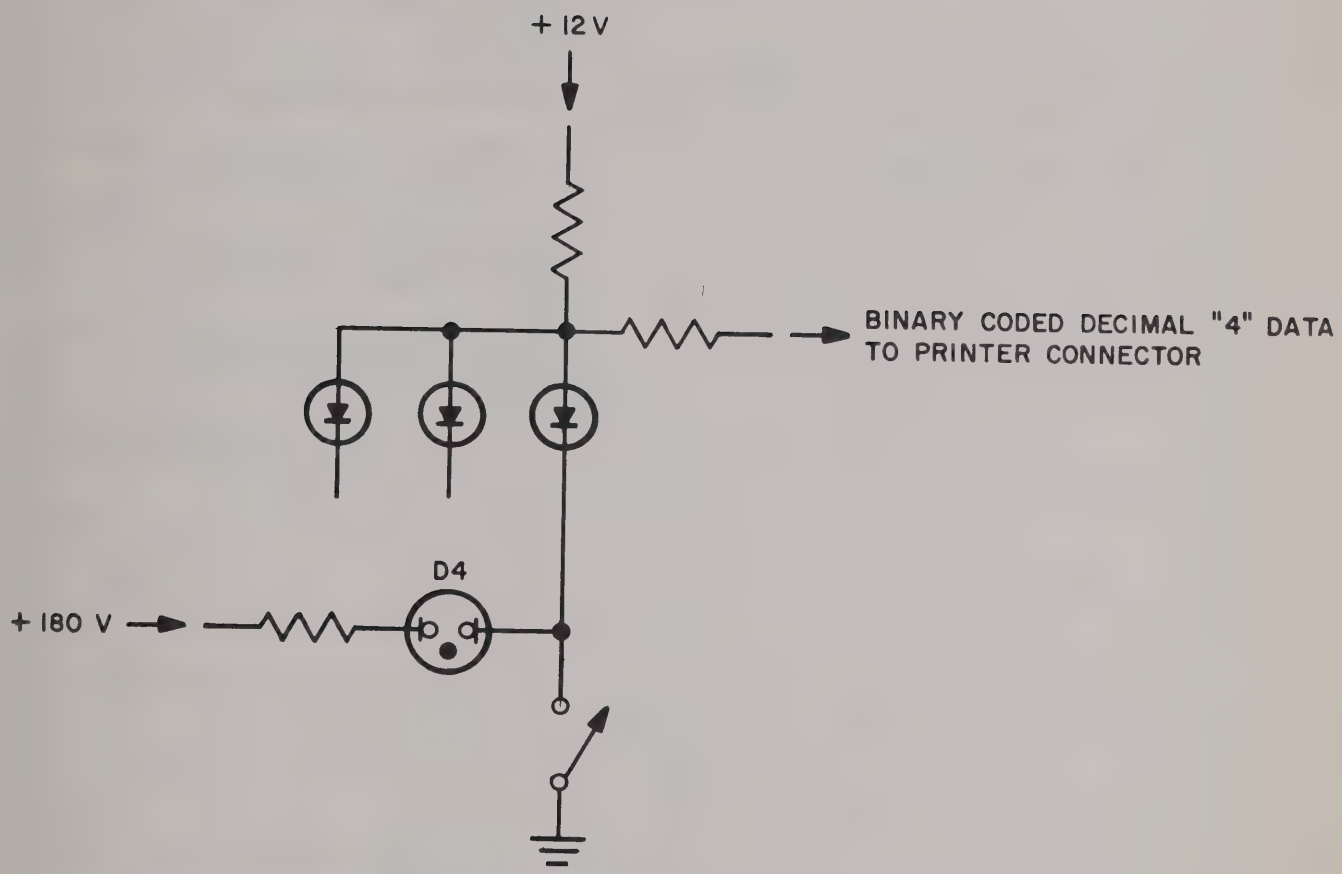

Figure 4-28. Typical Decimal Point Lamp Coding,
Simplified Schematic Diagram

TABLE 4-17. READOUT TROUBLE SHOOTING

STEP	ACTION	RESULTS	NEXT STEP
		Note Prefix all reference designations in this column by the applicable assembly number.	
1	Set the controls on the front panel of the counter as follows: POWER switch to TRACK. FUNCTION switch to TIME B→C. Mode selector switch to SEP. Press RESET switch. Turn B TRIGGER VOLTS control slowly in either direction until the GATE lamp goes on. Rotate timebase switch until faulty digital display indicator advances once each second.	Readout counts in the proper sequence of 0 through 9.	2
		If readout displays only even or only odd numbers, check Q1 through Q4.	
		If readout displays five single numbers and five double numbers, check Q1 through Q4, CR1 and CR2.	
		If readout becomes blurred during part of count sequence, check CR7, CR9, CR11, and CR13.	
		If readout displays double numbers with the exception of a single 8 or 9, check CR14.	
		If readout advances while either 0 or 1 is on all the time, check Q5.	
		If readout advances while either 2 or 3 is on all the time, check Q6.	
		If readout advances while either 4 or 5 is on all the time, check Q7.	
		If readout advances while either 6 or 7 is on all the time, check Q8.	
		If readout advances while either 8 or 9 is on all the time, check Q9.	
		If readout advances but 0 and 1 are blurred, check Q6.	
		If readout advances but 4 and 5 are blurred, check Q7.	
		If readout advances but 6 and 7 are blurred, check Q8.	
		If readout advances but 8 and 9 are blurred, check Q9.	
		If readout advances but two consecutive numbers light at once, check Q1 through Q4.	
		If readout advances in an improper sequence, check CR5, CR6, CR8, CR10, and CR12.	
		If readout displays random double numbers, check CR5, CR6, CR8, CR10, and CR12.	

TABLE 4-17. (Continued)

STEP	ACTION	RESULTS	NEXT STEP
1 (cont)		If readout blinks on and off, check cathode bias voltage (correct voltage is approximately +1 volt).	
2	Set the controls on the front panel of the counter as follows: POWER switch to TRACK. FUNCTION switch to FREQ. SENSITIVITY switch to . 1 V. Time-base switch to 1. Apply a signal to the FREQ. A connector with a frequency which causes faulty digital display indicator to advance approximately once each second. Set POWER switch to STORE. Vary frequency of input signals to cause the faulty digital display indicator to store as many different numbers as possible.	Readout stores every number properly.	3
		If readout becomes blurred when 0 or 1 should be stored, check R19 and Q5.	
		If readout becomes blurred when 2 or 3 should be stored, check R23 and Q6.	
		If readout becomes blurred when 4 or 5 should be stored, check R27 and Q7.	
		If readout becomes blurred when 6 or 7 should be stored, check R31 and Q8.	
		If readout becomes blurred when 8 or 9 should be stored, check R35 and Q9.	
		If 0 or 1 light along with number being stored, check CR7.	
		If 2 or 3 light along with number being stored, check CR9.	
		If 4 or 5 light along with number being stored, check CR11.	
		If 6 or 7 light along with number being stored, check CR13.	
		If 8 or 9 light along with number being stored, check CR14.	
3	Monitor binary-coded-decimal output of the following pins on PRINTER connector, (TRUE output is normally more negative than +0. 5 volts, FALSE is more positive than +11. 5 volts): BCD 1 pin 9 BCD 2 pin c BCD 4 pin b BCD 8 pin x Vary positions of FUNCTION and time-base switches to change position of decimal point light and check lamp coding.	If BCD 1 coding is incorrect, check A1A7CR12, A1A7CR13, and A1A7CR14.	
		If BCD 2 coding is incorrect, check A1A7CR15, A1A7CR16, and A1A7CR17.	
		If BCD 4 coding is incorrect, check A1A7CR18, A1A7CR19, and A1A7CR20.	
		If BCD 8 coding is not always FALSE (about +12 volts), check A1A7R49.	
		If all BCD outputs remain at zero volt, check power supply.	

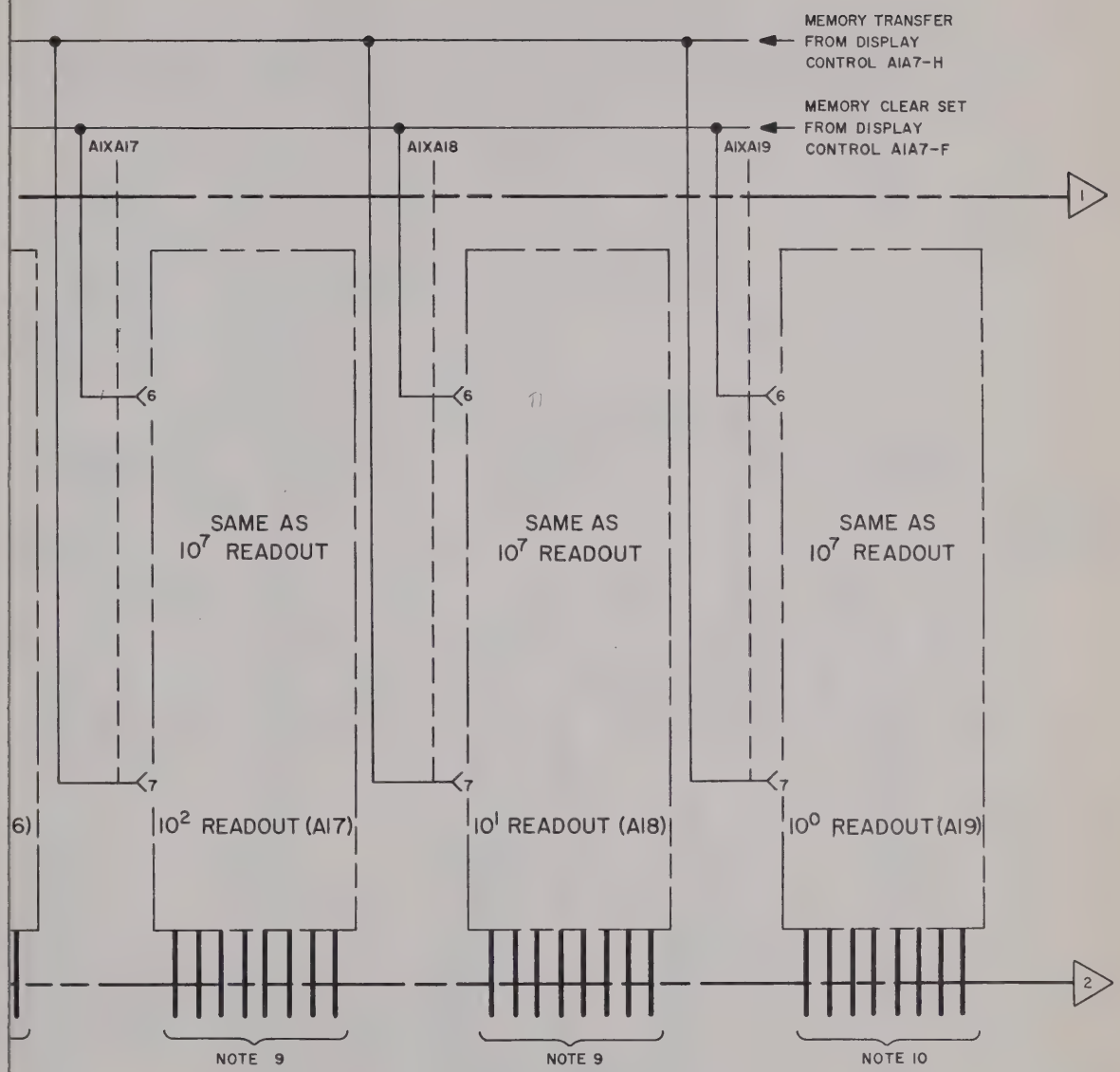

Figure 4-29. Readout, Functional and Servicing Block Diagram (Sheet 1 of 2)

NOTES

1. Primary signal paths weighted.
2. ——— — — — indicates assembly boundaries.
3. Dc voltages are preceded by "+" or "–".
4. Dc voltages are measured with a CCUH-801 Dc Differential Voltmeter.
5. Abbreviations within logic or circuit blocks are as follows:

   AG AND Gate
   FF Flip-Flop
   SW Switch

   Identification within logic blocks is as follows: The first line identifies the logic function symbol on the drawing. The symbols are numbered in general data flow sequence. The second line identifies the major parts associated with the logic function. The third line identifies the assembly containing the logic function.
6. Letters and numbers outside of some logic or circuit blocks indicate transistor elements.
7. Readout circuits of assemblies A1A12 through A1A19 are identical. Only A1A19 is shown in detail.
8. Operating control settings:

   POWER switch to TRACK.
   FUNCTION switch to TIME B ⟶ C.
   Mode selector switch to SEP.
9. To corresponding parts on count decade portion of same assembly.
10. To corresponding parts on count decade portion of assembly A1A19.

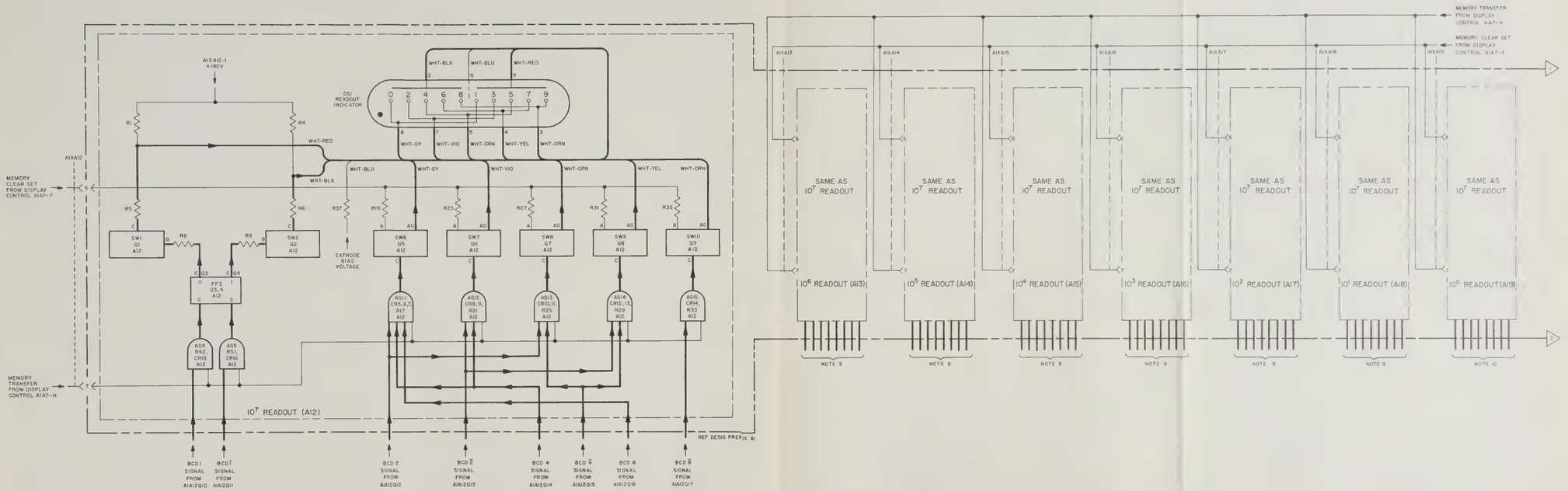

Figure 4-29. Readout, Functional and Servicing Block Diagram (Sheet 1 of 2)

NOTES

1. Primary signal paths weighted.
2. ——— — — ——— indicates assembly boundaries.
3. Dc voltages are preceded by "+" or "−".
4. Dc voltages are measured with a CCUH-801 Dc Differential Voltmeter.
5. Abbreviations within logic or circuit blocks are as follows:

   AG AND Gate
   FF Flip-Flop
   SW Switch

   Identification within logic blocks is as follows: The first line identifies the logic function symbol on the drawing. The symbols are numbered in general data flow sequence. The second line identifies the major parts associated with the logic function. The third line identifies the assembly containing the logic function.
6. Letters and numbers outside of some logic or circuit blocks indicate transistor elements.
7. Readout circuits of assemblies A1A12 through A1A19 are identical. Only A1A19 is shown in detail.
8. Operating control settings:

   POWER switch to TRACK.
   FUNCTION switch to TIME B→C.
   Mode selector switch to SEP.
9. To corresponding parts on count decade portion of same assembly.
10. To corresponding parts on count decade portion of assembly A1A19.

Figure 4-29. Readout, Functional and Servicing Block Diagram (Sheet 1 of 2)

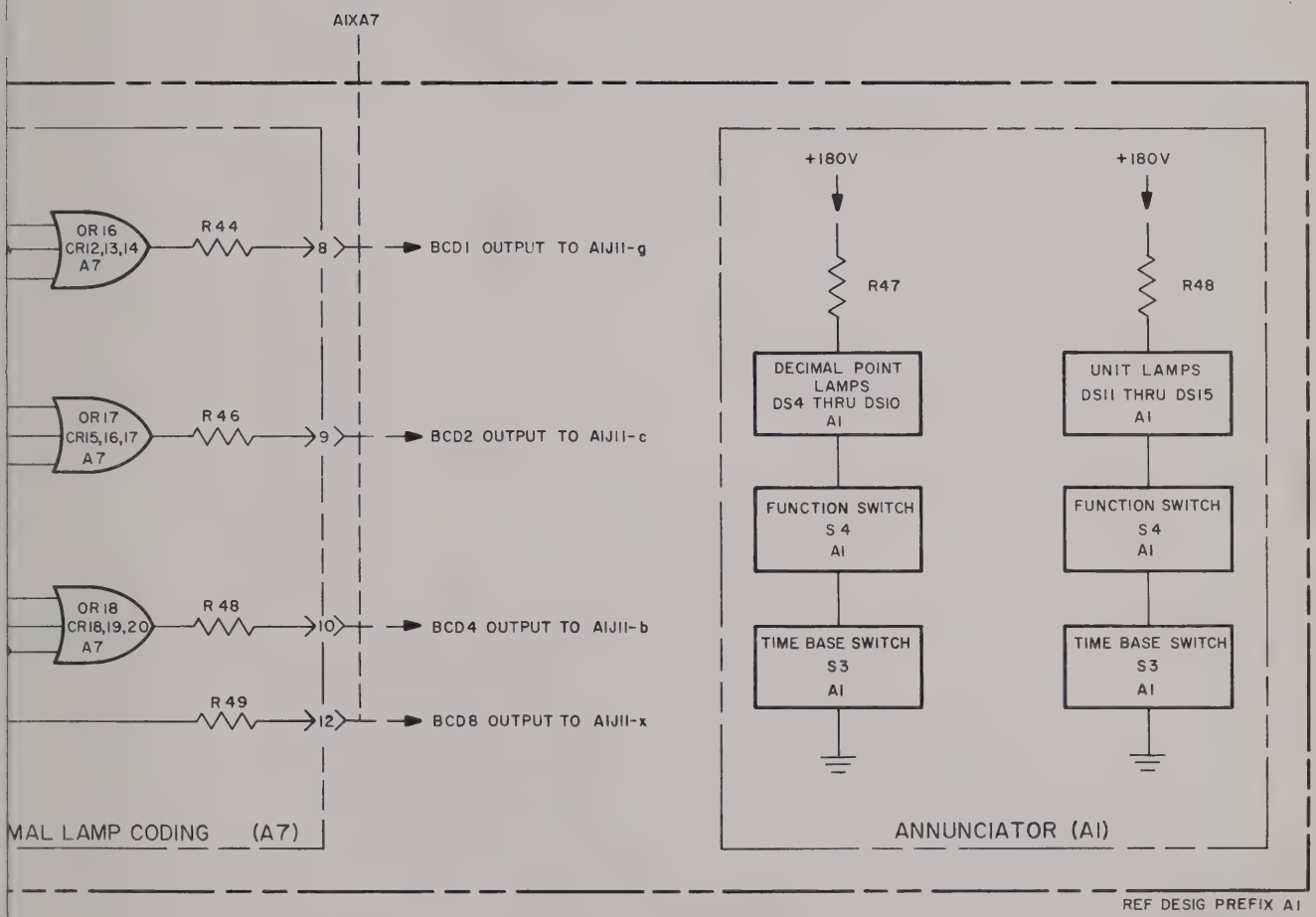

Figure 4-29. Readout, Functional and Servicing Block Diagram (Sheet 2 of 2)

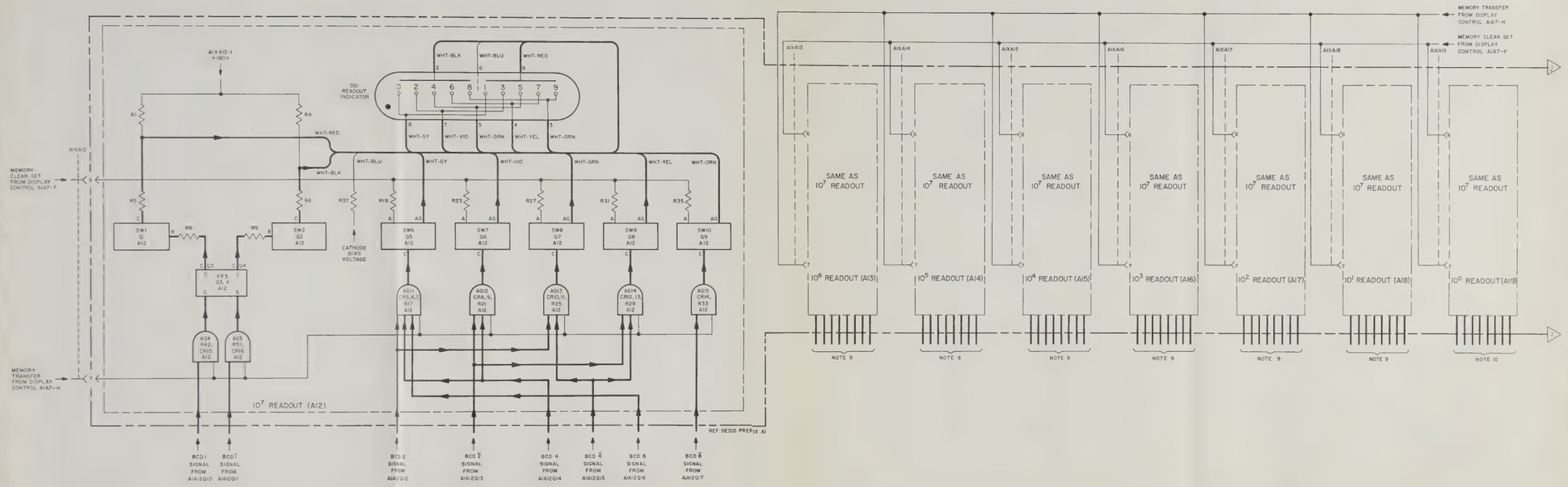

NOTES

1. Primary signal paths weighted.
2. ——— — — — indicates assembly boundaries.
3. Dc voltages are preceded by "+" or "–".
4. Dc voltages are measured with a CCUH-801 Dc Differential Voltmeter.
5. Abbreviations within logic or circuit blocks are as follows

   AG AND Gate
   FF Flip-Flop
   SW Switch

   Identification within logic blocks is as follows: The first line identifies the logic function symbol on the drawing. The symbols are numbered in general data flow sequence. The second line identifies the major parts associated with the logic function. The third line identifies the assembly containing the logic function.
6. Letters and numbers outside of some logic or circuit blocks indicate transistor elements.
7. Readout circuits of assemblies A1A12 through A1A19 are identical Only A1A19 is shown in detail.
8. Operating control settings:

   POWER switch to TRACK.
   FUNCTION switch to TIME B⟶C.
   Mode selector switch to SEP.
9. To corresponding parts on count decade portion of same assembly
10. To corresponding parts on count decade portion of assembly A1A19.

Figure 4-29. Readout, Functional and Servicing Block Diagram (Sheet 1 of 2)

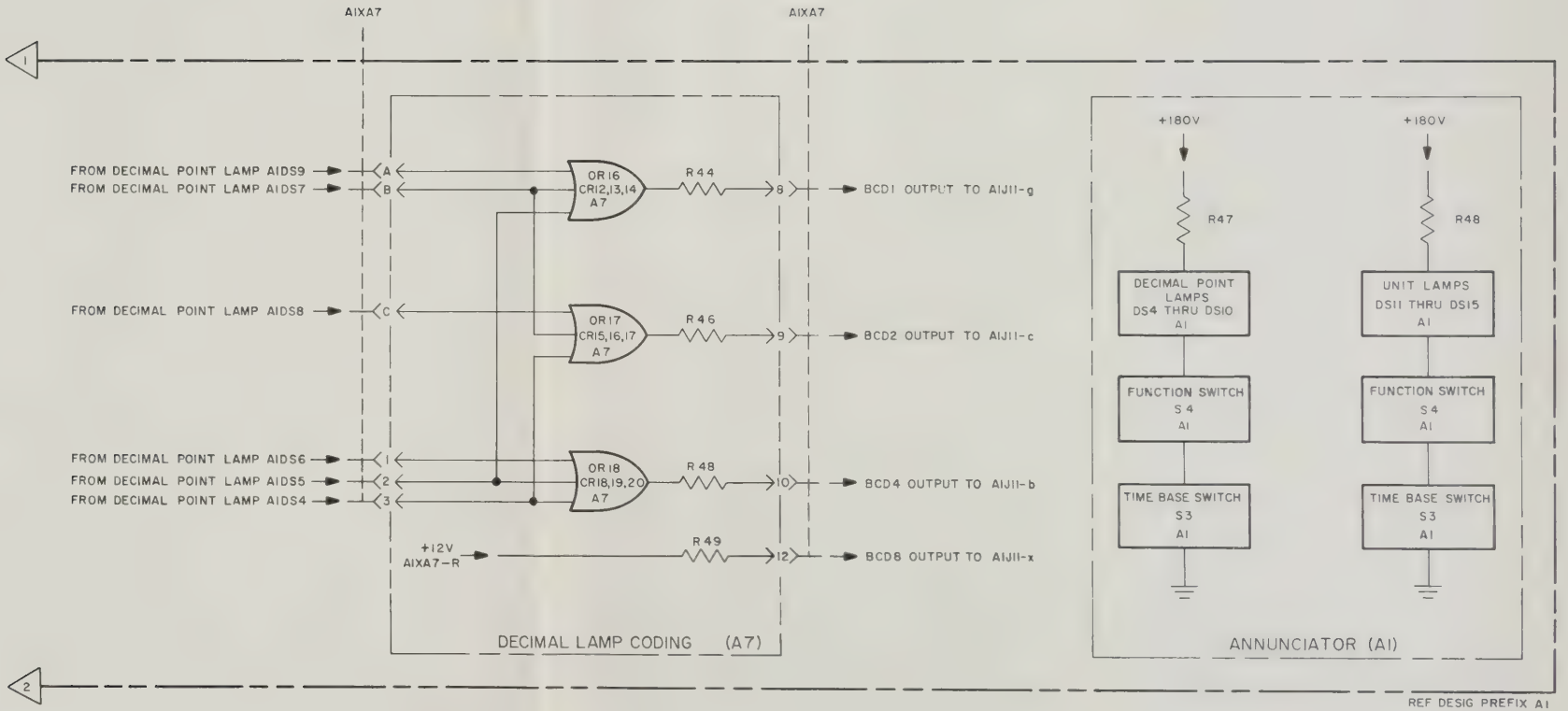

Figure 4-29. Readout, Functional and Servicing Block Diagram (Sheet 2 of 2)

4-16. POWER SUPPLY.

a. POWER SUPPLY FUNCTIONAL DESCRIPTION. — The power supply functional section consists of seven dc supplies. Five of these supplies (+18-volt, +12-volt, +6-volt, −6-volt, and −12-volt) are regulated and two (+180-volt and +45-volt) are unregulated. The majority of the power supply circuits is constructed on printed circuit board A1A1. The power transformer, four rectifier diodes, and eight filter capacitors are mounted on the main chassis. The regulator for the −6-volt supply is constructed on part of printed circuit board A1A10. Figure 4-30 shows the functional relationship of all circuits in the power supply.

The +12-volt regulated supply consists of rectifier A1CR1, A1CR2, regulator A1A1Q1, amplifier A1A1Q2, reference A1A1Q3, and associated circuits. Regulator A1A1Q1 acts as a variable impedance connected between the rectifier and the load, and regulates the load voltage around +12 volts. Regulation is controlled by reference A1A1Q3. It compares a sample of the load voltage against a fixed voltage supplied by diode A1A1CR14, and produces an error voltage proportional to the change in load voltage. This error voltage is amplified in amplifier A1A1Q2 and applied to the base of the regulator, changing the impedance of the regulator. The change in impedance is such that it returns the output voltage to its regulated value. The +12-volt regulated output serves as a stable reference for the other regulated supplies.

The +6-volt regulated supply consists of regulator A1A1Q5, reference A1A1Q4, and associated circuits. It receives its input from the +12-volt supply, and reduces it to +6 volts by dropping the remainder across regulator A1A1Q5. Regulation is controlled by reference A1A1Q4. It compares the load voltage against a portion of the fixed +12 volts, and produces an output proportional to the load voltage variation. This output changes the impedance of regulator A1A1Q5 accordingly, offsetting the initial change in load voltage.

The −12-volt regulated supply consists of rectifier A1CR2, A1CR4, constant current generator A1A1Q6, regulator A1A1Q7, reference A1A1Q8, and associated circuits. Operation of the −12-volt regulated supply is similar to the +12-volt regulated supply.

The −6-volt regulated supply consists of regulator A1A10Q3, voltage reference A1A10CR5, and associated circuits. It is similar in operation to the operation to the +6-volt regulated supply, and derives its output voltage from the −12-volt regulated supply.

The +18-volt regulated supply consists of rectifier A1A1CR9 through A1A1CR12 and associated circuits. It is essentially a +6-volt supply superimposed on +12 volts. The rectifier produces a potential difference of 6 volts, and its negative side is returned to +12 volts. Since the output is taken from the positive side of the rectifier, this output is 18 volts positive with respect to ground.

b. POWER SUPPLY TROUBLE SHOOTING. — Problems in the power supply function section fall into five categories: (1) no output; (2) high or low output; (3) output voltage does not remain constant as the line voltage is varied ±10% from 115 volts; and (4) a ripple level on the output that is greater than specified. Table 4-18 is a trouble-shooting chart for the power supply. The step-by-step trouble-shooting procedure given is based on the trouble-shooting techniques discussed below.

Since the regulator circuits are interdependent, the first step in trouble shooting is to determine which supply is faulty. Check the +12-volt supply first, since it serves as a reference for the other supplies. Next, check the −12-volt supply, −6-volt supply, +6-volt supply, and the +18-volt supply, in that order. First measure the dc output voltage of the regulator under test, then vary the line voltage ±10% while making the same measurement, to assure that the regulator operates properly with line voltage variations. Next measure the ripple level on the output of the regulator and then vary the line voltage ±10% while repeating the same measurement. These measurements identify the trouble symptom; the trouble can be further localized by following subsequent steps of the trouble-shooting chart.

To better understand the sympton of high-ripple level in the output voltage of a power supply regulator, consider that the complete circuits consist of the dc power source (rectifiers and filter), regulator circuit, and the load. The ripple level across the load is equal to the ripple level across the dc power source minus the ripple level across the series regulator. The ripple level across the series regulator is a function of the dc gain of the regulator amplifier. The ripple level across the dc power source is a function of the line voltage and the filter capacity that follows the rectifiers. An increase in ripple level can be caused by a loss of gain in the regulator amplifier (which would also cause a loss in dc regulation) by a loss of capacity in the input filter (which may not be accompanied by a loss of dc regulation), or by a large undesired increase in load current resulting from a short circuit. Ripple voltage measurement tests are included in the trouble-shooting chart, table 4-18.

c. USEFUL ILLUSTRATIONS. — Illustrations useful in maintaining this functional section are: figures 4-30, 5-38, 5-45, and 5-79.

TABLE 4-18. POWER SUPPLY TROUBLE SHOOTING

STEP	ACTION	RESULTS	NEXT STEP
		+180-VOLT SUPPLY	
1	Set POWER switch to TRACK. Measure dc voltage at test point 1.	Voltage is correct (+170 volts to +200 volts, except from +155 volts to +200 volts with A1A1 Model 22-524L6).	2
		If voltage is incorrect, check A1F1, A1F2, A1T1, A1A1CR1, and A1C2.	
2	Measure ac ripple voltage at test point 1.	Ripple voltage is 12 volts peak-to-peak or less except 9 volts peak-to-peak or less with A1A1 Model 22-524L6.	3
		If ripple voltage is greater, check A1C2.	
		+45-VOLT SUPPLY	
3	Measure dc voltage at test point 2.	Voltage is correct (+39.5 volts to 55.0 volts except up to +50.0 volts with A1A1 Model 22-524L6.	4
		If voltage is incorrect, check A1T1, A1A1CR5, A1A1CR6, A1A1CR7, A1A1CR8, and A1C3.	
4	Measure ac ripple voltage at test point 2.	Ripple voltage is 1.0 volt peak-to-peak or less.	5
		If ripple voltage is greater than 1.0 volt peak-to-peak, check A1C3.	
		+18-VOLT SUPPLY	
5	Measure dc voltage at test point 3.	Voltage is correct (+18 volts ±5%).	6
		If voltage is incorrect, check +12-volt supply, A1T1, A1A1CR9, A1A1CR10, A1A1CR11, A1A1CR12, and A1C4.	
6	Measure ac ripple voltage at test point 3.	Ripple voltage is 1.5 volt peak-to-peak or less.	7
		If ripple voltage is greater than 1.5 volt peak-to-peak, check A1C4.	
		+12-VOLT SUPPLY	
7	Measure dc voltage at test point 4.	Voltage is correct (+12 volts ±1%).	8
		If voltage is incorrect, check A1T1, A1CR1, A1CR3, A1A1Q1, A1A1Q2, A1A1Q3, A1A1Q5, A1A1CR13, A1A1CR14, A1C5, and A1C6.	
8	Measure ac ripple voltage at test point 4.	Ripple voltage is 40 millivolts peak-to-peak or less.	9
		If ripple voltage is greater than 40 millivolts peak-to-peak, check A1A1Q1, A1A1Q2, A1A1Q3, A1C5, A1C6, and A1A1C6.	

TABLE 4-18. (Continued)

STEP	ACTION	RESULTS	NEXT STEP
		+6-VOLT SUPPLY	
9	Measure dc voltage at test point 5.	Voltage is correct (+6 volts ±2%).	10
		If voltage is incorrect, check A1A1Q4, A1A1Q5, and A1C9.	
10	Measure ac ripple voltage at test point 5.	Ripple voltage is 20 millivolts peak-to-peak or less.	11
		If ripple voltage is greater than 20 millivolts peak-to-peak, check A1A1Q4, A1A1Q5, and A1C9.	
		-12-VOLT SUPPLY	
11	Measure dc voltage at test point 6.	Voltage is correct (-12 volts ±2%).	12
		If voltage is incorrect, check +12-volt supply, A1T1, A1CR2, A1CR4, A1A1Q6, A1A1Q7, A1A1Q8, A1A1CR15, A1A1CR16, A1C7, and A1C8.	
12	Measure ac ripple voltage at test point 6.	Ripple voltage is 40 millivolts peak-to-peak or less.	13
		If ripple voltage is greater than 40 millivolts peak-to-peak, check A1A1Q6, A1A1Q7, A1A1Q8, A1C7, and A1C8.	
		-6-VOLT SUPPLY	
13	Measure dc voltage at test point 7 (on A1A10).	Voltage is correct (-6 volts ±2%).	14
		If voltage is incorrect, check -12-volt supply, A1A10Q3, A1A10CR5, and A1A10C2.	
14	Measure ac ripple voltage at test point 7.	If ripple voltage is 40 millivolts or less, check loading on all supplies.	
		If ripple voltage is greater than 40 millivolts peak-to-peak, check A1C8, A1A10Q3, A1A10CR5, and A1A10C2.	

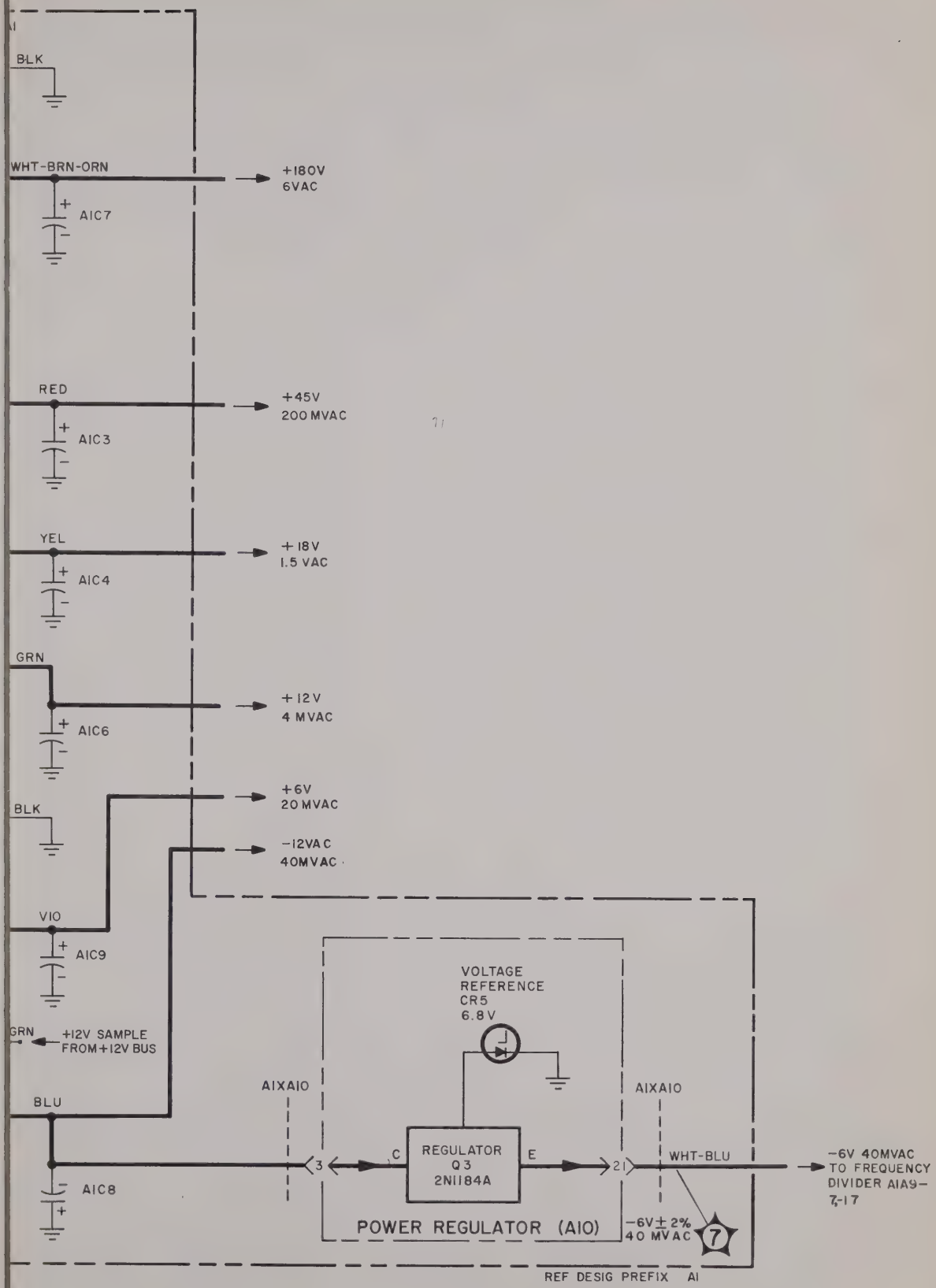

Figure 4-30. Power Supply, Functional and Servicing Block Diagram

NOTES

1. Primary signal paths weighted. Feedback paths weighted and dashed.
2. ——— — — ——— indicates assembly boundaries.
3. Names of panel controls and connectors are enclosed in boxes.
4. Dc voltages are preceded by "+" or "−"; ac ripple voltages are followed by VAC.
5. Dc voltages are measured with a CCUH-801 Dc Differential Voltmeter.
6. The letters CW, placed adjacent to the appropriate terminals of potentiometer A1AIR8 indicate the direction of rotation viewed from the shaft end.
7. Letters and numbers outside of some logic or circuit blocks indicate transistor elements.
8. Operating control setting:
   POWER switch to TRACK.

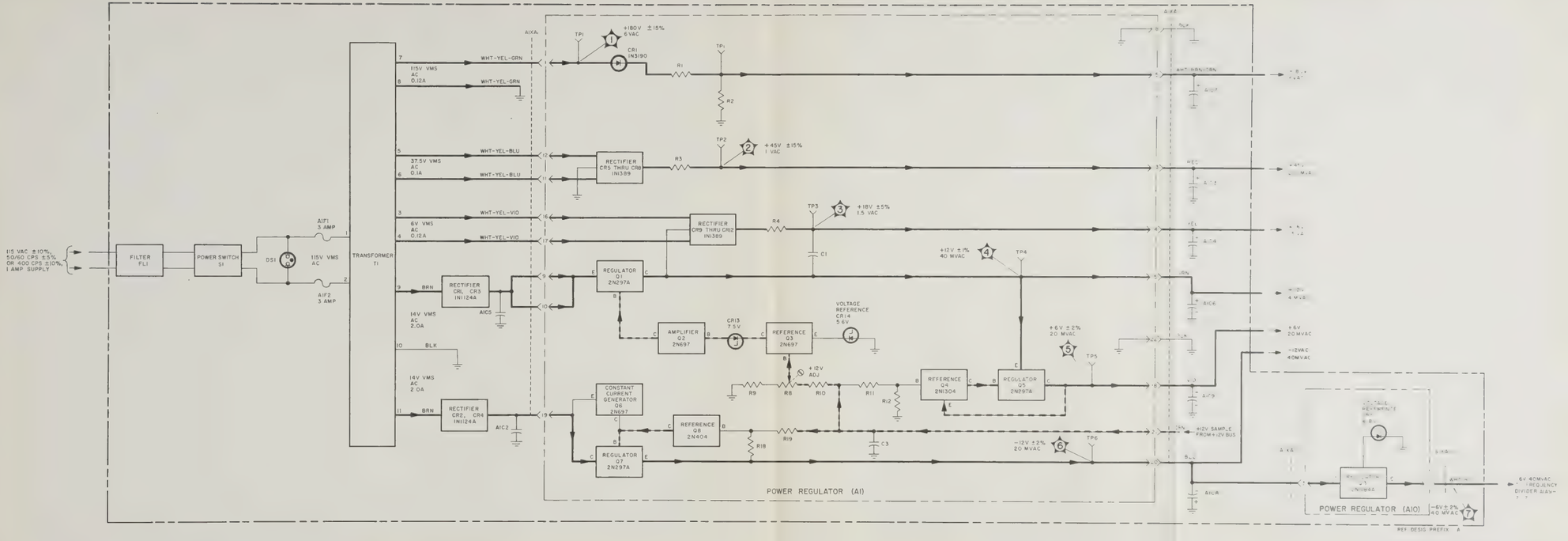

Figure 4-30. Power Supply, Functional and Servicing Block Diagram

SECTION 5

MAINTENANCE

5-1. FAILURE, AND PERFORMANCE AND OPERATIONAL REPORTS.

Note

The Bureau of Ships no longer requires the submission of failure reports for all equipments. Failure Reports and Performance and Operational Reports are to be accomplished for designated equipment (refer to Electronics Installation and Maintenance Book, NAVSHIPS 900,000) only to the extent required by existing directives. All failures shall be reported for those equipments requiring the use of Failure Reports.

5-2. PREVENTIVE MAINTENANCE.

Preventive maintenance consists mainly of cleaning the air filter and inspecting the interior of the counter.

Note

Screws mounted on the outside surfaces of the counter are differentiated by means of a color code; those normally removed prior to maintenance have the color of stainless steel; the others, which are not expected to be removed, are the same color as the instrument.

a. SERVICING THE AIR FILTER. — The air filter is located on the rear panel of the counter. Inspect the air filter bi-weekly and clean as often as necessary. Monthly cleaning is sufficient in normal operating environments; clean it more often when the instrument is used in extremely dusty environments. The procedure is as follows:

(1) Remove the two screws which secure the filter unit to the rear panel and remove the filter unit.

(2) Wash the filter unit in warm water and detergent, Specification MIL-D-16791C; then dry it thoroughly.

(3) Replace the filter unit and secure the two screws. Be sure that it is oriented so that the open sides of the louvers are at the bottom.

(4) Prepare and maintain a maintenance check-off list for the air filter, using the following format:

	AIR FILTER	
WEEK OF	CLEANING NOT REQUIRED	CLEANED

b. FAN MOTOR. — The fan motor is designed to operate without periodic lubrication.

c. VISUAL INSPECTION. — Inspect the interior of the counter each time it is serviced; more frequently when it is subjected to excessive physical shock or operated in high-temperature environments. The procedure is as follows:

(1) Set POWER switch to OFF.

(2) Remove left and right protective panels. Each is fastened on by 16 screws.

(3) When protective panels are removed, four additional screws are exposed on each side. Remove the two top ones on each side.

(4) Remove the 11 screws on top. Note that the two at the front center are flat-head screws, and that the four screws on the right side are shorter than the others.

(5) Lift top cover up and away.

(6) Check that all plug-in printed circuit boards are firmly seated in their sockets.

(7) Check that all readout lamps are intact, firmly seated in their sockets, and secured by the tiedown bracket.

(8) Check for burned or bulging components.

(9) Replace top cover, using the reverse procedure of steps (2) through (5).

5-3. REFERENCE STANDARDS PROCEDURES.

Note

The procedures listed below constitute the minimum number of reference standards which will indicate, when completed, the relative performance of the counter and its plug-in units. The procedures are arranged in groups, each group is associated with a functional section of the counter. The power-supply procedure must be performed first. The remaining tests may be performed in any order without affecting the unity or result of the reference standards.

TABLE 5-1. REFERENCE STANDARDS PROCEDURES

SECTION	ACTION REQUIRED	PROCEDURE STEPS
Power Supply (Table 5-3)	Check dc voltages.	1
	Check ac ripple voltages.	2
Radio Frequency Oscillator (Table 5-4)	Check oscillator power supply.	3
	Check amplitude and frequency of radio-frequency oscillator, output signal.	4

TABLE 5-1. (Continued)

SECTION	ACTION REQUIRED	PROCEDURE STEPS
10 mc and 1 mc Multiplier (Table 5-5)	Check amplitude and frequency of the 1-mc standard-frequency output, using the internal radio-frequency oscillator as a standard.	5
	Check amplitude and frequency of the 10-mc standard-frequency output, using the internal radio-frequency oscillator as a standard.	6
	Check amplitude and frequency of the 10-mc standard-frequency output, using an external 100-kc standard.	7
Count Decades, Readout, and Cycle Control (Table 5-6)	Check count sequence of count decades, and decoding operation of readout section.	8
	Check cycle control in track mode.	9
	Check cycle control and readout section in store mode.	10
Scaler (Table 5-7)	Check amplitude and frequency of the scaled 10-mc test signal.	11
	Check amplitude and frequency of the scaled standard-frequency signal.	12
"A" Amplifier (Table 5-8)	Check sensitivity of "A" amplifier at frequencies between 10 cps and 100 mc.	13 through 22
"B" and "C" Amplifiers (Table 5-9)	Check sensitivity of "B" and "C" amplifiers at frequencies between 1 cps and 1 mc.	23 through 29
	Check that "B" amplifier triggers on negative slope of input signal.	30
	Check that "C" amplifier triggers on negative slope of input signal.	31
Gate Control (Table 5-10)	Check operation of gate control in frequency mode.	32
	Check operation of gate control in manual mode.	33
	Check operation of gate control in period mode.	34
	Check operation of gate control in time-interval mode.	35
	Check operation of gate control in frequency-ratio mode.	36
Count Control (Table 5-11)	Check operation of count control in frequency mode.	37
	Check operation of count control in manual mode.	38
	Check operation of count control in period mode.	39

TABLE 5-1. (Continued)

SECTION	ACTION REQUIRED	PROCEDURE STEPS
Electronic Frequency Converter (Table 5-12)	Check operation of count control in frequency-ratio mode.	40
	Check operation of count control in time-interval mode.	41
	Check sensitivity of frequency converter at frequencies between 35 mc and 100 mc.	42
	Check sensitivity and operation of frequency converter at frequencies between 100 mc and 500 mc.	43 through 60
	Check sensitivity and operation of frequency converter between frequencies of 500 mc and 550 mc.	61

TABLE 5-2. TEST EQUIPMENT REQUIRED FOR REFERENCE STANDARD PROCEDURES

DESIGNATION	NAME
CCUH-801	Dc Differential Voltmeter
ME-6A/U	Electronic Multimeter
AN/USM-140B	Oscilloscope
CAQI-411A	Rf Millivoltmeter
TS-382C/U	Audio Oscillator
Model SSG-1	Signal Generator/Frequency Meter (Gertsch)*
Model 608C	Vhf Signal Generator (Hewlett-Packard)*
Model 612A	Uhf Signal Generator (Hewlett-Packard)*
Type 180A	Time Mark Generator (Tektronix)*
Model 467A	Amplifier (Hewlett-Packard)*

*Or equal.

TABLE 5-3. POWER SUPPLY REFERENCE STANDARDS PROCEDURE

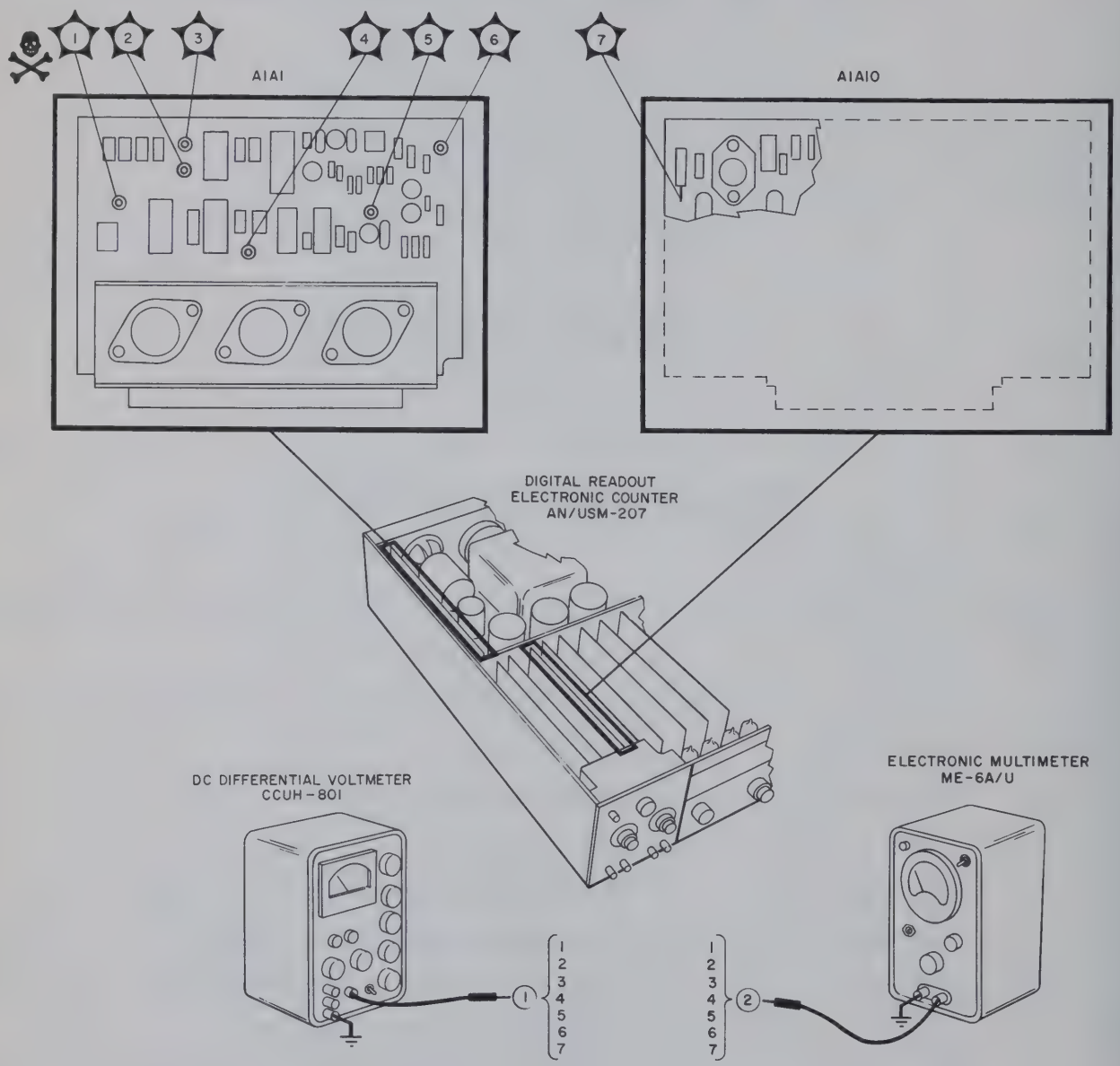

Control Settings:

POWER switch to TRACK

Test Equipment Required:

Dc Differential Voltmeter, CCUH-801
Electronic Multimeter, ME-6A/U

TABLE 5-3. (Continued)

STEP NO.	ACTION REQUIRED	READ INDICATION ON	PERFORMANCE STANDARDS
1	Check dc voltages.	Voltmeter	Test point 1: +170 volts to +240 volts except +155 volts to +200 volts with A1A1 Model 22-524L6. Test point 2: +39.5 volts to +55.0 volts except to 50.0 volts with A1A1 Model 22-524L6. Test point 3: +18 volts ±10% Test point 4: +12 volts ±3% Test point 5: +6 volts ±3% Test point 6: −12 volts ±3% Test point 7: −6 volts ±3%
	PROCEDURE: Remove the top cover from the counter. Ground the voltmeter to the counter chassis and measure voltage at test points illustrated.		
2	Check ac ripple voltages.	Multimeter	Test point 1: 4.2 volts rms except 3.1 volts rms with A1A1 Model 22-524L6. Test point 2: 0.14 volt rms Test point 3: 0.6 volt rms Test point 4: 14 mv rms Test point 5: 7 mv rms Test point 6: 14 mv rms Test point 7: 14 mv rms
	PROCEDURE: Disconnect the voltmeter and ground the multimeter to the counter chassis. Measure voltage at test points illustrated.		

TABLE 5-4. RADIO FREQUENCY OSCILLATOR REFERENCE STANDARDS PROCEDURE

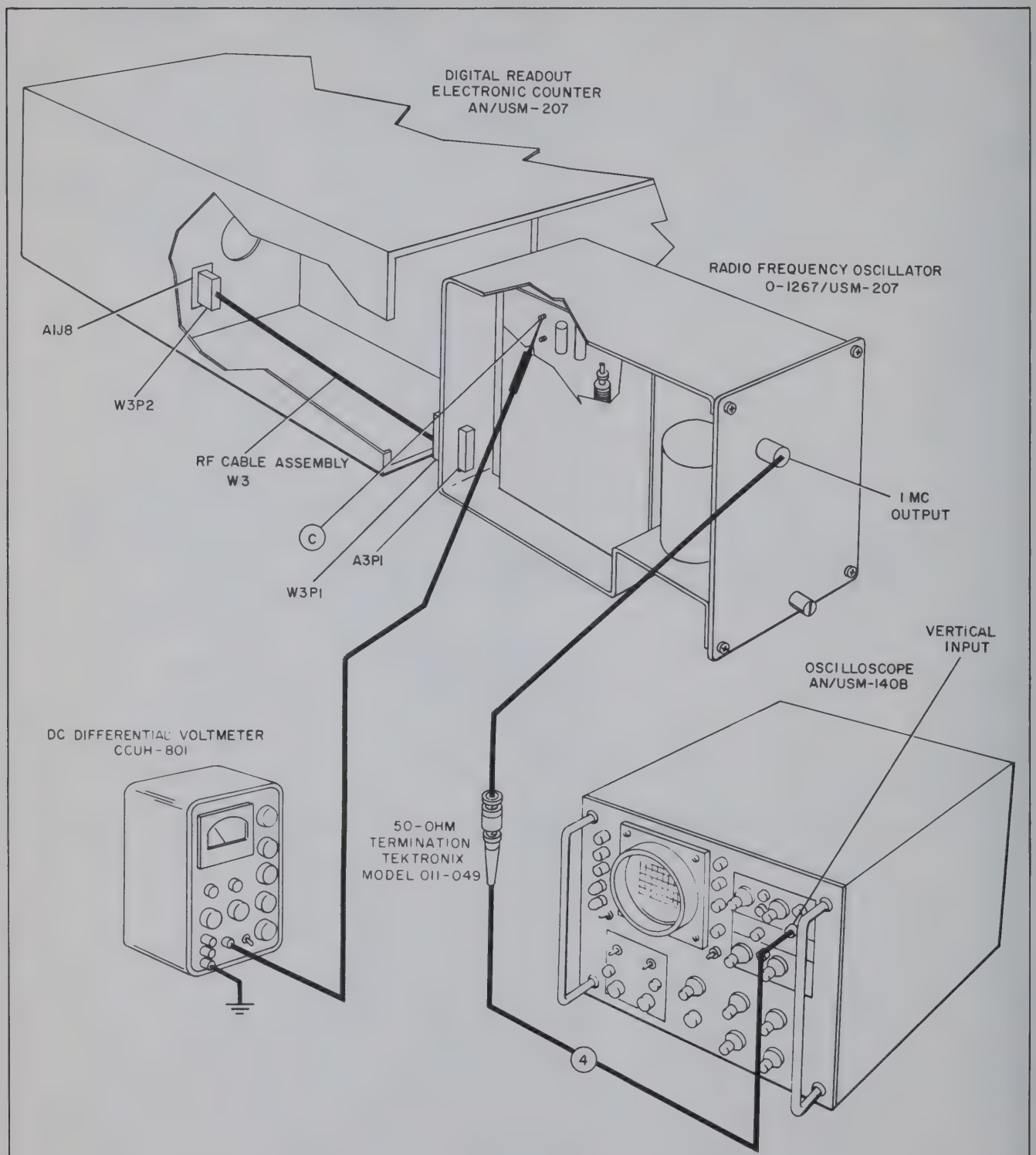

Control Settings:	Adapter Required:	Test Equipment Required:
POWER switch to TRACK	50-ohm BNC Termination Tektronix Model 011-049	Dc Differential Voltmeter, CCUH-801 Oscilloscope, AN/USM-140B

TABLE 5-4. (Continued)

STEP NO.	ACTION REQUIRED	READ INDICATION ON	PERFORMANCE STANDARDS
3	Check oscillator power supply.	Voltmeter	+25 volts dc ±10%
	PROCEDURE: Ground voltmeter to counter chassis and measure voltage at test point C. To gain access to test point C, remove the oscillator plug-in from the counter then reconnect it by means of the rf cable per paragraph 5-5aa.		
4	Check amplitude and frequency of radio frequency oscillator output signal.	Oscilloscope 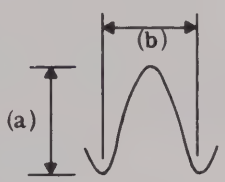	(a)_____vpp (3.5 to 4.5) (b)_____μsec (1)
	PROCEDURE: Set oscilloscope controls for a vertical deflection of 2 v/cm, a sweep rate of 1 μs/cm, and internal triggering. Connect 50-ohm termination to the 1 MC OUT connector. Observe output through the 50-ohm termination.		

TABLE 5-5. 10 MC and 1 MC MULTIPLIER REFERENCE STANDARDS PROCEDURE

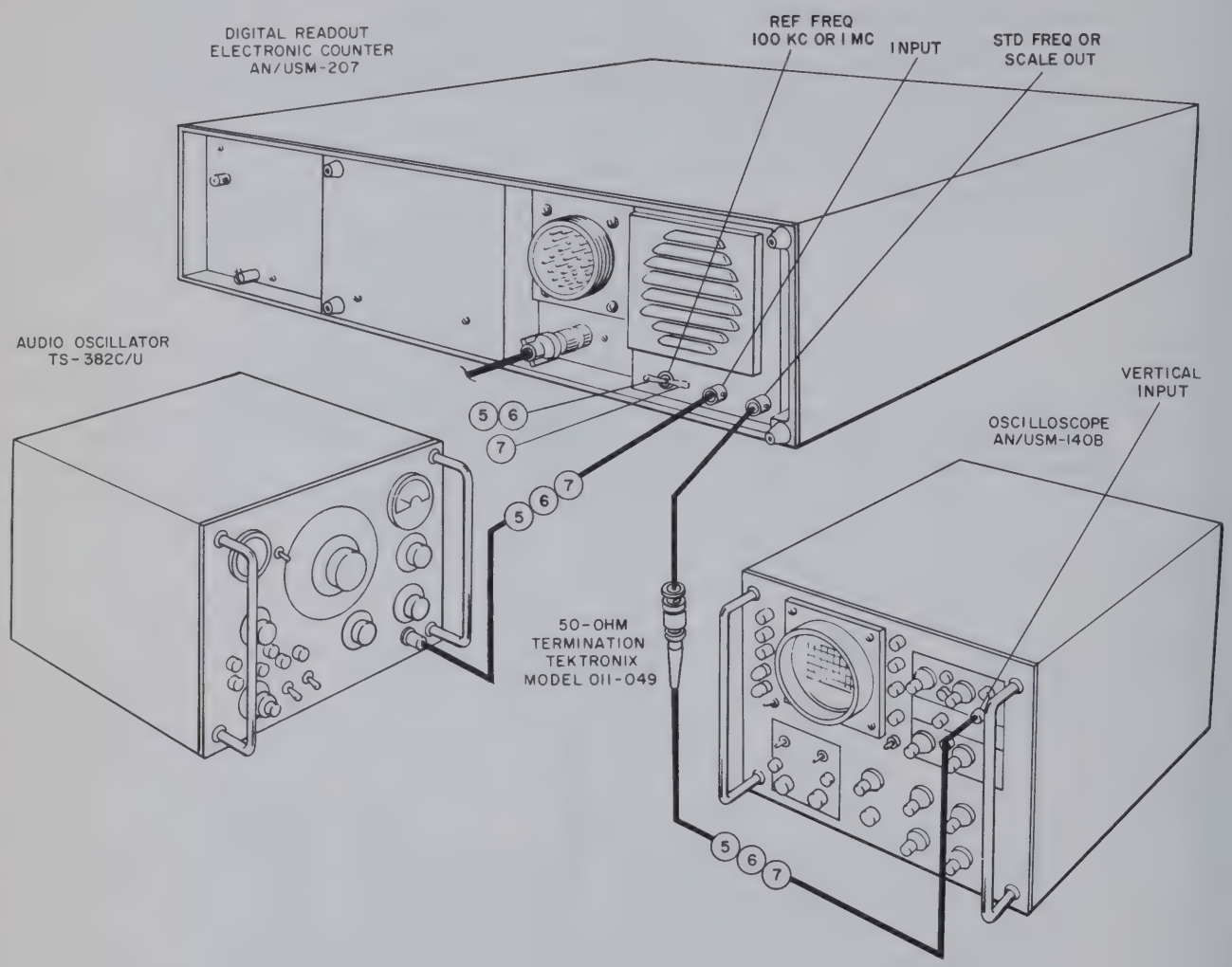

Control Settings:

POWER switch to TRACK
FUNCTION switch to
TIME B→C

Adapter Required:

Tektronix Model 011-049
50 ohm BNC Termination

Test Equipment Required:

Oscilloscope, AN/USM-140B
Audio Oscillator, TS-382C/U

TABLE 5-5. (Continued)

STEP NO.	ACTION REQUIRED	READ INDICATION ON	PERFORMANCE STANDARDS
5	Check amplitude and frequency of the 1-mc standard frequency output, using the internal radio-frequency oscillator as a standard.	Oscilloscope 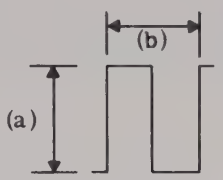	(a)_____vpp (1.2 to 1.8) (b)_____μsec (1)
	PROCEDURE: Set the REF FREQ 100 KC OR 1 MC switch to INT. Set the STD FREQ OUT switch to 10^6. Set the oscilloscope controls for a vertical deflection of 0.5 v/cm, a sweep rate of 1 μs/cm, and internal triggering. Connect 50-ohm termination to the STD FREQ OR SCALE OUT connector, and observe output through the 50-ohm termination.		
6	Check amplitude and frequency of the 10-mc standard frequency output, using the internal radio-frequency oscillator as a standard.	Oscilloscope 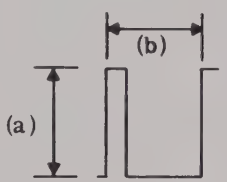	(a)_____vpp (1.2 to 1.8) (b)_____μsec (0.1)
	PROCEDURE: Set oscilloscope controls for a sweep rate of 0.1 μs/cm. Set STD FREQ OUT switch to 10^7, and observe output as in step 4.		
7	Check amplitude and frequency of the 10-mc standard frequency output, using an external 100-kc standard.	Oscilloscope	Same as in step 6 above.
	PROCEDURE: Set signal generator controls for a cw output signal fo 100 kc with an amplitude of approximately 0.5 volt rms. Connect output of signal generator to the time base INPUT connector. Set REF FREQ 100 KC OR 1 MC switch to EXT, and observe output as in step 5.		

TABLE 5-6. COUNT DECADES, READOUT, AND CYCLE CONTROL REFERENCE STANDARDS PROCEDURE

Control Settings:

POWER switch to TRACK
FUNCTION switch to TIME B→C or PERIOD B x M-1
Mode selector switch to SEP

Test Equipment Required:

None

STEP NO.	ACTION REQUIRED	READ INDICATION ON	PERFORMANCE STANDARDS
8	Check count sequence of count decades, and decoding operation of readout section.	Readout	A. Right digit advances from 0 through 9 in numerical order.

TABLE 5-6. (Continued)

STEP NO.	ACTION REQUIRED	READ INDICATION ON	PERFORMANCE STANDARDS
8 (cont)	PROCEDURE: Press RESET switch. Turn B TRIGGER VOLTS control slowly clockwise and then counterclockwise until GATE lamp lights. Set time base switch to the positions shown below, and observe the appropriate readout-digit in each position.		B. Next most-significant digit advances from 0 through 9 in numerical order. C. Remaining six digits advance from 0 through 9 in numerical order.
	A. 1. B. 10. C. 10^2 through 10^7, one position at a time.		
9	Check cycle control in track mode.	Readout and GATE lamp	GATE lamp goes on for 1 second and goes off for approximately 200 milliseconds, in a continuous cycle. When the DISPLAY control is turned clockwise, GATE lamp off-time increases. While the GATE lamp is on, readout cycles. When the GATE lamp is off readout is stationary at 10000.000 ±1 count.
	PROCEDURE: Set FUNCTION switch to FREQ. Set time base switch to 1. Set SENSITIVITY switch to TEST. Set DISPLAY control fully counterclockwise, then turn approximately 1/4 turn in a clockwise direction.		
10	Check cycle control and readout section in store mode.	Readout and GATE lamp	GATE lamp cycles as in step 8. Readout changes only when gate lamp goes out.
	PROCEDURE: Set POWER switch to STORE.		

TABLE 5-7. SCALER REFERENCE STANDARDS PROCEDURE

TABLE 5-7. SCALER REFERENCE STANDARDS PROCEDURE

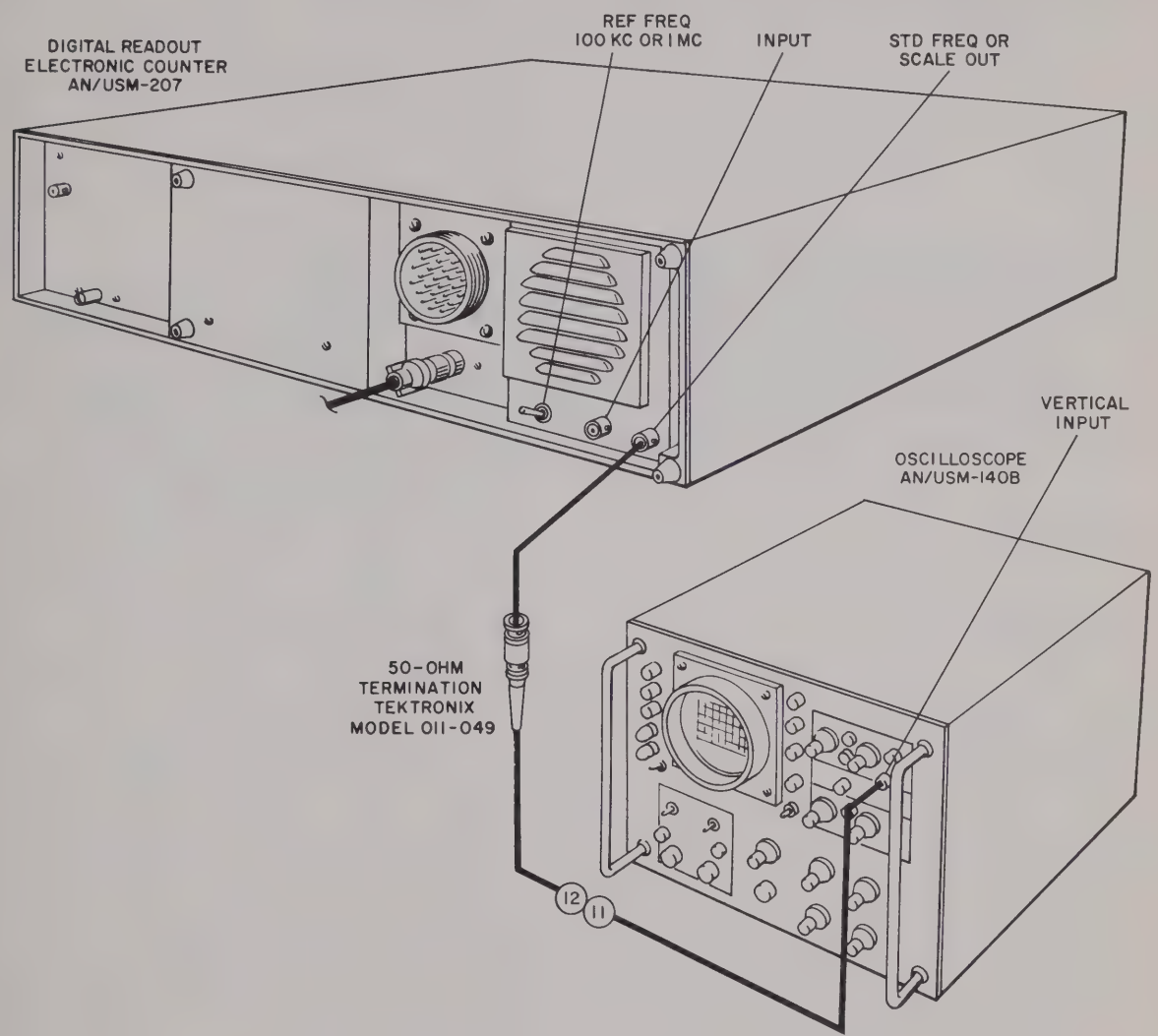

Control Settings:

POWER switch to TRACK
SENSITIVITY switch to TEST
REF FREQ 100 KC OR 1 MC switch to INT
FUNCTION switch to SCALE A

Adapter Required:

50-ohm BNC termination, Tektronix Model 011-049

Test Equipment Required:

Oscilloscope, AN/USM-140B

TABLE 5-7. (Continued)

STEP NO.	ACTION REQUIRED	READ INDICATION ON	PERFORMANCE STANDARDS
11	Check amplitude and frequency of scaled 10-mc test signal.	Oscilloscope 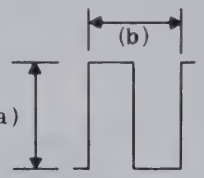	A. (a)_____vpp (1.2 to 1.8) (b)_____μsec (1)
	PROCEDURE: Set oscilloscope controls for a vertical deflection of 0.5 v/cm, a sweep rate of 0.1 μs/cm, and internal triggering. Connect the 50-ohm termination to the STD FREQ OR SCALE OUT connector. Observe output through the 50-ohm termination. Set time base switch to the positions shown below; reduce sweep rate of oscilloscope progressively, and observe waveform at each position of the time base switch.		B. (a)_____vpp (1.2 to 1.8) (b)_____μsec (10)
	A. 10 B. 10^2 C. 10^3 D. 10^4 E. 10^5 F. 10^6 G. 10^7 H. 10^8	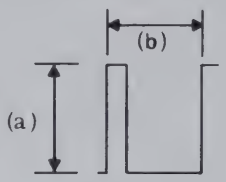 Oscilloscope 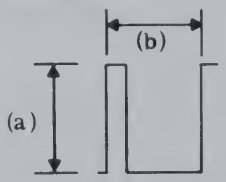	C. (a)_____vpp (1.2 to 1.8) (b)_____μsec (100) D. (a)_____vpp (1.2 to 1.8) (b)_____msec (1) E. (a)_____vpp (1.2 to 1.8) (b)_____msec (10) F. (a)_____vpp (1.2 to 1.8) (b)_____msec (100) G. (a)_____vpp (1.2 to 1.8)

TABLE 5-7. (Continued)

STEP NO.	ACTION REQUIRED	READ INDICATION ON	PERFORMANCE STANDARDS
11 (cont)			(b)_____ sec (1) H. (a)_____ vpp (1.0 to 2.2) (b)_____ sec (10)
12	Check amplitude and frequency of the scaled standard-frequency signal.	Oscilloscope	A. Same as H in step 11.
	PROCEDURE: Set FUNCTION switch to TIME B→C. Press RESET switch. Set oscilloscope controls for a sweep rate of 5 sec/cm. Set STD FREQ OUT switch to the positions shown below; increase sweep rate of oscilloscope progressively, and observe waveform at each position of the STD FREQ OUT switch.		B. Same as G in step 11. C. Same as F in step 11.
	A. 10^{-1} B. 1 C. 10 D. 10^{2} E. 10^{3} F. 10^{4} G. 10^{5} H. 10^{6}		D. Same as E in step 11. E. Same as D in step 11. F. Same as C in step 11. G. Same as B in step 11. H. Same as A in step 11.

TABLE 5-8. A AMPLIFIER REFERENCE STANDARDS PROCEDURE

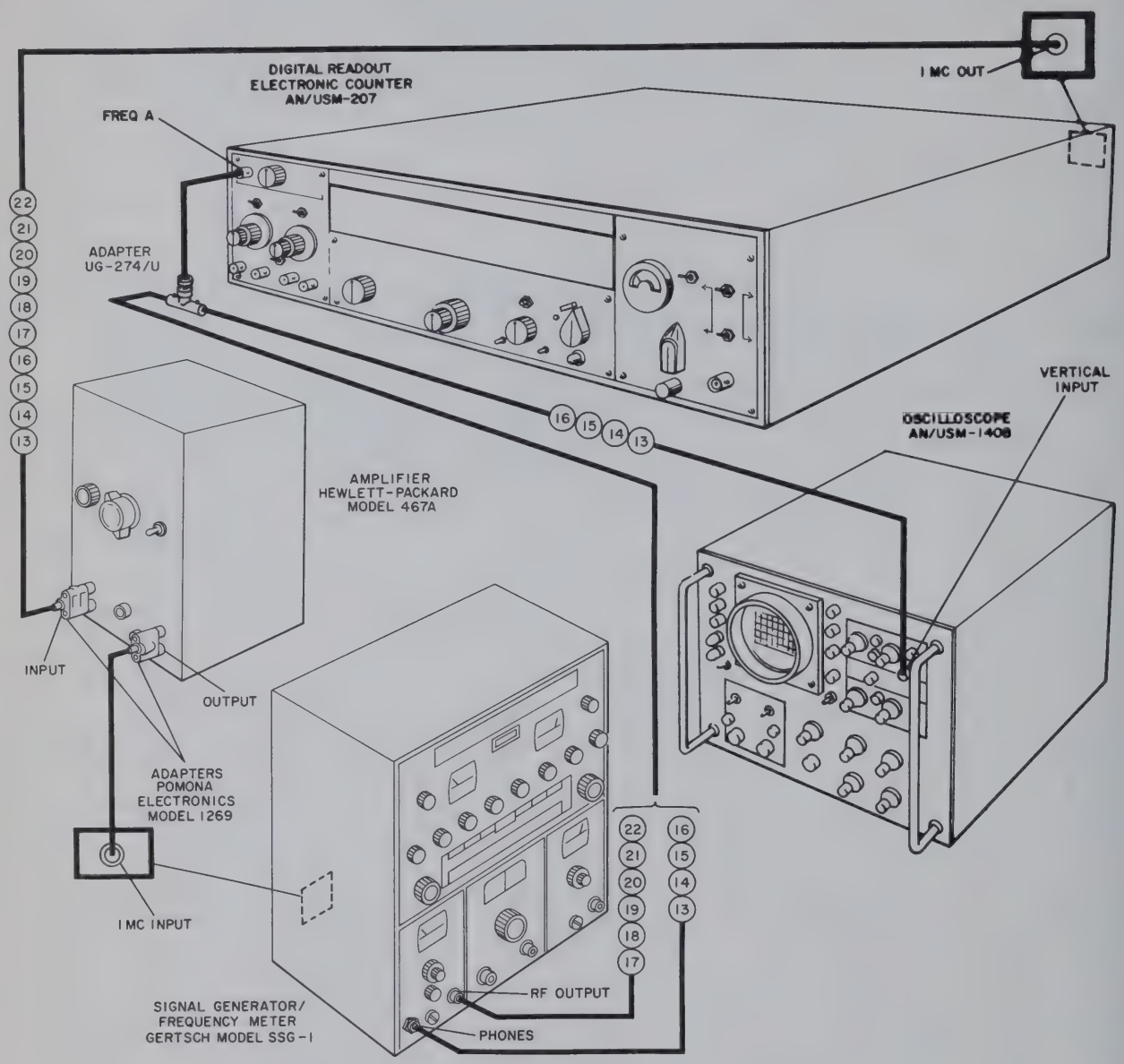

Control Settings:

SENSITIVITY switch to .1 V
FUNCTION switch to FREQ
POWER switch to TRACK
DISPLAY control to MIN
REF FREQ 100 KC OR 1 MC switch to INT

Adapters Required:

Pomona Electronics Co. Model 1269 (2 required)

Test Equipment Required:

Signal Generator/Frequency Meter, Gertsch Model SSG-1

TABLE 5-8. (Continued)

STEP NO.	ACTION REQUIRED	READ INDICATION ON	PERFORMANCE STANDARDS
13	Check sensitivity of "A" amplifier at 10 cps.	Signal Generator, Oscilloscope, and Readout	
	PROCEDURE: Connect signal-generator PHONES output of signal generator to the counter FREQ A connector. Set signal generator for external-standard input. Adjust gain of amplifier until signal generator is driven by external 1-mc standard. Set signal-generator frequency and amplitude to 10 cps, 280 millivolts peak-to-peak. Set counter time base switch to 10^{-1}. Press RESET switch.		0000.0100 KC ±0.0001 kc
14	Check sensitivity of "A" amplifier at 100 cps.	Signal Generator, Oscilloscope, and Readout	
	PROCEDURE: Set signal generator frequency and amplitude to 100 cps, 280 millivolts peak-to-peak.		0000.10000 KC ±0.0001 kc
15	Check sensitivity of "A" amplifier at 1 kc.	Signal Generator, Oscilloscope, and Readout	
	PROCEDURE: Set signal-generator frequency and amplitude to 1 kc, 280 millivolts peak-to-peak.		0.0001.0000 KC ±0.0001 kc
16	Check sensitivity of "A" amplifier at 10 kc.	Signal Generator, Oscilloscope, and Readout	
	PROCEDURE: Set signal-generator frequency and amplitude to 10 kc, 280 millivolts peak-to-peak.		0010.0000 KC ±0.0001 kc
17	Check sensitivity of "A" amplifier at 100 kc.	Signal Generator and Readout	
	PROCEDURE: Connect RF OUTPUT of signal generator to counter FREQ A connector. Set signal-generator frequency and amplitude to 100 kc, 100 millivolts rms.		0100.0000 KC ±0.0001 kc
18	Check sensitivity of "A" amplifier at 1 mc.	Signal Generator and Readout	
	PROCEDURE: Set signal-generator frequency and amplitude to 1 mc, 100 millivolts rms. Set counter time-base switch to 10.		001000.00 KC ±0.01 kc
19	Check sensitivity of "A" amplifier at 10 mc.	Signal Generator and Readout	
	PROCEDURE: Set signal-generator frequency and amplitude to 10 mc, 100 millivolts rms.		010000.00 KC ±0.01 kc
20	Check sensitivity of "A" amplifier at 20 mc.	Signal Generator and Readout	
	PROCEDURE: Set signal-generator frequency and amplitude to 20 mc, 100 millivolts rms.		020000.00 KC ±0.01 kc
21	Check sensitivity of "A" amplifier at 50 mc.	Signal Generator and Readout	

TABLE 5-8. (Continued)

STEP NO.	ACTION REQUIRED	READ INDICATION ON	PERFORMANCE STANDARDS
21 (cont)	PROCEDURE: Set signal-generator frequency and amplitude to 50 mc, 100 millivolts rms.		050000.00 KC ±0.01 kc
22	Check sensitivity of "A" amplifier at 100 mc.	Signal Generator and Readout	
	PROCEDURE: Set signal-generator frequency and amplitude to 100 mc, 100 millivolts rms.		100000.00 KC ±0.01 kc

TABLE 5-9. B AND C AMPLIFIERS REFERENCE STANDARDS PROCEDURE

NOTE

The following procedure must be performed with special test equipment not available on board ship.

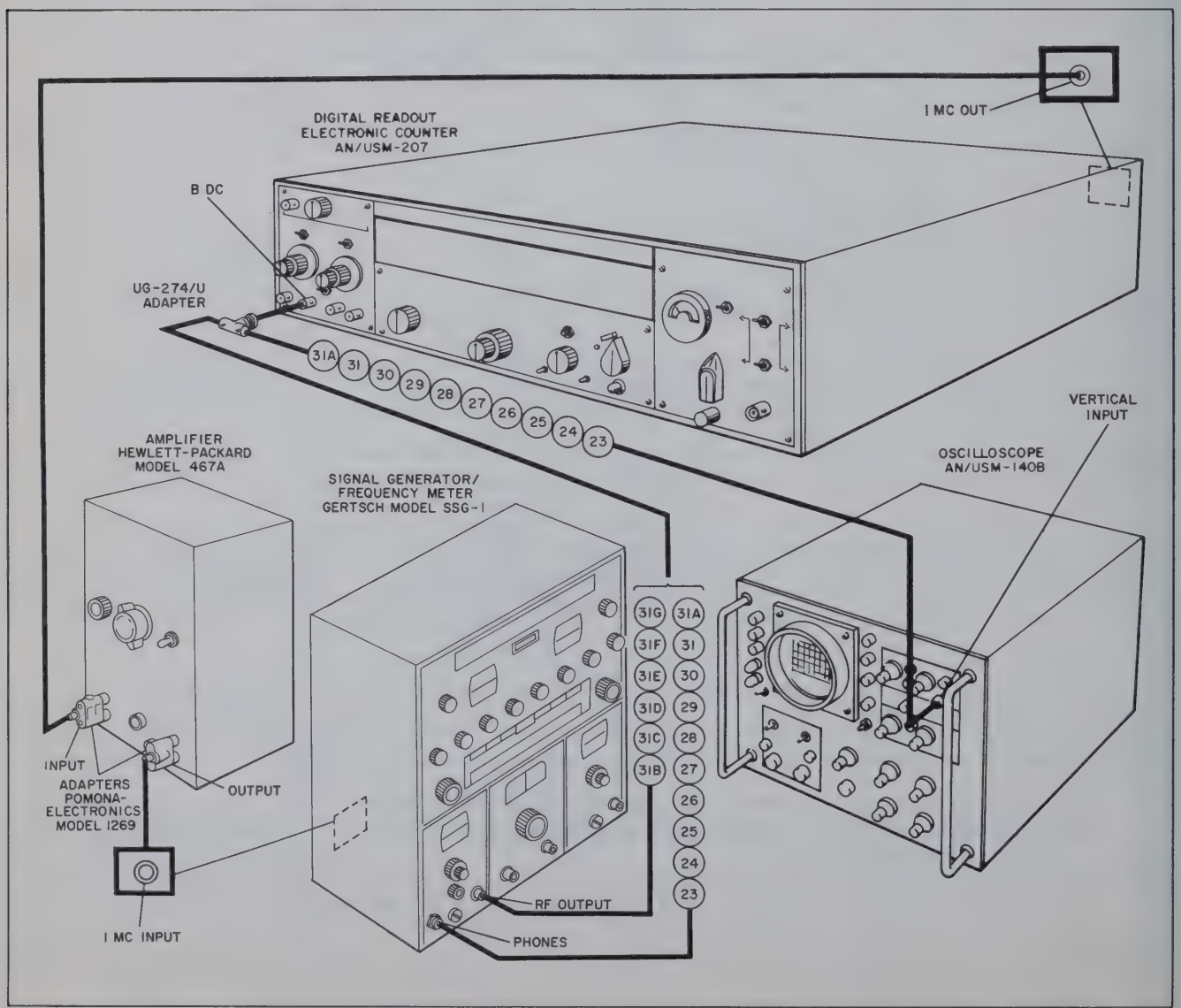

TABLE 5-9. (Continued)

Control Settings:	Adapter Required:	Test Equipment Required:
FUNCTION switch to PERIOD B×M^{-1} POWER switch to TRACK DISPLAY control to MIN REF FREQ 100 KC OR 1 MC switch to INT Mode selector switch to COM B SLOPE switch to + B MULTIPLIER switch to .1 B TRIGGER VOLTS control to 0 C SLOPE switch to + C MULTIPLIER switch to .1 C TRIGGER VOLTS control to 0 Time-base switch to 1 SENSITIVITY switch to FREQ C	Pomona Electronics Co. Model 1269 (2 required)	Signal Generator/Frequency Meter, Gertsch Model SSG-1 Amplifier, Hewlett-Packard Model 467A Oscilloscope, AN/USM-140B

STEP NO.	ACTION REQUIRED	READ INDICATION ON	PERFORMANCE STANDARDS
23	Check sensitivity of "B" amplifier at 5 cps.	Oscilloscope, Signal Generator, and Readout	
	PROCEDURE: Set signal generator/frequency meter for external-standard input. Connect PHONES connector of signal generator to B DC connector of counter. Adjust gain of amplifier until signal generator is driven by external 1-mc standard from counter. Set signal-generator frequency and amplitude for 5 cps, 280 millivolts peak-to-peak as measured on oscilloscope. Press RESET switch.		00200000. μS ±1 μs
24	Check sensitivity of "C" amplifier at 5 cps.	Readout	
	PROCEDURE: Set FUNCTION switch to FREQ. Set time-base switch to 10^{-1}. Press RESET switch.		0000.0050 KC ± 0.0001 kc
25	Check sensitivity of "B" amplifier at 10 cps.	Oscilloscope, Signal Generator, and Readout	
	PROCEDURE: Set time-base switch to 10^{6}. Set signal-generator frequency and amplitude to 10 cps, 280 millivolts peak-to-peak as measured on oscilloscope. Set FUNCTION switch to PERIOD B×M^{-1}. Press RESET switch.		00100000. μS ±1 μs
26	Check sensitivity of "C" amplifier at 10 cps.	Readout	
	PROCEDURE: Set FUNCTION switch to FREQ. Set time-base switch to 10^{-1}. Press RESET switch.		0000.0100 KC ± 0.0001 kc
27	Check sensitivity of "B" amplifier at 100 cps.	Oscilloscope, Signal Generator, and Readout	
	PROCEDURE: Set time-base switch to 10^{6}. Set signal-generator frequency and amplitude to 100 cps, 280 millivolts peak-to-peak as measured on oscilloscope. Set FUNCTION switch to PERIOD B×M^{-1}. Press RESET switch.		00010000. μS ±1 μs
28	Check sensitivity of "C" amplifier at 100 cps.	Readout	
	PROCEDURE: Set FUNCTION switch to FREQ. Set time-base switch to 10^{-1}. Press RESET switch.		0000.1000 KC ±0.0001 kc

TABLE 5-9. (Continued)

STEP NO.	ACTION REQUIRED	READ INDICATION ON	PERFORMANCE STANDARDS
29	Check sensitivity of "B" amplifier at 1 kc.	Oscilloscope, Signal Generator, and Readout	
	PROCEDURE: Set time-base switch to 10^6. Set signal-generator frequency and amplitude to 1 kc, 280 millivolts peak-to-peak as measured on oscilloscope. Set FUNCTION switch to PERIOD B×M^{-1}. Press RESET switch.		00001000. μS ±1 μs
30	Check sensitivity of "C" amplifier at 1 kc.	Readout	
	PROCEDURE: Set FUNCTION switch to FREQ. Set time-base switch to 10^{-1}. Press RESET switch.		0001.0000 KC ±0.0001 kc
31	Check sensitivity of "B" amplifier at 10 kc.	Oscilloscope, Signal Generator, and Readout	
	PROCEDURE: Set time-base switch to 10^6. Set signal-generator frequency and amplitude to 10 kc, 280 millivolts peak-to-peak as measured on oscilloscope. Set FUNCTION switch to PERIOD B×M^{-1}. Press RESET switch.		0000100.0 μS ±0.1 μs
31A	Check sensitivity of "C" amplifier at 10 kc.	Readout	
	PROCEDURE: Set FUNCTION switch to FREQ. Set time-base switch to 10^{-1}. Press RESET switch.		0010.0000 KC ±0.0001 kc
31B	Check sensitivity of "B" amplifier at 100 kc.	Signal Generator and Readout	
	PROCEDURE: Connect RF OUTPUT connector of signal generator to B DC connector of counter. Set time-base switch to 10^7. Set signal-generator frequency and amplitude for 100 kc, 100 millivolts rms. Set FUNCTION switch to PERIOD B×M^{-1}. Press RESET switch.		0000010.0 μS ±0.1 μs
31C	Check sensitivity of "C" amplifier at 100 kc.	Readout	
	PROCEDURE: Set FUNCTION switch to FREQ. Set time-base switch to 10^{-1}. Press RESET switch.		0100.0000 KC ±0.0001 kc
31D	Check sensitivity of "B" amplifier at 1 mc.	Signal Generator and Readout	
	PROCEDURE: Set time-base switch to 10^7. Set signal-generator frequency and amplitude to 1 mc, 100 millivolts rms. Set FUNCTION switch to PERIOD B×M^{-1}. Press RESET switch.		0000001.0 μS ±0.1 μs
31E	Check sensitivity of "C" amplifier at 1 mc.	Readout	
	PROCEDURE: Set FUNCTION switch to FREQ. Set time-base switch to 10. Press RESET switch.		001000.00 KC ±0.01 kc
31F	Check that "C" amplifier triggers on negative slope of input signal.	Readout	
	PROCEDURE: Set C SLOPE switch to −. Press RESET switch.		001000.00 KC ±0.01 kc

TABLE 5-9. (Continued)

STEP NO.	ACTION REQUIRED	READ INDICATION ON	PERFORMANCE STANDARDS
31G	Check that "B" amplifier triggers on negative slope of input signal.	Readout	0000001.0 μS ±0.1 μs
	PROCEDURE: Set time-base switch to 10^7. Set FUNCTION switch to PERIOD B × M − 1. Set B SLOPE switch to −. Press RESET switch.		

TABLE 5-10. GATE CONTROL REFERENCE STANDARDS PROCEDURE

Control Settings:	Test Equipment Required:
POWER switch to TRACK REF FREQ 100 KC OR 1 MC switch to INT DISPLAY control to MIN	None

STEP NO.	ACTION REQUIRED	READ INDICATION ON	PERFORMANCE STANDARDS
32	Check operation of gate control in frequency mode.	GATE lamp	GATE lamp cycles on and off in a continuous cycle. On-time is 10 seconds in the 10-1 position, 1 second in the 1 position, and 150 milliseconds in all other positions of the time base switch.
	PROCEDURE: Set FUNCTION switch to FREQ. Press RESET switch. Set SENSITIVITY switch to TEST. Starting at the 10^{-1} position, turn time-base switch clockwise, one position at a time, through the 10^7 position. Observe action of GATE lamp in each position of the time-base switch.		
33	Check operation of gate control in manual mode.	GATE lamp and digital display.	When the FUNCTION switch is set to START, GATE lamp goes on, and display cycles. When the FUNCTION switch is set to STOP,
	PROCEDURE: Set FUNCTION switch first to START and then to STOP.		

TABLE 5-10. (Continued)

STEP NO.	ACTION REQUIRED	READ INDICATION ON	PERFORMANCE STANDARDS
33 (cont)			GATE lamp goes off and display is stationary.
34	Check operation of gate control in period mode.	GATE lamp	GATE lamp goes on and off, alternately, each time the B TRIGGER VOLTS control is turned in both directions.
	PROCEDURE: Set FUNCTION switch to PERIOD × 1. Press RESET switch. Set B SLOPE switch to +. Turn B TRIGGER VOLTS control slowly clockwise and then counterclockwise, wait approximately 5 to 10 seconds, then turn again clockwise and counterclockwise.		
35	Check operation of gate control in time-interval mode.	GATE lamp	GATE lamp goes on the first time the B TRIGGER VOLTS control is turned in both directions; subsequent turnings of the B TRIGGER VOLTS control do not affect the GATE lamp. GATE lamp goes off the first time the C TRIGGER VOLTS control is turned in both directions; subsequent turnings of the C TRIGGER VOLTS control do not affect the GATE lamp.
	PROCEDURE: Set FUNCTION switch to TIME B → C. Press RESET switch. Set B and C SLOPE switches to +. Turn B TRIGGER VOLTS control slowly clockwise and then counterclockwise several times in succession. Next, turn the C TRIGGER VOLTS control slowly clockwise and then counterclockwise several times in succession.		
36	Check operation of gate control in frequency-ratio mode.	GATE lamp	As in step 34.
	PROCEDURE: Set time base switch to RATIO A/B × M. Press RESET switch. Set other controls as in step 34.		

TABLE 5-11. COUNT CONTROL REFERENCE STANDARDS PROCEDURE

NOTE

The following procedure must be performed with special test equipment not available on board ship.

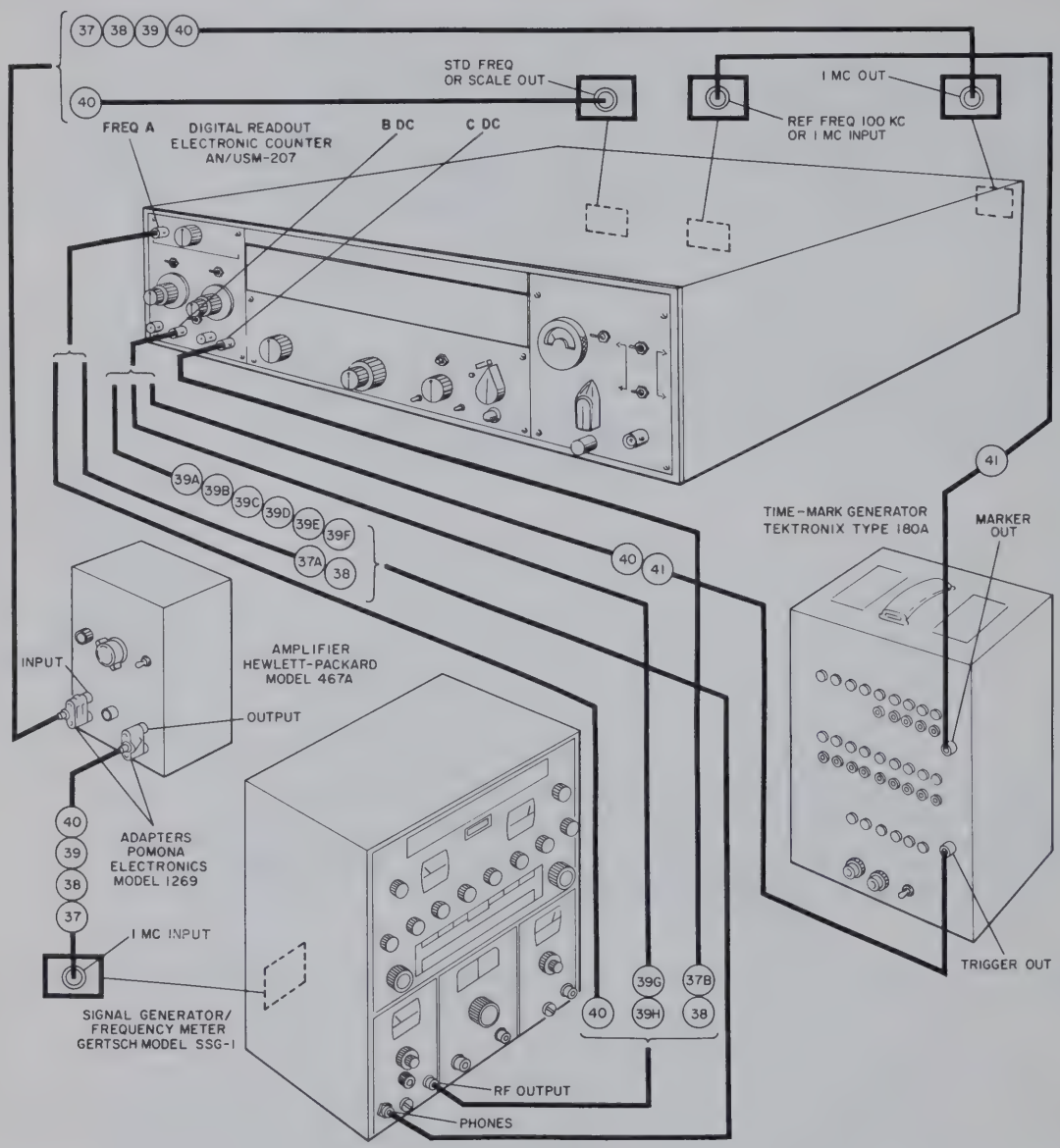

Control Settings:

POWER switch to TRACK
REF FREQ 100 KC OR 1 MC switch to INT
DISPLAY control to MIN
Mode selector switch to SEP

Adapters:

Pomona Electronics Co. Model 1269 (2 required)

Test Equipment Required:

Signal Generator/Frequency Meter, Gertsch Model SSG-1
Amplifier, Hewlett-Packard Model 467A
Time-Mark Generator, Tektronix Type 180A

TABLE 5-11. (Continued)

STEP NO.	ACTION REQUIRED	READ INDICATION ON	PERFORMANCE STANDARDS
37	Check operation of count control in frequency mode.	Signal Generator and Readout	A. 0010.0000 KC ±0.0001 kc. B. 1000.0000 KC ±0.0001 kc
	PROCEDURE: A. Set FUNCTION switch to FREQ. Set SENSITIVITY switch to .1 V. Set time-base switch to 10^{-1}. Connect PHONES connector of signal generator to FREQ. A connector of counter. Set signal generator for external-standard input. Adjust gain of amplifier until signal generator is driven by external standard from counter. Set signal-generator frequency to 10 kc, maximum amplitude. Press RESET switch. (Do not remove connection to FREQ. A connector after this step, although it is not functional in step 37B.) B. Set SENSITIVITY switch to FREQ. C. Set C TRIGGER VOLTS control to 0. Set C MULTIPLIER switch to .1. Connect RF OUTPUT connector of signal generator to the C DC connector. Set signal-generator frequency to 1 mc, maximum amplitude. Press RESET switch. (Do not remove connection to FREQ. C connector after this step.)		
38	Check operation of count control in manual mode.	Frequency Meter and Readout	Display advances numerically at a slow rate when SENSITIVITY switch is set to .1 V, and at a fast rate when the SENSITIVITY switch is set to FREQ. C.
	PROCEDURE: Set SENSITIVITY switch to .1 V. Set FUNCTION switch to STOP. Press RESET switch. Set FUNCTION switch to START. While observing digital display, set SENSITIVITY switch alternately to FREQ. C and .1 V.		
39	Check operation of count control in period mode.	Signal Generator and Readout	A. 020000.0 μS ±0.1 μs B. 0100000.0 μS ±0.1 μs C. 100000.00 μS ±0.01 μs D. 10000.000 μS ±0.001 μs E. 1000.0000 μS ±0.0001 μs F. 100.00000 μS ±0.00001 μs G. 10.000000 μS ±00.000001 μs H. 01.000000 μS ±0.000001 μs

PROCEDURE: Set B TRIGGER VOLTS control to 0. Set B MULTIPLIER switch to .1. Set time-base switch to 10^{7}. Connect PHONES connector of signal generator to the B DC connector. Set signal-generator frequency and counter FUNCTION switch to the positions listed below. Press RESET switch prior to each measurement.

	SIGNAL GENERATOR FREQUENCY	FUNCTION SWITCH POSITION
A.	5 cps	1
B.	10 cps	1
C.	10 cps	10
D.	100 cps	10^{2}
E.	1 kc	10^{3}
F.	10 kc	10^{4}

NOTE

In steps G and H, connect RF OUTPUT of signal generator to B DC connector. Set signal generator for maximum amplitude output in each step.

G.	100 kc	10^{5}
H.	1 mc	10^{5}

TABLE 5-11. (Continued)

STEP NO.	ACTION REQUIRED	READ INDICATION ON	PERFORMANCE STANDARDS
40	Check operation of count control in frequency-ratio mode.	Signal Generator and Readout	A. 00050000. ±2 B. 0020000.0 ±0.2 C. 010000.00 ±0.02 D. 01000.000 ±0.02 E. 0100.0000 ±0.0002
	PROCEDURE: Connect time-mark generator TRIGGER OUT connector to counter B DC connector. Connect counter STD FREQ OR SCALE OUT connector to amplifier input. Connect time-mark generator MARKER OUT connector to counter 100 KC OR 1 MC INPUT connector. Set counter REF FREQ 100 KC OR 1 MC switch to EXT. Set counter STD FREQ OUT switch to 10^6. Set counter time-base switch to RATIO A/B×M. Set counter SENSITIVITY switch to .1 V. Connect RF OUTPUT connector of signal generator to counter FREQ. A connector. Set time-mark generator to provide a 1-kc signal at TRIGGER OUT connector and a 1-microsecond marker at the MARKER OUT connector. Set signal-generator frequency and counter FUNCTION switch to the values and positions listed below. Press RESET switch prior to each measurement. A. SIGNAL GENERATOR FREQUENCY: 50 mc; FUNCTION SWITCH POSITION: 1 B. 20 mc; 10 C. 10 mc; 10^2 D. 1 mc; 10^3 E. 100 kc; 10^4		
41	Check operation of count control in time-interval mode.	Readout	A. 00000001. SEC ±1 sec B. 0000001.0 SEC ±0.1 sec C. 000001.00 SEC ±0.01 sec D. 00001000. MS ±1 ms E. 0001000.0 MS ±0.1 ms F. 001000.00 MS ±0.01 ms G. 01000000 μS ±1 μs H. 1000000.0 μS ±0.1 μs
	PROCEDURE: Set FUNCTION switch to TIME B→C. Set B SLOPE and C SLOPE switches to +. Set B MULTIPLIER and C MULTIPLIER switches to 1. Set B TRIGGER LEVEL control to +3. Set C TRIGGER LEVEL control to +2. Set mode selector switch to COM. Set time-mark generator signal output to 1 cps. Set counter time-base switch to the following positions: Press RESET switch prior to each measurement. A. 1 B. 10 C. 10^2 D. 10^3 E. 10^4 F. 10^5 G. 10^6 H. 10^7		

TABLE 5-12. ELECTRONIC FREQUENCY CONVERTER REFERENCE STANDARDS PROCEDURE

NOTE

The following procedure must be performed with special test equipment not available on board ship.

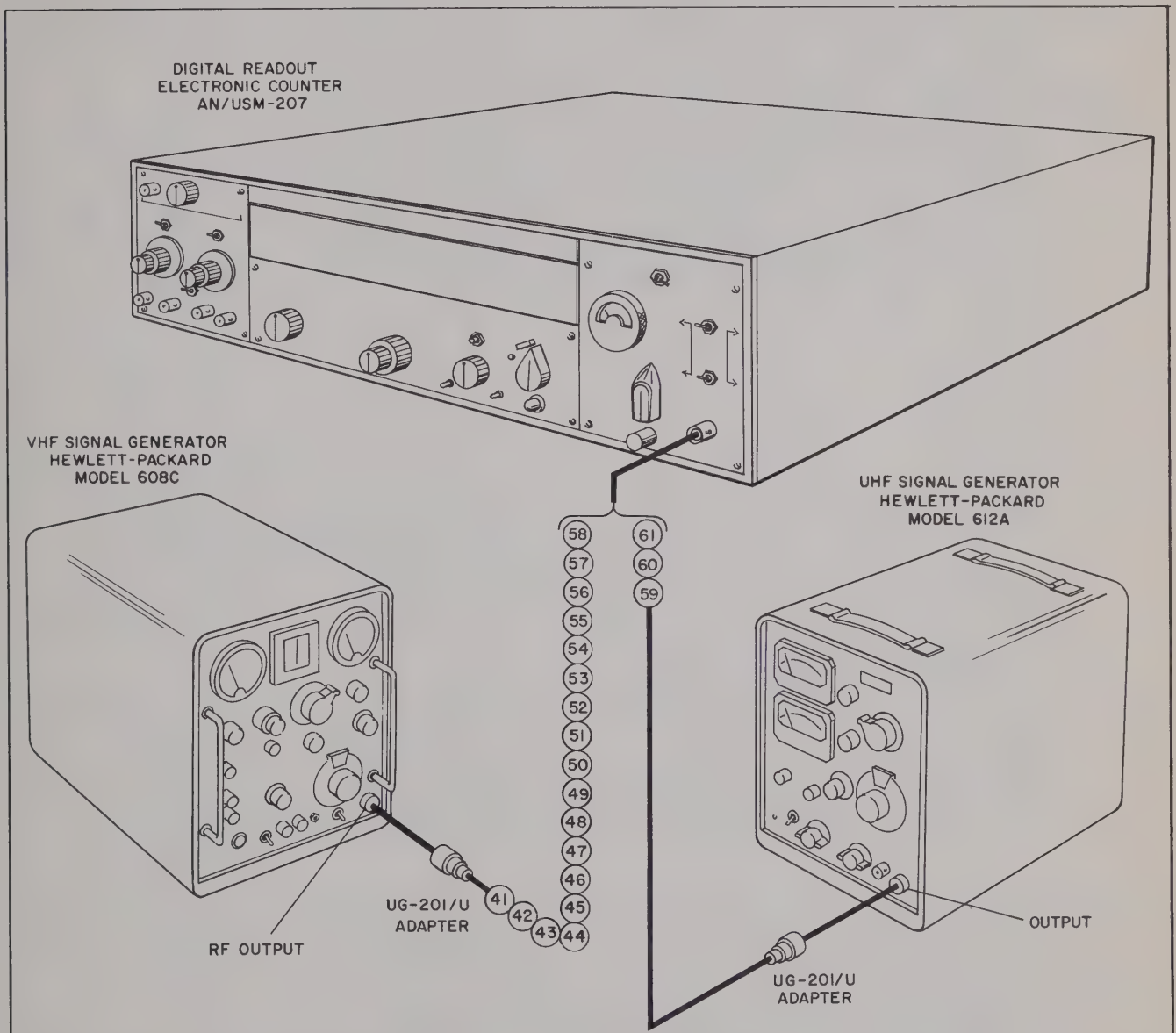

Control Settings:

POWER switch to TRACK
REF FREQ 100 KC OR 1 MC switch to INT
DISPLAY control to MIN
SENSITIVITY switch to PLUG-IN
FUNCTION switch to FREQ
Both converter attenuator switches to the right (10V MAX position)
Time base switch to 10^3

Adapters Required:

Two Adapters
UG-201/U

Test Equipment Required:

Vhf Signal Generator, Hewlett-Packard Model 608C
Uhf Signal Generator, Hewlett-Packard Model 612A

TABLE 5-12. (Continued)

STEP NO.	ACTION REQUIRED	READ INDICATION ON	PERFORMANCE* STANDARDS
42	Check sensitivity of the frequency converter at frequencies between 35 mc and 100 mc.	LEVEL METER and digital display	Digital display is: A. 00035000. KC ±1 kc B. 00050000. KC ±1 kc C. 00075000. KC ±1 kc D. 00100000. KC ±1 kc LEVEL METER in all cases reads in the green zone.
	PROCEDURE: Set DIRECT-HETERODYNE switch to DIRECT. Connect output of vhf signal generator to the converter INPUT connector. Set level control and attenuation control of the vhf signal generator fully counterclockwise. Set output frequency of vhf signal generator to approximately 50 mc. Adjust level control and attenuation control of vhf signal generator for a 10-millivolt output. Set both converter attenuator switches to the left (0.1V MAX position). Set output frequency of vhf signal generator as shown below. For each output frequency, readjust level control for a 10-millivolt output. A. 35 mc B. 50 mc C. 75 mc D. 100 mc		
43	Check sensitivity and operation of frequency converter at 85 mc.	LEVEL METER and digital display	Digital display is: 00015000. KC ±1 kc LEVEL METER reads in the green zone.
	PROCEDURE: Set output frequency of vhf signal generator to 85 mc. Adjust level control of the vhf signal generator for a 10-millivolt output. Set both converter attenuator switches to the left. Set the mixing frequency selector switch to 100, and the DIRECT-HETERODYNE switch to HETERODYNE.		
44	Check sensitivity and operation of frequency converter at 101 mc.	LEVEL METER and digital display	Digital display is: 00049000. KC ±1 kc LEVEL METER in both cases reads in the green zone.
	PROCEDURE: Set output frequency of vhf signal generator to 101 mc, and adjust output level for 10 millivolts. Set mixing frequency selector switch to 150.		
45	Check sensitivity and operation of frequency converter at 150 mc.	LEVEL METER and readout	Digital display in both cases is: 00050000. KC ±1 kc LEVEL METER in both cases reads in the green zone.
	PROCEDURE: Set output frequency of vhf signal generator to 150 mc, and adjust output level for 10 millivolts. Set mixing frequency selector switch to the positions shown below: A. 100 B. 200		
46	Check sensitivity and operation of frequency converter at 194 mc.	LEVEL METER and readout	Digital display is: A. 00044000. KC ±1 kc
	PROCEDURE: Set output frequency of vhf signal generator to 194 mc and adjust output level for 10 millivolts. Set mixing frequency selector switch to the positions shown below:		

*Numerical display-values, as listed, represent those obtained under ideal conditions. Actual values depend on the dial accuracy of the signal generator.

TABLE 5-12. (Continued)

STEP NO.	ACTION REQUIRED	READ INDICATION ON	PERFORMANCE* STANDARDS
46 (cont)	A. 150 B. 200		B. 00006000. KC ±1 kc LEVEL METER in both cases reads in the green zone.
47	Check sensitivity and operation of frequency converter at 196 mc.	LEVEL METER and digital display.	Digital display is: A. 00046000. KC ±1 kc B. 00054000. KC ±1 kc LEVEL METER in both cases reads in the green zone.
	PROCEDURE: Set output frequency of vhf signal generator to 196 mc and adjust output level for 10 millivolts. Set mixing frequency selector switch to the positions shown below: A. 150 B. 250		
48	Check sensitivity and operation of frequency converter at 210 mc.	LEVEL METER and readout	Digital display is: A. 00010000. KC ±1 kc B. 00040000. KC ±1 kc LEVEL METER in both cases reads in the green zone.
	PROCEDURE: Set output frequency of vhf signal generator to 210 mc and adjust output level for 10 millivolts. Set mixing frequency selector switch to the positions shown below: A. 200 B. 250		
49	Check sensitivity and operation of frequency converter at 242 mc.	LEVEL METER and readout	Digital display is: A. 00042000. KC ±1 kc B. 00008000. KC ±1 kc C. 00058000. KC ±1 kc LEVEL METER in all three cases reads in the green zone.
	PROCEDURE: Set output frequency of vhf signal generator to 242 mc and adjust output level for 10 millivolts. Set mixing frequency selector switch to the positions shown below: A. 200 B. 250 C. 300		
50	Check sensitivity and operation of frequency converter at 250 mc.	LEVEL METER and readout	Digital display in both cases is: 00050000. KC ±1 kc LEVEL METER in both cases reads in the green zone.
	PROCEDURE: Set output frequency of vhf signal generator to 250 mc and adjust output level for 10 millivolts. Set mixing frequency selector switch to the positions shown below: A. 200 B. 300		

*Numerical display-values, as listed, represent those obtained under ideal conditions. Actual values depend on the dial accuracy of the signal generator.

TABLE 5-12. (Continued)

STEP NO.	ACTION REQUIRED	READ INDICATION ON	PERFORMANCE* STANDARDS
51	Check sensitivity and operation of frequency converter at 304 mc.	LEVEL METER and readout	Digital display is: A. 00054000. KC ±1 kc B. 00046000. KC ±1 kc LEVEL METER in both cases reads in the green zone.
	PROCEDURE: Set output frequency of vhf signal generator to 304 mc and adjust output level for 10 millivolts. Set mixing frequency selector switch to the positions shown below: A. 250 B. 350		
52	Check sensitivity and operation of frequency converter at 306 mc.	LEVEL METER and readout.	Digital display is: A. 00056000. KC ±1 kc B. 00006000. KC ±1 kc C. 00044000. KC ±1 kc LEVEL METER in all three cases reads in the green zone.
	PROCEDURE: Set output frequency of vhf signal generator to 306 mc and adjust output level for 10 millivolts. Set mixing frequency selector switch to the positions shown below: A. 250 B. 300 C. 350		
53	Check sensitivity and operation of frequency converter at 350 mc.	LEVEL METER and readout	Digital display in both cases is: 00050000. KC ±1 kc LEVEL METER in both cases reads in the green zone
	PROCEDURE: Set output frequency of vhf signal generator to 350 mc and adjust output level for 10 millivolts. Set mixing frequency selector switch to the positions shown below: A. 300 B. 400		
54	Check sensitivity and operation of frequency converter at 394 mc.	LEVEL METER and readout	Digital display is: A. 00044000. KC ±1 kc B. 00006000. KC ±1 kc C. 00056000. KC ±1 kc LEVEL METER in all three cases reads in the green zone.
	PROCEDURE: Set output frequency of vhf signal generator to 394 mc and adjust output level for 10 millivolts. Set mixing frequency selector switch to the positions shown below: A. 350 B. 400 C. 450		
55	Check sensitivity and operation of frequency converter at 396 mc.	LEVEL METER and readout	Digital display is: A. 00046000. KC ±1 kc

*Numerical display-values, as listed, represent those obtained under ideal conditions. Actual values depend on the dial accuracy of the signal generator.

TABLE 5-12. (Continued)

STEP NO.	ACTION REQUIRED	READ INDICATION ON	PERFORMANCE* STANDARDS
55 (cont)	PROCEDURE: Set output frequency of vhf signal generator to 396 mc and adjust output level for 10 millivolts. Set mixing frequency selector switch to the positions shown below: A. 350 B. 450		B. 00054000. KC ±1 kc LEVEL METER in both cases reads in the green zone.
56	Check sensitivity and operation of frequency converter at 404 mc.	LEVEL METER and readout	Digital display is: A. 00054000. KC ±1 kc B. 00046000. KC ±1 kc LEVEL METER in both cases reads in the green zone.
	PROCEDURE: As in step 55, with output frequency of vhf signal generator set to 404 mc.		
57	Check sensitivity and operation of frequency converter at 406 mc.	LEVEL METER and readout.	Digital display is: A. 00056000. KC ±1 kc B. 00006000. KC ±1 kc C. 00044000. KC ±1 kc LEVEL METER in all three cases reads in the green zone.
	PROCEDURE: Set output frequency of vhf signal generator to 406 mc and adjust output level for 10 millivolts. Set mixing frequency selector switch as shown below: A. 350 B. 400 C. 450		
58	Check sensitivity and operation of frequency converter at 450 mc.	LEVEL METER and readout	Digital display in both cases is: 00050000. KC ±1 kc LEVEL METER in both cases reads in the green zone.
	PROCEDURE: Set output frequency of vhf signal generator for 450 mc and adjust output level for 10 millivolts. Set mixing frequency selector switch to the positions shown below: A. 400 B. 500		
59	Check sensitivity and operation of frequency converter at 494 mc.	LEVEL METER and readout	Digital display is: A. 00044000. KC ±1 kc B. 00006000. KC ±1 kc LEVEL METER in both cases reads in the green zone.
	PROCEDURE: Replace vhf signal generator with uhf signal generator and connect its output to the converter INPUT connector. Set level control and attenuation control of uhf signal generator fully counter-clockwise. Set output frequency of uhf signal generator to 494 mc. Adjust level control and attenuation control of uhf signal generator for a 10-millivolt output. Set mixing frequency selector switch to the positions shown below:		

*Numerical display-values, as listed, represent those obtained under ideal conditions. Actual values depend on the dial-accuracy of the signal generator.

TABLE 5-12. (Continued)

STEP NO	ACTION REQUIRED	READ INDICATION ON	PERFORMANCE* STANDARDS
59 (cont)	A. 450 B. 500		
60	Check sensitivity and operation of frequency converter at 500 mc.	LEVEL METER and readout	LEVEL METER reads in the green zone, and digital display is 00050000. KC ±1 kc.
	PROCEDURE: As in step 59, with the output frequency of uhf signal generator set to 500, and with the mixing frequency selector switch set to 450 only.		
61	Check sensitivity and operation of frequency converter at frequencies between 500 mc and 550 mc.	LEVEL METER and readout	Digital display is: A. 00006000. KC ±1 kc B. 00011000. KC ±1 kc C. 00050000. KC ±1 kc LEVEL METER in all three cases reads in the green zone.
	PROCEDURE: Set mixing frequency selector to 500. Set both converter attenuator switches to the left. Set output of the uhf signal generator to the frequencies shown below. At each frequency, readjust the output level control of the uhf signal generator for 10 millivolts. A. 506 mc. B. 511 mc. C. 550 mc.		

*Numerical display-values, as listed, represent those obtained under ideal conditions. Actual values depend on the dial-accuracy of the signal generator.

TABLE 5-13. COUNTER CONTROL SETTINGS

CONTROL	SETTING
POWER switch (A1S1)	STORE
DISPLAY control (A1R1)	MIN (fully counterclockwise)
FUNCTION switch (A1S4)	FREQ
Time base switch (A1S3)	10^6
SENSITIVITY switch (A1A21S7)	TEST
REF FREQ 100 KC OR 1 MC switch (A1S13)	INT
Mode selector switch (A1S9)	SEP

CONTROL	SETTING
B TRIGGER VOLTS control (A1A22R33)	0
C TRIGGER VOLTS control (A1A23R46)	0
B SLOPE switch (A1S10)	+
C SLOPE switch (A1S12)	+
B MULTIPLIER switch (A1A22S8)	.1
C MULTIPLIER (A1A23S11)	.1

5-4. TUNING AND ADJUSTMENT.

a. REMOVING THE TOP COVER.— To perform adjustments on the counter, it is first necessary to remove the top cover as described in paragraph 5-2.

b. CONTROL SETTINGS.— Unless instructed otherwise, perform all adjustment procedures with the counter controls set to the positions shown in table 5-13.

c. EXTENDING PRINTED-CIRCUIT BOARDS.— In order to gain access to all adjustments, test points and parts, certain printed-circuit boards must be extended. For this purpose, a printed-circuit board extender is supplied. When extended, all parts of the printed-circuit board are exposed while electrical connection is maintained. Refer to figure 5-1 and proceed as follows:

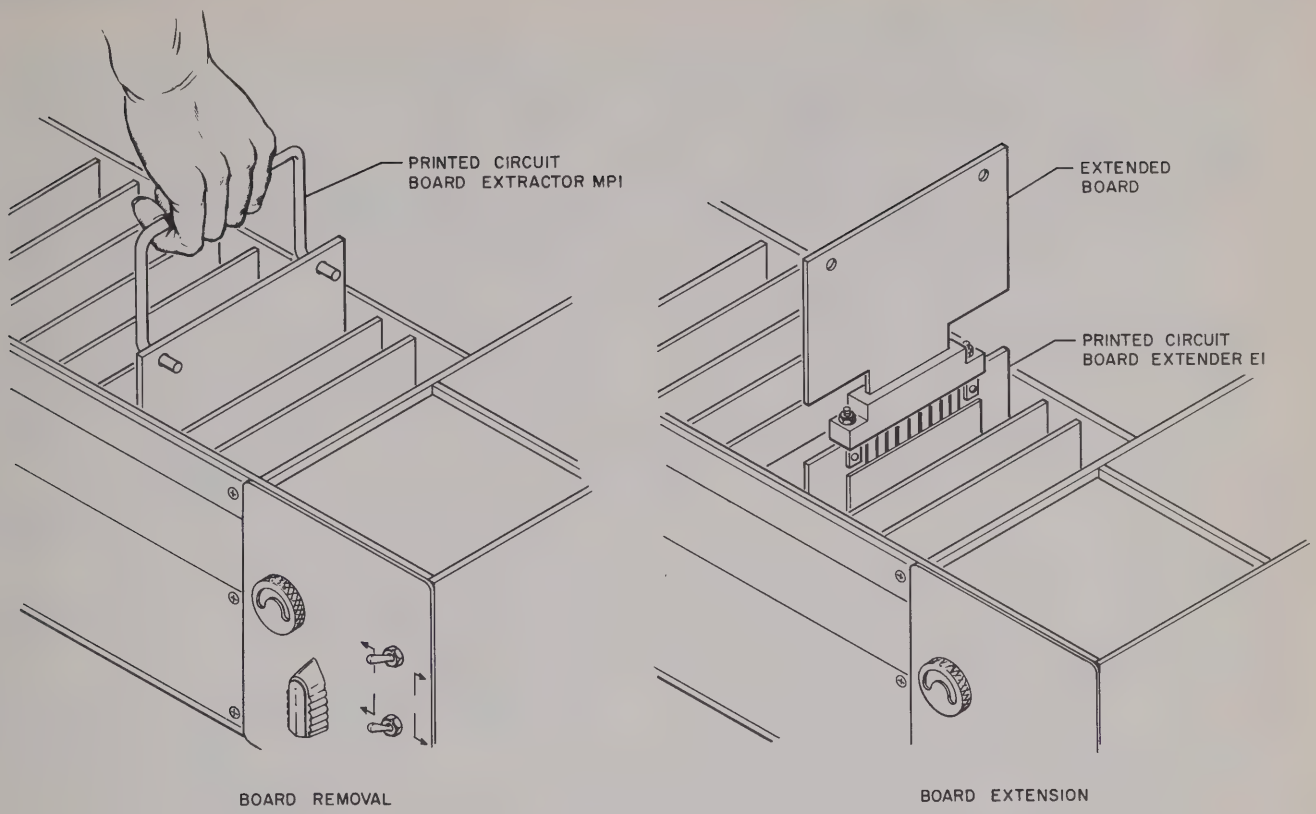

Figure 5-1. Printed Circuit Board Removal and Extension

(1) Set POWER switch to OFF.

CAUTION

Do not install circuit board into or remove circuit board from extender until 5 seconds after POWER switch is set to STBY or OFF.

Note

If the printed-circuit board contains a readout indicator, it is first necessary to remove the tie-down bracket A1MP23 which secures these printed-circuit boards. The tie-down bracket is fastened by the two screws, one at each end.

(2) Insert board-extractor hooks into the two holes at the top of the printed-circuit board to be extended.

(3) Note orientation of the printed-circuit board.

(4) Grasp the board-extractor handle firmly and pull up with a slow, even pressure.

(5) Insert the printed-circuit board extender into the empty socket.

(6) Insert the printed-circuit board into the socket on top of the printed-circuit board extender. Be sure it is oriented as noted in step (3).

(7) Set POWER switch to TRACK or STORE, and perform adjustment procedure as required.

(8) After the adjustment procedure has been completed, set POWER switch to OFF.

(9) Remove the printed-circuit board from the extended socket.

(10) Remove the printed-circuit-board extender.

(11) Orient the printed-circuit board as noted in step (3); it is keyed with its socket and can be inserted only when oriented the correct way.

(12) Insert the replacement board evenly within each guide channel, then push down with a slow, even pressure until it is seated firmly in its socket.

(13) Replace tie-down bracket if it was removed following step (1).

d. POWER SUPPLY REGULATOR A1A1 ADJUSTMENT.— The power supply regulator adjustment and test points are shown on figures 4-30, 5-2, 5-38, and 5-45.

WARNING

Regulated voltages as high as 180 volts which are dangerous to life may be encountered in the following procedure. Use extreme caution and follow the instructions carefully.

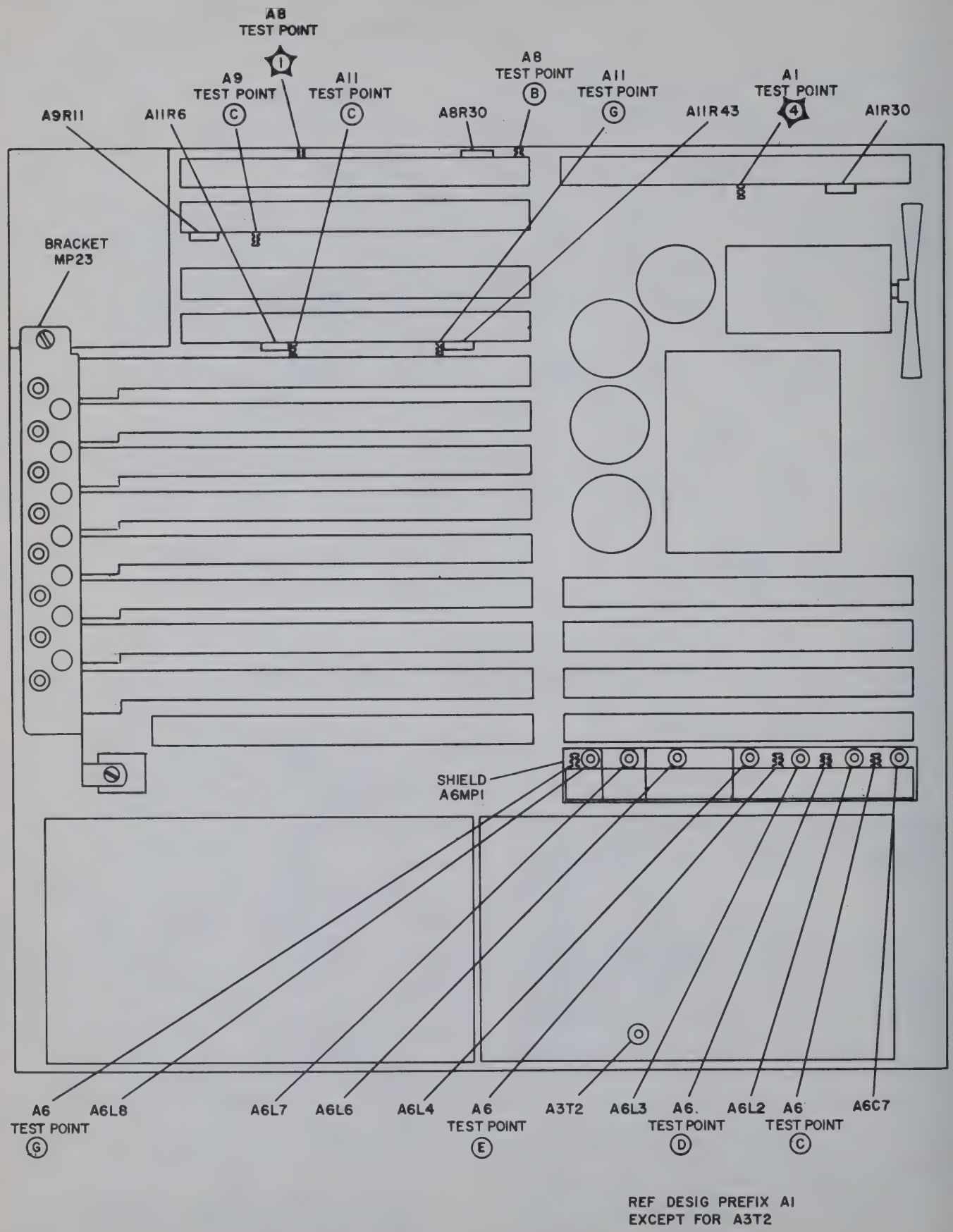

Figure 5-2. Counter Top View, Location of Adjustments and Test Points

Note

The following procedure must be performed with special test equipment not available on board ship.

(1) TEST EQUIPMENT.

(a) Dc Differential Voltmeter, CCUH-801.

(b) Wattmeter, Hickcock Model 900C, or Triplett Model 661 with a minimum range of 0 to 200 watts and 0 to 150 volts.

(c) Transformer, Variable Output, Superior Model 3PN116 or equivalent, with an input voltage of 115 rms ±10%, a voltage-calibrated dial and output voltage adjustable from 0V to 135 volt rms, a current rating of 5 amperes or greater and a three-terminal output receptacle.

(2) TEST SETUP.

(a) Insert power plug of transformer into a 115-volt power source, and set power switch of transformer to on.

(b) Insert power plug of wattmeter into the output receptacle of the transformer, and set transformer output voltage for approximately 115 volts.

(c) Insert power plug of counter into the output receptacle of the wattmeter, and adjust transformer output control for an exact reading of 115 volts on the wattmeter voltage-scale.

(3) INSTRUCTIONS.

(a) Set voltmeter RANGE switch to 50 and monitor test point 4.

(b) Adjust A1A1R8 to obtain an exact reading of +12 volts dc at test point 4.

e. FREQUENCY MULTIPLIER A1A6 ADJUSTMENT. — The frequency multiplier A1A6 adjustments and test points are shown on figures 4-10, 5-2, and 5-41.

Note

The following procedure must be performed with special test equipment not available on board ship.

(1) TEST EQUIPMENT AND REFERENCE INPUT.

(a) Oscilloscope, AN/USM-140B.

(b) External frequency standard, AN/URQ-9 or AN/URQ-10.

(c) Uhf Signal Generator, Hewlett-Packard Model 612A or equivalent, with a 4-millivolt, 460-mc output.

(2) INSTRUCTIONS.

(a) Extend A1A6 per paragraph 5-4c.

(b) Set time base switch to 10^6.

(c) Set REF FREQ 100 KC OR 1 MC switch to EXT.

(d) Connect the 100-kc output of the external reference standard to the time base INPUT receptacle.

(e) Set oscilloscope controls for a vertical deflection of 5 v/cm, for a sweep rate of 1 ms/cm, and for internal triggering.

(f) Connect oscilloscope ground lead to the counter chassis.

(g) While monitoring the test points with the oscilloscope probe, perform the adjustments listed in table 5-14. When necessary, change the oscilloscope control settings to obtain an optimum trace. When properly adjusted, the tuning slugs of A1A6L2, A1A6L3 and A1A6L4 extend approximately 1/4 inch from the top of the coil form, and the tuning slugs of A1A6L6, A1A6L7, and A1A6L8 extend approximately 1/2 inch from the top of the coil form.

(h) Set REF FREQ 100 KC OR 1 MC switch to INT.

(i) Turn the time base switch from 10^6 to 1 in a counterclockwise direction, and observe the readout at each position. Readout should be as indicated in table 3-4.

(j) If readout is not as indicated in table 3-4, repeat the procedure of table 5-14.

(k) Replace A1A6 per paragraph 5-4c.

Note

The following steps apply only when the converter is installed.

(l) Set SENSITIVITY switch to PLUG-IN.

(m) Set FUNCTION switch to FREQ.

(n) Set both converter attenuator switches to the right (10 V MAX position).

(o) Connect the uhf-signal-generator output to the converter INPUT connector with a UG-201/U adapter.

(p) Set the uhf-signal-generator output to a frequency of 460 mc at a level of 4 millivolts.

(q) Connect the oscilloscope between test point 1 of A1A8 (figure 5-33) and ground.

(r) Set the oscilloscope sweep time to 20 μsec/cm, and set the oscilloscope controls for external triggering.

(s) Set STD FREQ OUT switch on counter to 10^5.

(t) With a UG-201/U adapter, connect the STD FREQ OR SCALE OUT connector on the counter to the sweep input connector on the oscilloscope.

(u) Set both converter attenuator switches to the left.

(v) Set converter FREQUENCY TUNING–MC switch to 450.

(w) A cw signal should appear on the oscilloscope with some amplitude modulation. This modulation can have both 1-mc and 2-mc components. Adjust A1A6L6 (figure 5-2) slightly until the 2-mc component has a minimum amplitude. Adjust both A1A6L7 and A1A6L6 slightly until the 1-mc component has a minimum amplitude. Tuning of A1A6L6 and A1A6L7 should not be more than one turn from the position set in step g above.

(x) Set the REF FREQ 100 KC OR 1 MC switch to EXT.

(y) The oscilloscope display may have a 100-kc amplitude modulation. Slightly adjust A1A6L7 to minimize the amplitude of this modulation.

(z) The oscilloscope display may have a 500-kc amplitude modulation. Slightly adjust A1A8L2 to minimize the amplitude of this modulation.

TABLE 5-14. FREQUENCY MULTIPLIER A1A6 ADJUSTMENTS

MONITOR TEST POINT	ADJUST	CORRECT TRACE
C	A1A6C7	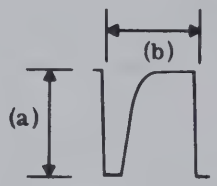 (a)_____vpp (10) (b)_____μsec (2)
D	A1A6L2	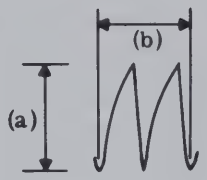 (a)_____vpp (12) (b)_____μsec (1)
E	A1A6L3 and A1A6L4, alternately	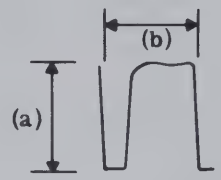 (a)_____vpp (3) (b)_____μsec (1)
G	A1A6L6, A1A6L7, and A1A6L8, alternately	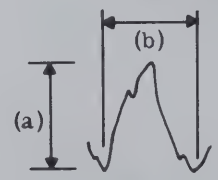 (a)_____vpp (3) (b)_____μsec (0.1)

f. AMPLIFIER-ELECTRONIC GATE A1A8 ADJUSTMENT.— The af-rf amplifier A1A8 adjustment and test point are shown on figures 4-17, 5-2, and 5-43.

(1) TEST EQUIPMENT.

(a) Oscilloscope, AN/USM-140A.

(b) Audio oscillator, TS-382C/U.

(2) INSTRUCTIONS.

(a) Extend A1A8 per paragraph 5-4c.

(b) Set audio oscillator controls for a 10-kc, 0.3-volt-rms output, and connect output signal to the FREQ A receptacle.

(c) Set oscilloscope controls for a vertical deflection of 5 v/cm, for a sweep rate of 10 ms/cm, and for internal triggering.

(d) Set counter SENSITIVITY switch to .1 V.

(e) Connect oscilloscope ground lead to the counter chassis, and connect oscilloscope-probe to test point B.

(f) While observing waveform on oscilloscope, adjust A1A8R30 until the positive and negative halves of the waveform are of the same width (50% duty cycle).

(g) Replace A1A6 per paragraph 5-4c.

g. FREQUENCY DIVIDER A1A9 ADJUSTMENT.— The frequency divider test point and adjustment are shown in figures 4-24, 5-2, and 5-44.

(1) TEST EQUIPMENT. Oscilloscope, AN/USM-140A.

(2) INSTRUCTIONS.

(a) Set counter SENSITIVITY switch to 100 V.

(b) Set oscilloscope controls for a vertical deflection of 1 v/cm, for a sweep rate of 1 ms/cm or less, and for internal triggering.

(c) Adjust oscilloscope trigger level control to obtain a bright horizontal trace.

(d) Connect oscilloscope ground lead to the counter chassis.

(e) Connect oscilloscope probe to test point C.

(f) Turn A1A9R11 fully clockwise.

(g) Position the trace on the center horizontal grid line.

(h) Turn A1A9R11 slowly counterclockwise to a point where trace just starts to move up, then back off one-half turn.

(i) Set SENSITIVITY switch to TEST, time base switch to 10^4, and observe the readout. Readout should be as indicated in table 3-4.

h. AF-RF AMPLIFIER A1A11 ADJUSTMENT.— The AF-RF amplifier A1A11 adjustments and test points are shown in figures 4-8, 4-9, 5-2, and 5-46.

(1) TEST EQUIPMENT.

(a) Oscilloscope, AN/USM-140A.

(b) Audio Oscillator, TS-382C/U.

(2) INSTRUCTIONS.

(a) Set audio oscillator controls for a 10-kc, 0.3-v rms output, and connect output signal to the B AC input connector.

(b) Set oscilloscope controls for a vertical deflection of 2 v/cm, for a sweep rate of 10 ms/cm, and for internal triggering.

(c) Set mode selector switch to COM.

(d) Connect oscilloscope ground lead to the counter chassis, and connect oscilloscope probe to test point C.

(e) While observing waveform on oscilloscope, adjust A1A11R6 until the positive and negative-halves of the waveform are of the same width (50% duty cycle).

(f) Transfer oscilloscope probe to test point G and adjust A1A11R43 until the positive and negative halves of the waveform are of the same width.

i. RADIO FREQUENCY OSCILLATOR A3, FREQUENCY ADJUSTMENT.— The frequency adjustments of the radio frequency oscillator are accessible when the electronic frequency converter is removed (figure 5-36).

(1) REMOVING THE ELECTRONIC FREQUENCY CONVERTER A1A2.

(a) Loosen the thumbscrew on the bottom center of the converter front panel.

(b) Slide the converter toward the front and out of the counter chassis.

(2) WARMUP. Allow a minimum period of 8 hours for warmup before adjusting the oscillator. Warmup power is delivered to the oscillator when the counter is connected to a 115-volt power source and the counter POWER switch is set to either STBY, TRACK, or STORE.

Note

The following procedure must be performed with special test equipment not available on board ship.

(3) TEST EQUIPMENT AND FREQUENCY STANDARD.

(a) Oscilloscope, AN/USM-140A.

(b) Frequency standard, AN/URQ-9 or AN/URQ-10.

(4) TEST SETUP.

(a) Connect frequency standard to the trigger input connector of the oscilloscope.

(b) Connect lead between oscilloscope chassis and frequency standard ground.

(c) Set oscilloscope controls for a vertical deflection of 0.2 v/cm and sweep rate of 1 μsec/cm.

(d) Connect oscilloscope probe to the 1 MC OUT connector of the counter.

(5) INSTRUCTIONS.

(a) Set oscilloscope triggering source switch to external ac, and observe waveform. Waveform will be drifting across the face of the screen.

(b) Loosen the two hold-down screws (figure 5-36).

(c) Adjust COARSE control to obtain minimum waveform drift.

(d) (Deleted.)

(e) Allow approximately 10 seconds for the oscillator to stabilize; then adjust COARSE control to obtain zero drift. If this is not possible, proceed to step (f).

(f) Set FINE control to the center of its tuning range.

(g) Adjust COARSE control to obtain minimum waveform drift.

(h) Adjust the FINE control to obtain zero waveform drift.

(i) Tighten the two hold-down screws.

(j) Replace converter and secure with thumbscrew.

j. RADIO FREQUENCY OSCILLATOR A3 AMPLITUDE ADJUSTMENT.— The radio frequency oscillator amplitude adjustment A3T2 is shown in figures 4-4 and 5-2.

(1) TEST EQUIPMENT. Oscilloscope, AN/USM-140A.

(2) DUMMY LOAD. 50-ohm BNC Termination, Tektronix Model 011-049.

(3) TEST SETUP.

(a) Connect male-end of 50-ohm termination to the 1 MC OUT connector.

(b) Connect oscilloscope probe to the female-end of the 50-ohm termination.

(c) Set oscilloscope controls to obtain a vertical deflection of 0.5 v/cm and sweep rate of 1 ms/cm.

(4) INSTRUCTIONS.

(a) Set oscilloscope triggering source switch to internal, and observe waveform.

(b) Adjust A3T2 for a symmetrical sine-wave with minimum amplitude of 0.5 v rms (2.8 cm vertical deflection).

jA. SENSITIVITY CONTROL A1R51 ADJUSTMENT.— The sensitivity control A1R51 is shown in figure 5-33.

Note

The following procedure does not apply to counters with serial No. A4 through A13, A15, A17, A18, A20, A21, A22, A24 through A28, A30, A31, A33, and A36.

(1) PRELIMINARY TEST SETUP.

(a) Set POWER switch to OFF.

(b) Loosen the thumbscrew on the bottom center of the converter.

(c) Slide the converter toward the front and remove it from the counter.

(2) TEST EQUIPMENT.

(a) Vhf Signal Generator, Hewlett-Packard Model 608C or equivalent, with a frequency output of 50 mc and an adjustable output level from at least 25 millivolts to 100 millivolts rms.

(3) TEST ACCESSORIES.

(a) Connector adapter, type UG-201/U or equivalent.

(4) TEST SETUP.

(a) Connect output of vhf signal generator to connector A1J10 (figure 5-36). Use the adapter to mate with A1J10.

(5) INSTRUCTIONS.

(a) Set the vhf signal generator to provide an output of 50 mc.

(b) Set SENSITIVITY switch to PLUG-IN.

(c) Set POWER switch to TRACK.

(d) Set DISPLAY control to ∞.

(e) Set time base switch to 10^8.

(f) Set FUNCTION switch to MAN START.

(g) Adjust amplitude of vhf signal generator to any value between 50 and 60 millivolts rms.

(h) Momentarily depress RESET switch.

(i) Starting at the extreme counterclockwise position, adjust sensitivity control A1R51 to the first clockwise position at which any count is indicated on the digital display. This should be a spasmodic trickle, not steady, count.

(j) Decrease the output of the vhf signal generator to 80 millivolts rms. A continuous steady count should be indicated on the digital display. If not, adjust A1R51 slightly in a clockwise direction to the first position at which a steady count is indicated.

(k) Set POWER switch to OFF.

(l) Remove connection from vhf signal generator.

(m) Install converter and secure with thumbscrew.

k. ELECTRONIC FREQUENCY CONVERTER A2 ADJUSTMENT.—

(1) PRELIMINARY TEST SETUP (figure 5-3).

(a) Set POWER switch to OFF.

(b) Loosen the thumbscrew on the bottom center of the converter.

(c) Slide the converter toward the front and out of the counter chassis, and set it on a work bench near the counter.

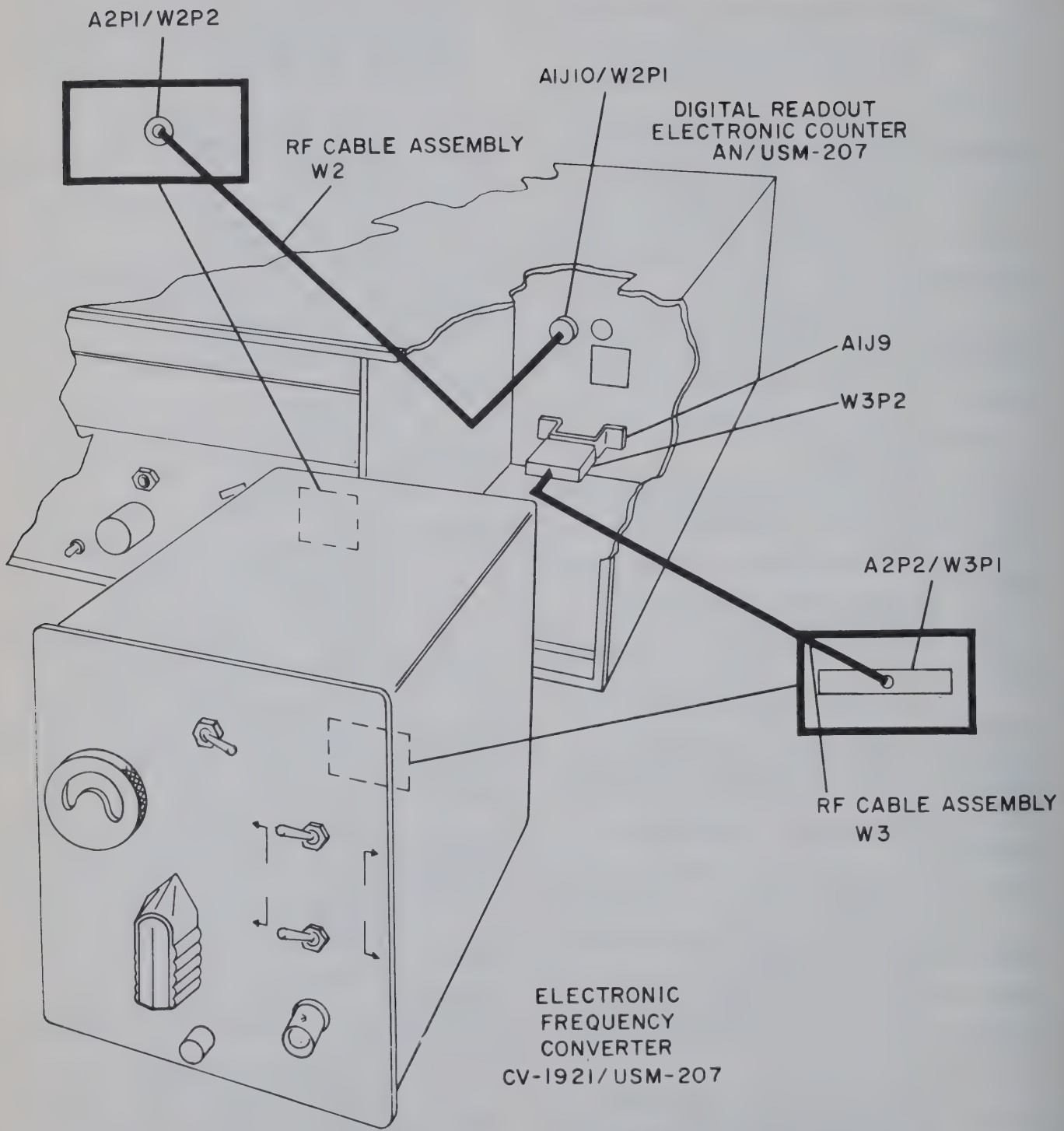

Figure 5-3. Electronic Frequency Converter A2, Preliminary Test Setup

(d) Connect W3P1 connector of rf cable assembly W3 to A2P2 of the converter; connect W3P2 connector of rf cable assembly W3 to A1J9 of the counter (figures 5-36 and 5-51).

(e) Connect rf cable assembly W2 to A2P1 of the converter; connect the male end to A1J10 of the counter.

(f) Set POWER switch to STORE.

Note

The following procedures must be performed with special test equipment not available on board ship.

(2) TEST EQUIPMENT.

(a) Uhf Signal Generator, Hewlett Packard Model 612A or equivalent, with a minimum frequency range of 480 mc to 650 mc, and with an adjustable output level.

(b) Vhf Signal Generator, Hewlett Packard Model 608C or equivalent, with a minimum frequency range of 100 mc to 480 mc, and with an adjustable output level.

(c) Rf Millivoltmeter, CAQI-411A.

(d) Oscilloscope, AN/USM-140B and/or Tektronix Model 585 with Type 82 Plug-in.

(3) TEST ACCESSORIES.

(a) 50-ohm BNC Termination, Tektronix Model 011-049 or equivalent.

(b) BNC Probe Adapter, Tektronix Model 013-054 or equivalent.

(c) Two connector adapters, Type UG-201/U or equivalent.

(4) INSTRUCTIONS FOR ADJUSTING THE FREQUENCY MULTIPLIER A2A1.

(a) Set POWER switch to OFF.

(b) Unsolder center conductor of coaxial lead from test point B (figures 4-4 and 5-4).

(c) Connect a 51-ohm resistor between test point B and converter ground.

(d) Connect test setup as shown in figure 5-5.

(e) Set POWER switch to TRACK or STORE.

(f) Set oscilloscope controls for a vertical deflection of 2 v/cm, a sweep rate of 0.02 ms/cm, and internal triggering. To obtain this sweep time, set variable time/cm switch to .1 and use 5 x magnifier.

(g) Connect oscilloscope probe to test point B and oscilloscope ground lead to the converter chassis.

(h) Adjust A2A1T5 (figure 5-4) for a 50-mc sine wave with a maximum amplitude.

(i) Adjust A2A1T4 for a 50-mc sine wave with a maximum amplitude.

(j) Adjust A2A1T3 for a 50-mc sine wave with a maximum amplitude.

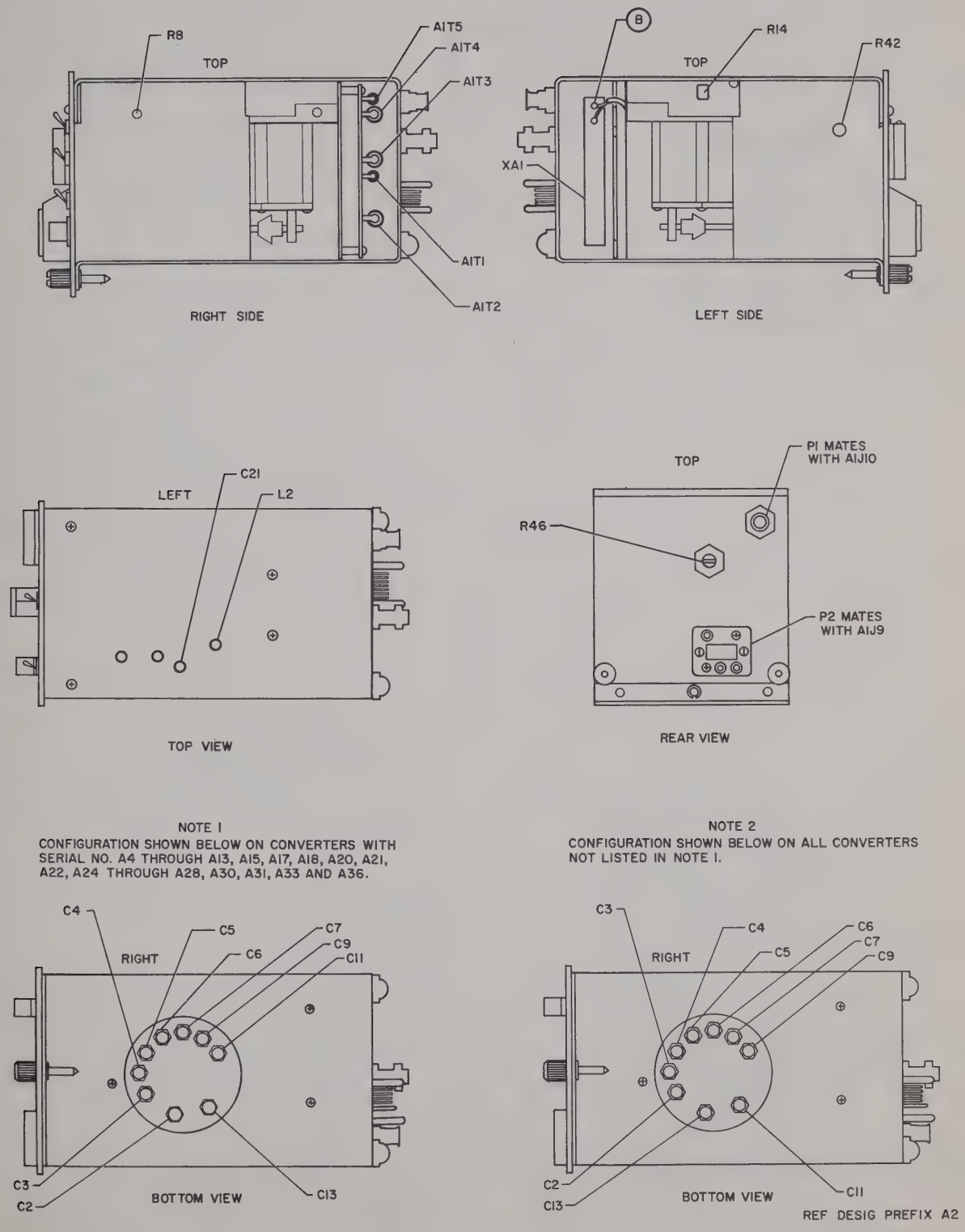

Figure 5-4. Electronic Frequency Converter A2, Location of Adjustments and Test Points

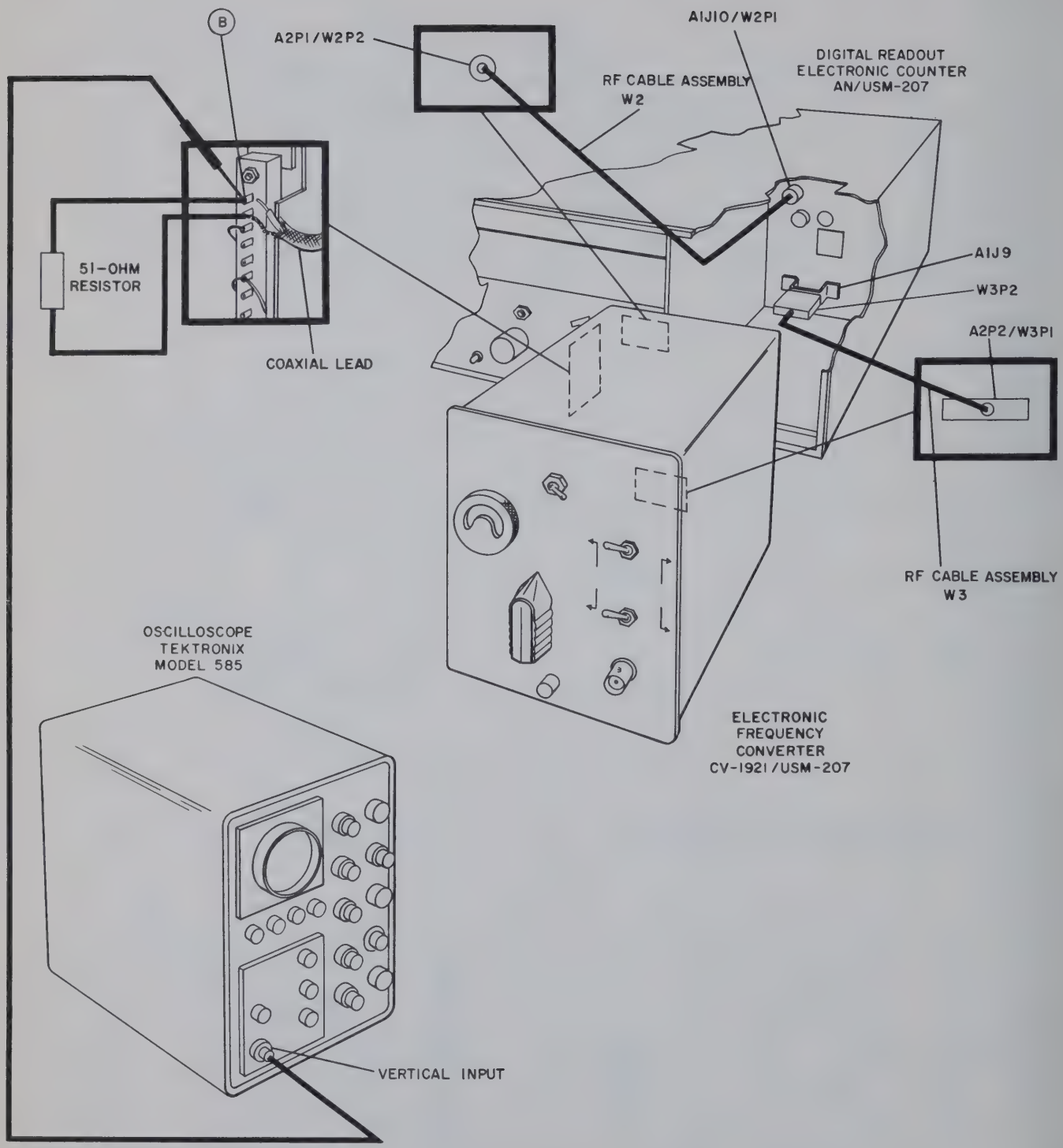

Figure 5-5. Frequency Multiplier A2A1 Adjustment, Test Setup

(k) Adjust A2A1T2 for a 50-mc sine wave with a maximum amplitude.

(l) Adjust A2A1T1 for a 50-mc sine wave with a maximum amplitude.

(m) Adjust A2R46 (figure 5-4) for a 3-cm vertical wave-form-deflection.

(n) Set POWER switch to OFF.

(o) Disconnect resistor connected in step (c) and resolder the coaxial lead to test point B.

(5) INSTRUCTIONS FOR ADJUSTING THE HARMONIC GENERATOR AND CAVITY.

(a) Connect test setup as shown in figure 5-6. Connect uhf signal generator first, and leave the vhf signal generator and rf millivoltmeter disconnected.

(b) Set mixing frequency selector switch to 500, both converter attenuator switches to the left, and DIRECT-HETERODYNE switch to HETERODYNE.

(c) Set uhf signal generator output frequency for 490 mc, output level for approximately 100 mv rms, function switch to cw, PULSE switch to +, and modulation switch to NORMAL.

(d) Set oscilloscope controls for a vertical deflection of 0.1 v/cm, a sweep rate of 0.1 us/cm, and internal triggering.

(e) While observing waveform on oscilloscope, adjust band 500 adjustment capacitor A2C2 (figure 5-4), for a maximum 10-mc output. The waveform will be clipped.

(f) Reduce output level of uhf signal generator to a point where waveform is no longer clipped; then readjust A2C2 for a maximum 10-mc output.

(g) Adjust matching adjustment coil A2L2 for a maximum 10-mc output.

(h) Connect the rf millivoltmeter as shown in figure 5-6 and set its RANGE switch to 0.03.

(i) Adjust matching adjustment capacitor A2C21 for minimum noise level as indicated on the rf millivoltmeter. When properly adjusted, noise level should be less than 20 millivolts.

(j) Disconnect the rf millivoltmeter.

(k) Set mixing frequency selector switch to 450.

(l) Set output frequency of uhf signal generator for 460 mc, and output level for 100 millivolts.

(m) While observing waveform on oscilloscope, adjust band 450 adjustment capacitor A2C3 for a maximum 10-mc output. The waveform will be clipped.

(n) Reduce output level of uhf signal generator, as required, to eliminate clipping; then readjust A2C3 for a maximum 10-mc output.

(o) Set mixing frequency selector switch to 400.

(p) Disconnect uhf signal generator and replace it with the vhf signal generator.

(q) Set FREQUENCY RANGE switch of vhf signal generator to E, FINE FREQ ADJUST switch to the marker, FREQUENCY control for a 410-mc output, MOD SELECTOR switch to CW, and attenuator control fully counterclockwise.

(r) Adjust AMP TRIMMER control of vhf signal generator for a maximum reading on the OUTPUT VOLTS meter; then set OUTPUT LEVEL control for a reading on the set level (red arrow) of the OUTPUT VOLTS meter, and set attenuator control for 100 millivolts.

(s) While observing waveform on oscilloscope, adjust band 400 adjustment capacitor A2C4 for a maximum 10-mc output. The waveform will be clipped.

(t) Turn attenuator control of vhf signal generator counterclockwise to a point where waveform is no longer clipped; then readjust A2C4 for a maximum 10-mc output.

(u) Set mixing frequency selector switch to 350.

(v) Set output frequency of vhf signal generator for 360 mc. Leave other controls of vhf signal generator as in step (q).

(w) Repeat the procedure of step (r).

(x) While observing waveform on oscilloscope, adjust band 350 adjustment capacitor A2C5 for a maximum 10-mc output. The waveform will be clipped.

(y) Reduce output level of vhf signal generator as in step (t); then readjust A2C5 for a maximum 10-mc output.

(z) Set mixing frequency selector switch to 300.

(aa) Set output frequency of vhf signal generator for 310 mc. Leave other controls of vhf signal generator as in step (q).

(ab) Repeat the procedure of step (r).

(ac) While observing waveform on oscilloscope, adjust band 300 adjustment capacitor A2C6, for a maximum 10-mc output. The waveform will be clipped.

(ad) Reduce output level of vhf signal generator as in step (t); then readjust A2C6 for a maximum 10-mc output.

(ae) Set mixing frequency selector switch to 250.

(af) Set output frequency of vhf signal generator for 260 mc. Leave other controls of vhf signal generator as in step (q).

(ag) Repeat the procedure of step (r).

(ah) While observing waveform on oscilloscope, adjust band 250 adjustment capacitor A2C7 for a maximum 10-mc output. The waveform will be clipped.

(ai) Reduce output level of vhf signal generator as in step (t); then readjust A2C7 for a maximum 10-mc output.

(aj) Set mixing frequency selector switch to 200.

(ak) Set FREQUENCY RANGE switch of vhf signal generator to D, and set output frequency for 210 mc. Leave other controls of vhf signal generator as in step (q).

(al) Repeat the procedure of step (r).

(am) While observing waveform on oscilloscope, adjust band 200 adjustment capacitor A2C9 for a maximum 10-mc output. The waveform will be clipped.

(an) Reduce output level of vhf signal generator as in step (t); then readjust A2C9 for a maximum 10-mc output.

(ao) Set mixing frequency selector switch to 150.

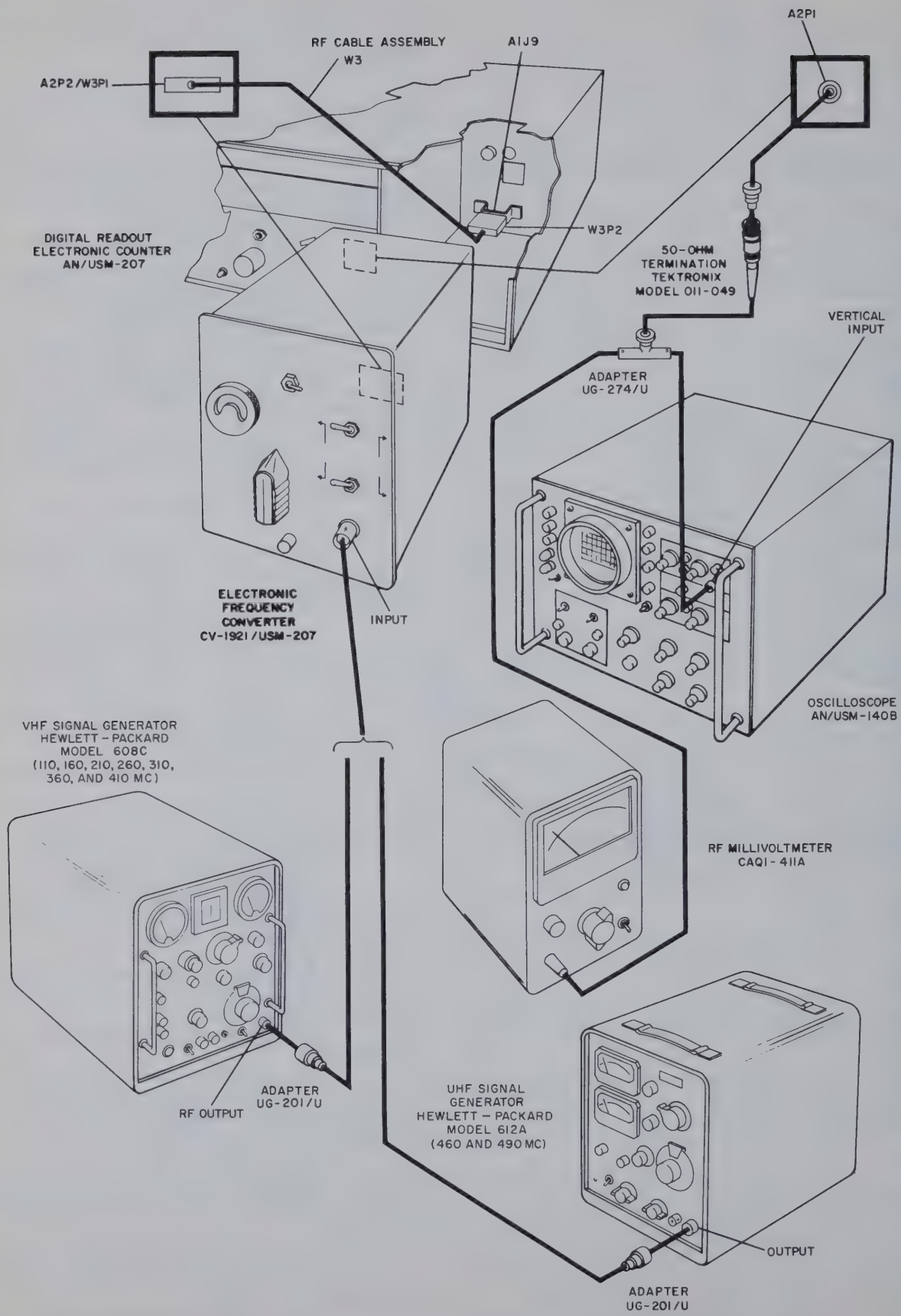

Figure 5-6. Harmonic Generator and Cavity, Test Setup

(ap) Set output frequency of vhf signal generator for 160 mc. Leave other controls of vhf signal generator as in step (ak).

(aq) Repeat the procedure of step (r).

(ar) While observing waveform on oscilloscope, adjust band 150 adjustment capacitor A2C11 for a maximum 10-mc output. The waveform will be clipped.

(as) Reduce output level of vhf signal generator as in step (t); then readjust A2C11 for a maximum 10-mc output.

(at) Set mixing frequency selector switch to 100.

(au) Set output frequency of vhf signal generator for 110 mc. Leave other controls of vhf signal generator as in step (ak).

(av) Repeat the procedure of step (r).

(aw) While observing waveform on oscilloscope, adjust band 100 adjustment capacitor A2C13 for a maximum 10-mc output. The waveform will be clipped.

(ax) Reduce output level of vhf signal generator as in step (t); then readjust A2C13 for a maximum 10-mc output.

(ay) Connect the rf millivoltmeter as shown in figure 5-6, and set its RANGE switch to 0.3.

(az) Adjust attenuator control of the vhf signal generator for a 100-millivolt reading on the rf millivoltmeter. Observe the setting of the attenuator control. If more than 10 millivolts, reduce it accordingly.

(ba) Adjust the bias adjustment resistor A2R8 for a peak reading on the rf millivoltmeter. Note the value of this reading.

(bb) Set the mixing frequency selector switch to 250.

(bc) Set the FREQUENCY RANGE switch of the vhf signal generator to E, and set the output frequency for 260 mc. Peak the AMP. TRIMMER control; then set the OUTPUT LEVEL control to the set level of the OUTPUT VOLTS meter. Do not change the setting of the attentuator control.

(bd) Observe the reading on the rf millivoltmeter, and compare it with the reading obtained in step (ba). If the two readings are within 10 percent of each other, no further adjustments are necessary and the procedure is complete. If the reading in this step is less by more than 10 percent, proceed to step (be).

(be) Adjust the bias adjustment resistor A2R8 for a reading approximately halfway between the difference of the two readings.

(bf) Set the mixing frequency selector switch to 100.

(bg) Set the FREQUENCY RANGE switch of the vhf signal generator to D, and set the output frequency for 110 mc. Peak the AMP. TRIMMER control; then set the OUTPUT LEVEL control to the set level of the OUTPUT VOLTS meter. Do not change the setting of the attenuator control.

(bh) Observe the reading on the rf millivoltmeter and compare it with the reading obtained in step (be). If the two readings are within 10 percent of each other, no further adjustments are necessary and the procedure is complete. Otherwise, proceed to step (bi).

(bi) Adjust the bias adjustment resistor A2R8 for a reading approximately halfway between the difference of the two readings.

(bj) Repeat the procedure of steps (bb) through (bi) as many times as necessary until the readings on band 100 and band 250 are within 10 percent of each other.

(6) BALANCING THE MIXER. The mixer is adjusted for minimum noise on all channels according to the following procedure:

(a) Set POWER switch to OFF.

(b) Loosen the thumbscrew on the bottom center of the converter.

(c) Slide the converter toward the front and out of the counter chassis, and set on a work bench near the counter.

(d) Connect W3P1 connector of rf cable assembly W3 to A2P2 of the converter; connect W3P2 connector of rf cable assembly W2 to A1J9 of the counter (figures 5-36 and 5-51).

(e) Connect 50-ohm termination, Tektronix Model 011-049, to A2P1 of the converter (see figure 5-6).

(f) Connect rf millivoltmeter, Hewlett-Packard Model 411A or equivalent, to the 50-ohm termination.

(g) Set POWER switch to STORE.

(h) Set DIRECT-HETERODYNE switch to HETERODYNE.

(i) Set RANGE switch of rf millivoltmeter to 0.03.

(j) Observe the rf millivoltmeter reading in each position of the mixing frequency selector switch; note the switch position where the reading is the highest and set it to that position.

(k) Adjust the balance adjustment resistor A2R14 (figure 5-4) for a minimum reading on the rf millivoltmeter.

(l) Repeat the procedure of step (j).

(m) Compare the results of step (j) with step (l). If the switch position with the highest reading is the same in steps (j) and (l), the adjustment is complete. Otherwise, proceed to step (n).

(n) Repeat the procedure of steps (j) through (m) as many times as necessary to obtain the correct results. When the mixer is properly balanced, the noise level reading in any position of mixing frequency selector switch is less then 20 millivolts.

(7) CALIBRATING THE LEVEL METER A2M1.

(a) Set counter POWER switch to OFF.

(b) Connect test setup as shown in figure (5-7).

(c) Set DIRECT HETERODYNE switch to DIRECT.

(d) Set both converter attenuator switches to the right.

(e) Set vhf signal generator for a 100-mc output frequency.

(f) Set vhf-signal-generator OUTPUT LEVEL control to mid-range, and attenuator fully clockwise (maximum attenuation).

(g) Set rf millivoltmeter RANGE switch to 0.3.

(h) Set counter POWER switch to TRACK.

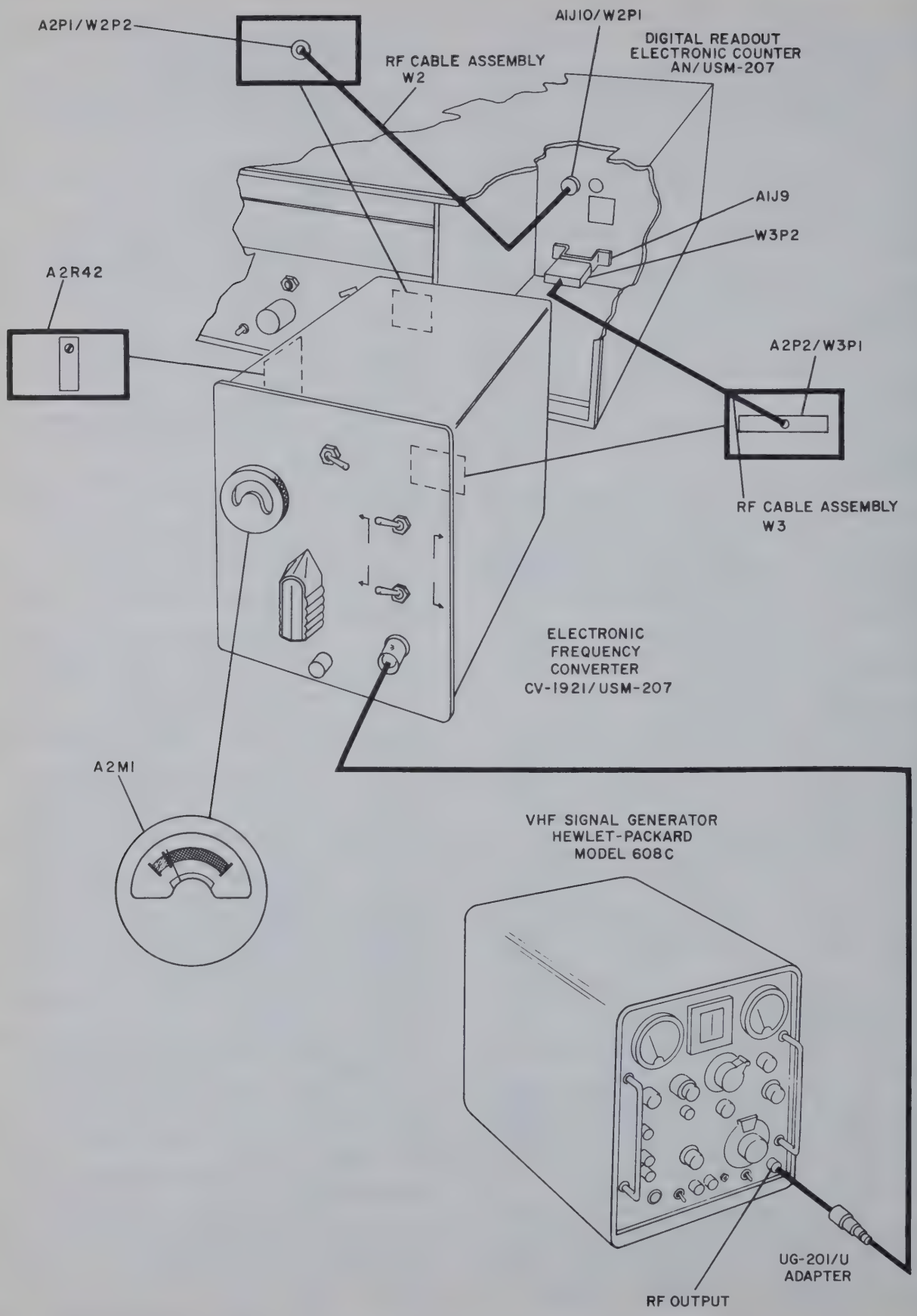

Figure 5-7. Level Meter A2M1 Calibration, Test Setup

(i) Set both converter attenuator switches to the left.

(j) Adjust attenuator of vhf signal generator for a 100-millivolt reading on the rf millivoltmeter.

(k) Observe indication on LEVEL METER. Adjust resistor A2R42 (figure 5-4) until needle reads at the low-end of the green zone near the border marker.

(l) Set vhf-signal-generator output frequency to 50 mc, 20 mc, 10 mc, and 5 mc. At each frequency, adjust attenuator vhf signal generator for a 100-millivolt reading on the rf millivoltmeter and observe LEVEL METER indication. If necessary, readjust resistor A2R42 until, at each of the above frequencies, LEVEL METER reading is as in step (k).

5-4A. REMOVAL OF TOP AND BOTTOM COVERS.

When replacing parts of the counter, first remove the top and bottom covers as follows:

a. Set POWER switch to OFF.

b. If panel protectors are installed, proceed to step c. If panel protectors are not installed, remove the 16 pan-head screws and four flat-head screws from each side of the counter and proceed to step e.

c. Remove left and right panel protectors. Each is fastened on by 16 pan-head screws.

Note

Do not install these screws temporarily in the mounting holes while the panel protectors are removed.

d. When panel protectors are removed, four additional screws are exposed on each side. Remove all eight screws.

e. Remove the 11 screws on top. Note that the two at the front center are flat-head screws, and that the four screws on the right side are shorter than the others.

f. Lift top cover up and away.

g. Set the counter upright with the front facing up and the bottom cover to the front.

h. Remove the 11 screws on the bottom.

i. Slide the bottom cover forward and off the counter.

j. To replace the top and bottom covers, perform steps a through g in a reverse order.

5-5. REPLACEMENT. (See figure 5-33).

a. PRINTED-CIRCUIT BOARDS A1A2 THROUGH A1A7, A1A9, and A1A10. —

(1) Set POWER switch to OFF.

(2) For A1A9 or A1A10, remove the two screws and shield that fit over these boards.

(3) Insert board-extractor hooks into the two holes at the top of the board to be removed.

(4) Note orientation of printed-circuit board.

(5) Grasp the board-extractor handle firmly and pull up with a slow, even pressure.

(6) Orient replacement board per step (4).

(7) Insert replacement board evenly within each guide channel, then push it down with a slow, even pressure into its socket.

(8) For A1A9 or A1A10, replace the shield and secure with the two screws.

b. PRINTED-CIRCUIT BOARD A1A1. —

(1) Set POWER switch to OFF.

(2) Remove the two screws that secure the heat sink of A1A1 to chassis.

(3) Perform the procedure of steps (2) through (6) of paragraph 5-5a.

(4) Secure the heat sink with the two screws removed in step (2).

c. PRINTED-CIRCUIT BOARDS A1A12 THROUGH A1A19 (figure 5-33). — Printed-circuit boards A1A12 through A1A19 are secured at the top by means of a tiedown bracket. When replacing any one of these boards, first remove the two screws that fasten the tiedown bracket and remove the tiedown bracket. Next, replace the applicable board as in paragraph 5-5a, then replace the tiedown bracket.

d. PRINTED-CIRCUIT BOARD A1A8. —

(1) Set POWER switch to OFF.

(2) Using an open-end wrench, loosen the fastening nut on the coaxial-cable connector and disconnect the coaxial cable from the board.

(3) Replace board by following the procedure of paragraph 5-5a.

(4) Connect coaxial cable to the board and secure with the open-end wrench.

e. PRINTED-CIRCUIT BOARD A1A11. —

(1) Set POWER switch to OFF.

(2) Remove printed-circuit board A1A12 per paragraph 5-5c.

(3) Using an open-end wrench, loosen the fastening nuts on the two coaxial-cable connectors, and disconnect the coaxial cables.

(4) Replace A1A11 per paragraph 5-5c.

(5) Connect the two coaxial cables to the board and secure with the open-end wrench.

(6) Reinsert printed-circuit board A1A12 per paragraph 5-5c.

f. REPLACEMENT OF PARTS ON PRINTED-CIRCUIT BOARDS. — To replace a part on a printed-circuit board, cut the leads of the defective part near the lead hole. Use a low-power soldering iron (50 watts maximum), and apply heat sparingly to the cut lead from the circuit side of the board. Slip the lead from the board as soon as the solder melts. Use a toothpick to clean the solder from the lead hole. Clean the board with isopropyl alcohol to Specification TT-I-735. Bend the tinned leads of the replacement part and insert in the cleaned holes; allow the leads to extend approximately 1/16 of an inch beyond the circuit side of the board. Solder leads from both sides of the board. Use resin-core solder type 63-37 (preferred) or 60-40 with a maximum diameter of 1/16 inch to Specification QQ-S-571 with flux to MIL-F-14526. If the replacement part is a transistor or a diode, use a heat sink, such as a pair of long-nosed pliers, between the part and the soldering iron. Transistors are mounted on insulated spacers that provide added support to the leads. When replacing a transistor, save the spacer of the defective transistor and place it on the replacement transistor. Printed-circuit board A1A9 contains terminal studs which mount one or more electrical parts. When a terminal stud mounts more than one part, these parts are to be replaced as a group. For example when a terminal stud mounts four parts of which one is defective, the other three must also be replaced.

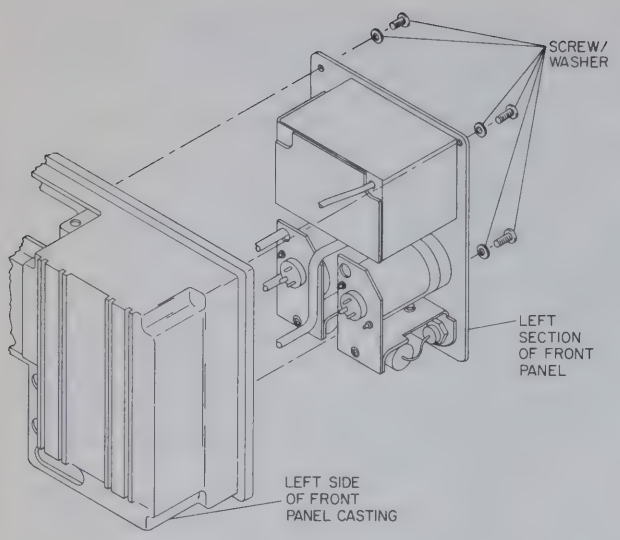

Figure 5-8. Left Section of Front Panel, Removal of Counter

g. ACCESS TO AF-RF AMPLIFIER A1A20, A CHANNEL VARIABLE ATTENUATOR A1A21, B AND C CHANNEL VARIABLE ATTENUATOR AND TRIGGER LEVEL CONTROLS A1A22 and A1A23, B AND C SLOPE SWITCHES A1S10, AND A1S12, MODE SELECTOR SWITCH A1S9, AND CONNECTORS A1J1, A1J2, A1J3, A1J4, AND A1J5. — These attenuator assemblies and parts are mounted on the left section of the front panel, and become accessible when the left section of the front panel is removed from the chassis (figure 5-8). To remove the left section of the front panel, remove the three screws (one at the bottom and two at the top), then slide it slowly forward and out of the chassis.

h. REPLACING AF-RF AMPLIFIER A1A20. —

Note

Steps (1) through (9) apply to AN/USM-207 counters with A1A21 part No. MP13-523. See steps (10) through (18) for counters with A1A21 part No. MP13-537.

(1) Perform the procedure of paragraph 5-5g to gain access to A1A20.

(2) Remove and save the two screws, washer and solder lug that mount A1A20 to its bracket MP23 (figure 5-9).

(3) Disconnect the coaxial lead and braid from the component side of A1A20. Code-mark coaxial cable to insure proper reassembly.

(4) Disconnect the red, white, and black leads and shield of the cable and teflon-sleeved bus wire from the circuit side of A1A20. Code-mark leads and save the three ferrite beads to insure proper reassembly.

(5) Orient replacement A1A20 such that the component side faces the bracket.

(6) Solder the red, white, and black leads and the shield of the cable and the teflon-sleeved bus wire to the points shown in figure 5-50 and as marked in step (4). Use resin-core solder type 63-37 (preferred) or 60-40 with a maximum diameter of 1/16 inch to Specification QQ-S-571 with flux to MIL-F-14526.

(7) Solder coaxial lead and shield to the circuit side of A1A20 as shown in figure 5-48 and as marked in steps (3) and (4).

(8) Remount A1A20 to its bracket MP23 with the two screws, washer and solder lug removed in step (2).

(9) Replace the left section of the front panel in the chassis, and secure with the three screws.

Note

Steps (10) through (18) apply to AN/USM-207 counters with A1A21 part No. MP13-537.

(10) Perform the procedure of paragraph 5-5g to gain access to A1A20.

(11) Remove and save the two screws, washer and solder lug that mount A1A20 to A1A21 (figure 5-9).

(12) Disconnect the coaxial lead and braid from the component side of A1A20. Code-mark coaxial cable to insure proper reassembly.

(13) Disconnect the red, white, and black leads and shield of the cable and teflon-sleeved bus wire from the circuit side of A1A20. Code-mark leads to insure proper reassembly.

(14) Orient replacement A1A20 such that the component side faces A1A21.

(15) Solder the red, white, and black leads and the shield of the cable and the teflon-sleeved bus wire to the points shown in figure 5-50 and as marked in step (13). Use resin-core solder type 63-37 (preferred) or 60–40 with a maximum diameter of 1/16 inch to Specification QQ-S-571 with flux to MIL-F-14526.

(16) Solder coaxial lead and shield to the circuit side of A1A20 as shown in figure 5-48 and as marked in steps (12) and (13).

(17) Remount A1A20 to A1A21 with the two screws, washer and solder lug removed in step (11).

(18) Replace the left section of the front panel in the chassis, and secure with the three screws.

i. REPLACING THE CHANNEL A VARIABLE ATTENUATOR A1A21. —

Note

Steps (1) through (16) apply to AN/USM-207 counters with A1A21 part No. MP13-523. See steps (17) through (43) for counters with A1A21 part No. MP13-537.

(1) Perform the procedure of paragraph 5-5g to gain access to A1A21.

(2) Unsolder the lead from connector A1J1 (figure 5-9). Remove and save the nut and lock washer that mount connector A1J1 and remove A1J1.

(3) Loosen the two setscrews on knob A1MP14 and remove the knob.

(4) Remove and save the mounting nut and washer that secure the shaft of A1A21 to the left section of the front panel.

(5) Remove and save the screw and washer that secure bracket A1MP23 to the left section of the front panel.

(6) Disconnect the external leads from A1A21 as follows (figure 5-10).

(a) White-black-brown, white-black-red, white-black-orange, and white-black-yellow from wafer C.

(b) Lead of capacitor A1A21C20 from A1J1.

(c) Teflon-sleeved bus wire from wafer A that connects to A1A20. Be sure that the three ferrite beads, E1 through E3, stay on the lead.

(7) Remove the bracket, slide the shaft of A1A21 toward the rear until it clears the left section of the front panel, then remove and discard the defective A1A21.

(8) Insert replacement A1A21 from the inside, with shaft through the mounting hole on the left section of the front panel. Be sure that positioning key is seated within the recess of the left section of the front panel. Do not mount.

(9) Place bracket over A1A21; allow the bolts at the rear of A1A21 to pass through the clearing holes of the bracket.

(10) Connect and solder leads removed in step (6) to the terminals of A1A21 as shown in figures 5-9 and 5-10.

(11) Place mounting nut and lock washer on shaft of A1A21, then tighten mounting nut.

(12) Replace knob A1MP14 on shaft, temporarily tighten one of the two setscrews, then turn to the extreme counterclockwise position.

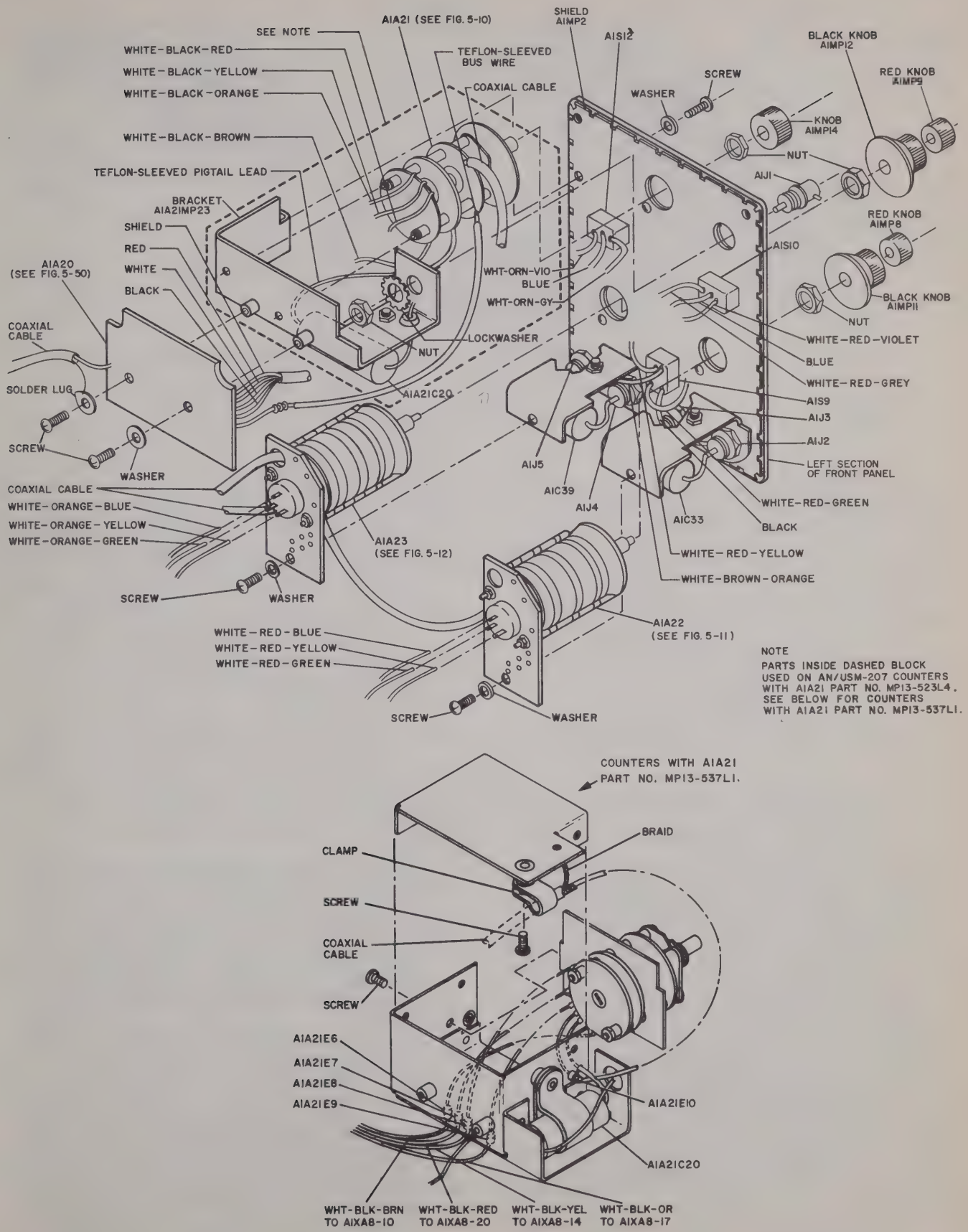

Figure 5-9. Left Section of Front Panel, Exploded View

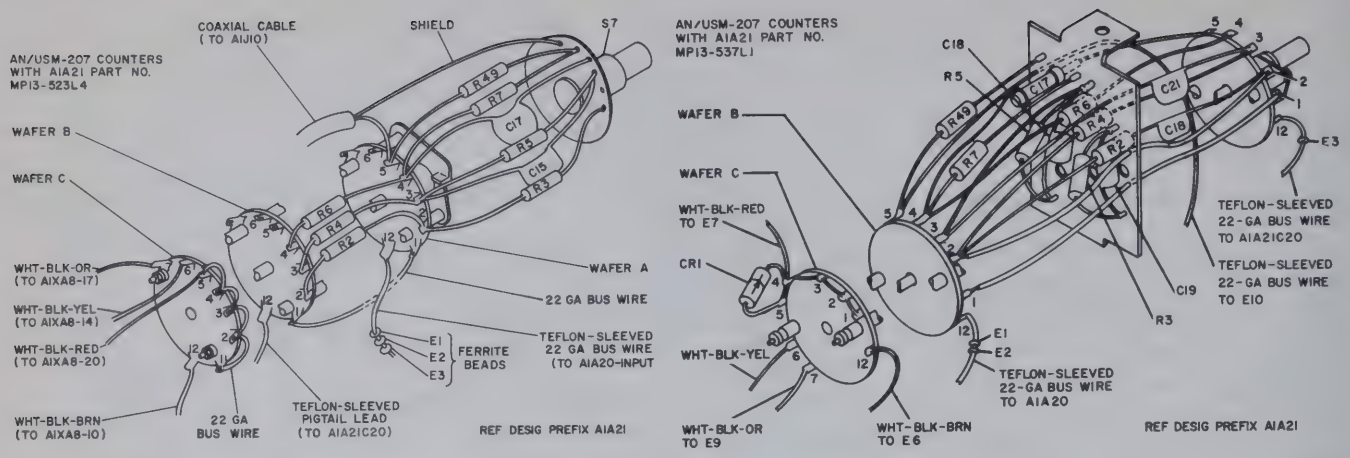

Figure 5-10. Channel A Variable Attenuator A1A21, Location of Parts on Switch

(13) Loosen the setscrew tightened in step (12), slide knob A1MP14 so that index point faces the . 1 V position, then tighten both setscrews.

(14) Secure the bracket to the left section of the front panel by means of the screw removed in step (5) and receptacle A1J1 removed in step (2).

(15) Solder the lead from capacitor A1A21C20 to receptacle A1J1.

(16) Replace the left section of the front panel in the chassis, and secure with the three screws.

Note

Steps (17) through (43) apply to AN/USM-207 counters with A1A21 part No. MP13-537L1.

(17) Perform the procedure of paragraph 5-5g to gain access to A1A21.

(18) Unsolder the lead of capacitor A1A21C20 from connector A1J1 (figure 5-9).

(19) Remove and save the nut and lock washer that mount connector A1J1, and remove A1J1.

(20) Loosen the two setscrews on knob A1MP14 and remove the knob.

(21) Remove and save the mounting nut and lock washer that secure the shaft of A1A21 to the left section of the front panel.

(22) Remove and save the screw and lock washer that secure the case of A1A21 to the left section of the front panel.

(23) Remove and save the two screws, washer, and solder lug that secure A1A21 to A1A20.

(24) Unsolder the teflon-sleeved lead that connects A1A21 to A1A20. Mark the connecting point on A1A20 to insure proper reassembly.

(25) Unsolder the white-black-brown, white-black-red, white-black-orange, and white-black-yellow leads from the bottom of A1A21. Code-mark leads to insure proper reassembly.

(26) Unsolder the coaxial cable from the feedthrough terminal.

(27) Remove and save the screw from the clamp that secures the coaxial cable to the cover of A1A21. Leave the clamp on the coaxial cable.

(28) Unsolder the braid of the coaxial cable from the solder lug on the cover of A1A21.

(29) Slide A1A21 towards the rear until its shaft clears the mounting hole in the front panel; then lift A1A21 up and out of the instrument.

(30) Insert replacement A1A21 from the top, with the shaft facing forward.

(31) Solder the teflon-sleeved lead to A1A20 as marked in step (24).

(32) Mount A1A21 to A1A20 by means of the two screws, washer, and solder lug removed in step (23).

(33) Raise the shaft slightly so that the connection points on the bottom of the case become accessible.

(34) Solder the white-black-yellow, white-black-orange, white-black-red, and white-black-brown leads to the connection points as noted in step (25).

(35) Solder the coaxial cable to the feedthrough terminal of the replacement A1A21.

(36) Solder the braid of the coaxial cable to the solder lug on the cover of A1A21; then secure the clamp with the screw removed in step (27).

(37) Slide shaft through mounting hole in front panel and secure by means of the lock washer and nut.

(38) Replace screw and lock washer removed in step (22).

(39) Replace connector A1J1 and secure with the lock washer and nut.

(40) Solder the free lead of capacitor A1A21C20 to A1J1.

(41) Replace knob A1MP14 on shaft, temporarily tighten one of the two setscrews; then turn to the extreme counterclockwise position.

(42) Loosen the setscrew tightened in step (41), turn knob so that index point faces the . 1 V position; then tighten both setscrews.

(43) Replace the left section of the front panel in the chassis, and secure with the three screws.

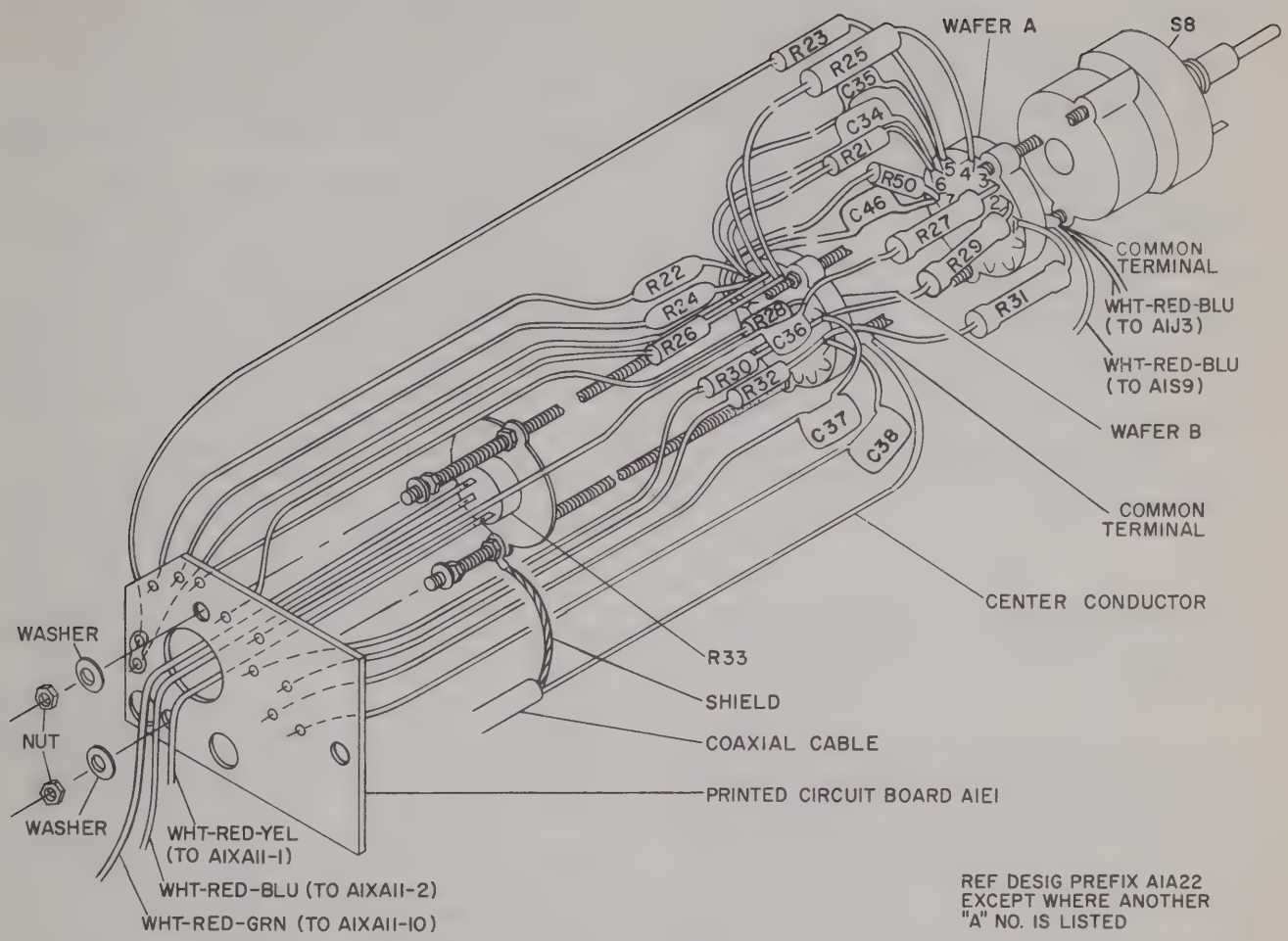

Figure 5-11. Channel B Variable Attenuator A1A22, Location of Parts and Connections

j. REPLACING THE B CHANNEL VARIABLE ATTENUATOR AND TRIGGER LEVEL CONTROL A1A22.—

(1) Perform the procedure of paragraph g to gain access to A1A22.

(2) Remove and save the screw and washer that mount A1A22 to its bracket (figure 5-9).

(3) Loosen the two setscrews on the red knob A1MP8 and remove the red knob.

(4) Loosen the two setscrews on the black knob of A1A22, A1MP11 and remove the black knob.

(5) Remove and save the nut and washer that secure the outer shaft of A1A22 to the left section of the front panel.

(6) Disconnect the white-red-yellow, white-red-green, and white-red-blue leads from the three terminals at the back of A1A22. Code-mark leads to insure proper reassembly, then slip these leads through the grommet of A1A22.

(7) Disconnect the center conductor of the coaxial cable from the common terminal of wafer B, the shield from the solder lug of the index plate, and the two white-red-blue leads from the common terminal of wafer A (figure 5-11). Code-mark leads to insure proper reassembly.

(8) Unsolder all connections at A1E1 from A1A22.

(9) Remove and discard defective A1A22.

(10) Insert replacement wafer assembly from the inside, with shaft through mounting hole in the left section of the front panel. Be sure that positioning key is seated within the recess in the left section of the front panel.

(11) Connect and solder the coaxial cable and the two white-red-blue leads removed in step (7) to the appropriate terminals of A1A22.

(12) Place mounting nut and lockwasher on outer shaft of replacement wafer assembly then tighten mounting nut.

(13) Assemble printed-circuit board A1E1 to the replacement wafer assembly as follows:

(a) Place printed-circuit board behind the wafer assembly; orient it so that the etched circuit is on the outside.

(b) Feed the free leads of the capacitors and resistors mounted on the wafer assembly through the adjacent solder holes of the printed-circuit board.

(c) Slide the printed-circuit board A1E1 toward the front panel until the rear portion of the wafer assembly passes through the clearance hole, and the two mounting bolts of the wafer assembly pass through the mounting holes.

(d) Using the screw and washer removed in step (2), mount the printed-circuit board A1E1 to its bracket.

(e) Place a mounting nut and lockwasher on the end of each mounting bolt, but do not tighten the mounting nuts.

Note

Following step (e), there will be two mounting nuts with washers at the end of each mounting bolt; one pair on the outside of the printed-circuit board, the other pair on the inside.

(f) Turn the inside mounting nuts first until they are flush against the inside of the printed-circuit board, then tighten the outside mounting nuts.

(g) Cut the free leads of the resistors and capacitors to a length extending approximately 1/16 of an inch from the etched circuit side of the board; solder each lead to the etched circuit side of the board. Use resin-core solder type 63-37 (preferred) or 60-40 with a maximum diameter of 1/16 of an inch to Specification QQ-S-571, with flux to MIL-F-14526.

(14) Pass the white-red-yellow, white-red-green, and white-red-blue leads removed in step (6) through the grommet of the printed-circuit board, then solder them to the appropriate terminals as marked in step (6).

(15) Replace black knob A1MP11 on the outer shaft and temporarily tighten one of the setscrews, then turn to the extreme clockwise position.

(16) Loosen the setscrew tightened in step (14), slide knob so that the .1 marking on the knob aligns with the 0 marking on the left section of the front panel, then tighten both setscrews.

(17) Turn inner shaft to the extreme counter-clockwise position.

(18) Place red knob A1MP8 on the inner shaft so that index point faces the -6 marking on the left section on the front panel, then tighten both setscrews.

(19) Replace the left section of the front panel in the chassis, and secure with the three screws.

k. REPLACING THE C CHANNEL VARIABLE ATTENUATOR AND TRIGGER LEVEL CONTROL A1A23.—

(1) Perform the procedure of paragraph g to gain access to A1A23.

(2) Remove and save the screw and washer that mount A1A23 to its bracket (figure 5-9).

(3) Loosen the two setscrews on the red knob A1MP9 and remove the red knob.

(4) Loosen the two setscrews on the black knob A1MP12 and remove the black knob.

(5) Remove and save the nut and washer that secure the outer shaft of A1A23 to the left section of the front panel.

(6) Disconnect the white-orange-yellow, white-orange-green, and white-orange-blue leads from the three terminals at the back of A1A23. Code-mark leads to insure proper reassembly.

(7) Disconnect the center conductor of one coaxial cable from the common terminal of wafer B, the shield from the solder lug of the index plate, and the white-red-yellow lead from the common terminal of wafer A (figure 5-12). Code-mark leads to insure proper reassembly.

(8) Disconnect the other coaxial cable and shield from wafer B of A1A22. Note that this coaxial cable is longer than the one disconnected in step (7). Code-mark this cable to insure proper reassembly.

(9) Slowly pull the two coaxial cables through the grommets until they clear printed-circuit board A1E2. Note the routing of these cables to insure proper reassembly.

(10) Unsolder all connections at A1E2 from A1A23.

(11) Insert replacement wafer assembly from the inside, with shaft through mounting hole in the left section of the front panel. Be sure that positioning lug is seated firmly within recess in the left section of the front panel.

(12) Feed the two coaxial cables through the grommets in printed-circuit board A1E2, and along the same route noted in step (9).

(13) Replace and solder the coaxial cable removed in step (8) to the appropriate terminals on wafer B of A1A22.

(14) Connect and solder the other coaxial cable and the white-red-yellow lead removed in step 7 to the appropriate terminals of A1A23.

(15) Place mounting nut and lockwasher on outer shaft of replacement wafer assembly, then tighten mounting nut.

(16) Assemble printed-circuit board A1E2 to the replacement assembly wafer. Use the same procedure as in step (13) of paragraph 5-5j.

(17) Solder the white-orange-yellow, white-orange-green, and white-orange-blue leads removed in step (6) to the appropriate terminals as marked in step (6).

(18) Replace black knob A1MP12 on the outer shaft and temporarily tighten one of the setscrews, then turn to the extreme clockwise position.

(19) Loosen the setscrew tightened in step (18), slide knob so that the .1 marking on the knob aligns with the 0 marking on the left section of the front panel, then tighten both setscrews.

(20) Turn inner shaft to the extreme counter-clockwise position.

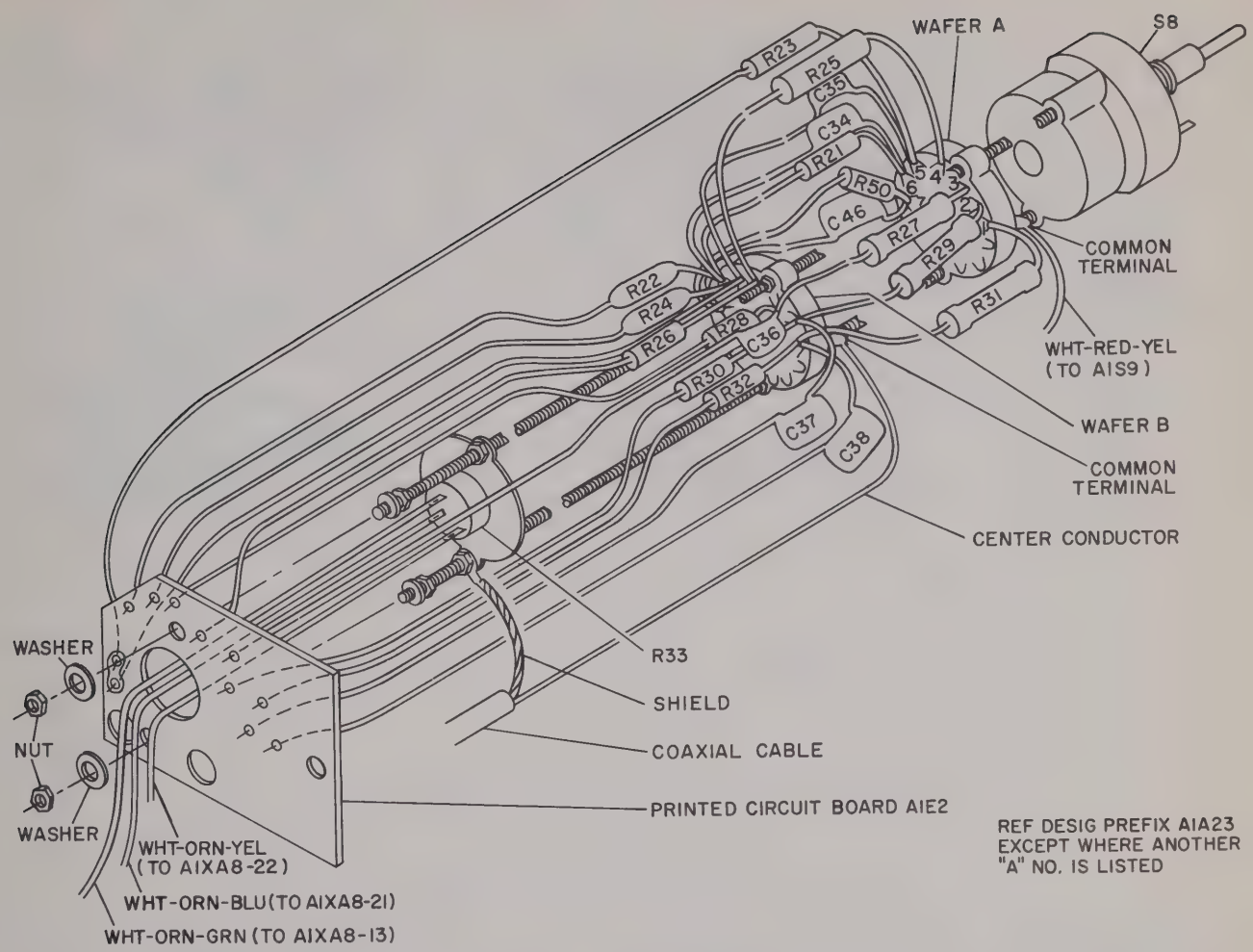

Figure 5-12. Channel C Variable Attenuator A1A23, Location of Parts and Connections

(21) Place red knob A1MP9 on the inner shaft so that the index point faces the -6 marking on the left section of the front panel, then tighten both setscrews.

(22) Replace the left section of the front panel in the chassis, and secure with the three screws.

l. ACCESS TO FUNCTION SWITCH A1S4, TIME BASE SWITCH A1S3, STD FREQ OUT SWITCH A1S2, AND POWER SWITCH A1S1. — These parts are mounted on the front panel, and become accessible when the front-panel casting is detached from the counter and is supported only by the wire harness. Refer to figure 5-13 and proceed as follows:

(1) Using the board extractor, lift printed-circuit board A1A11 partly out of its connector so that the cable fastenings become accessible. Unfasten and disconnect the two coaxial cables, then remove A1A11.

(2) Remove and save the two screws and washers on top of the tiedown bracket, and remove the tiedown bracket.

(3) Remove printed-circuit boards A1A10 and A1A12 through A1A16.

(4) Loosen the captive screw at the bottom center of electronic frequency converter A2, and slide A2 towards the front and out of the chassis.

(5) Remove and save the two screws (top and bottom) on the left side-panel which are nearest the front panel.

(6) Remove and save the two screws (top and bottom) on the right side-panel which are nearest the front panel.

(7) Remove and save the two screws on bottom front of the opening vacated by A2.

(8) Remove and save the two screws that secure the left side of the front-panel casting to the front card-guide bracket.

(9) Remove the two nuts and lockwashers that secure the bolts of A1S4 to the front card-guide bracket.

(10) Remove the two nuts and lockwashers that secure the bolts of A1A2, A1A3 to the front card-guide bracket.

(11) Pull the front-panel casting slightly forward until it is supported only by the wire harness, then pivot it down to expose the mounted parts. Place

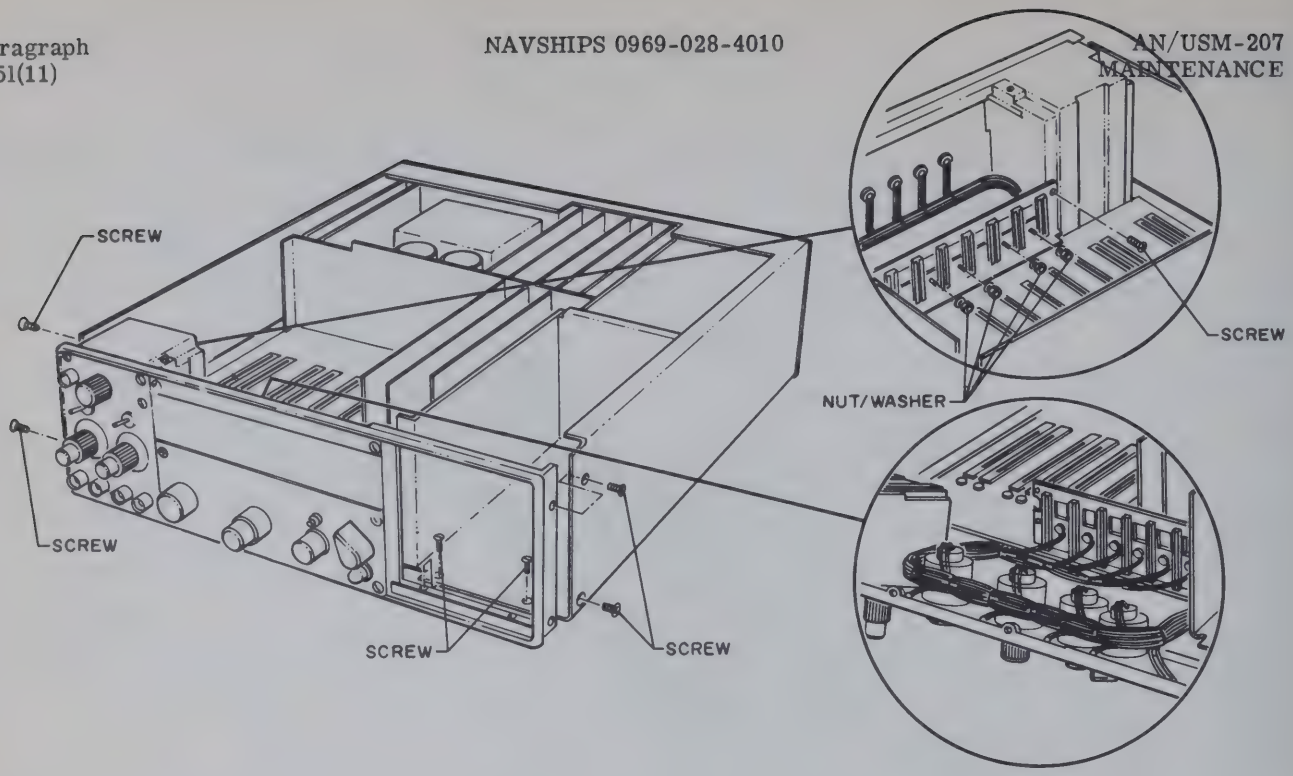

Figure 5-13. Counter, Disassembly of Front Section

a small block of wood or similar material under the bottom cover of the counter, so that the knobs mounted on the front panel do not rest on the work table.

m. REPLACING THE FUNCTION SWITCH A1S4.—

(1) Perform the procedure of paragraph 5-51 to gain access to the switch.

(2) Refer to figure 5-14 for wafer and terminal designations.

(3) Disconnect the external leads from the switch in the order listed in table 5-15. Code-mark leads to insure proper reassembly.

Note

To disconnect a lead, cut it as close to the switch terminal as possible. When all leads have been cut, and the defective switch has been removed, strip off approximately 3/16 of an inch of insulation from the leads before inserting replacement switch.

(4) Loosen the two setscrews on knob A1MP7 and remove the knob.

(5) Remove and save the front-panel mounting nut and flat washer.

(6) Remove and discard defective switch.

(7) Connect jumpers on replacement switch as listed in table 5-16.

(8) Insert replacement switch from the top, with shaft through mounting hole of front panel.

(9) Place flat washer and mounting nut on shaft and tighten finger-tight. Be sure that positioning key in front of switch is seated within recess of the front-panel casting.

(10) Connect and solder leads removed in step (3) to the replacement switch-terminals as listed in table 5-15, and in a reverse order.

(11) Tighten the front-panel mounting nut.

(12) Place knob on shaft, such that the setscrew opposite the index point is pointing towards the flat side of the shaft, then tighten the two setscrews.

(13) Using the procedure of paragraph 5-51 in a reverse order, replace the front-panel casting and printed-circuit boards, and secure all parts.

n. REPLACING THE TIME BASE SWITCH A1S3 AND STD FREQ OUT SWITCH A1S2. — These two parts are mounted on concentric shafts, and are replaced together according to the following procedure:

(1) Perform the procedure of paragraph 5-51 to gain access to A1S2/A1S3.

(2) Refer to figure 5-15 for wafer and terminal designations.

(3) Disconnect the external leads from A1S2/A1S3 in the order listed in table 5-17. Code-mark leads to insure proper reassembly.

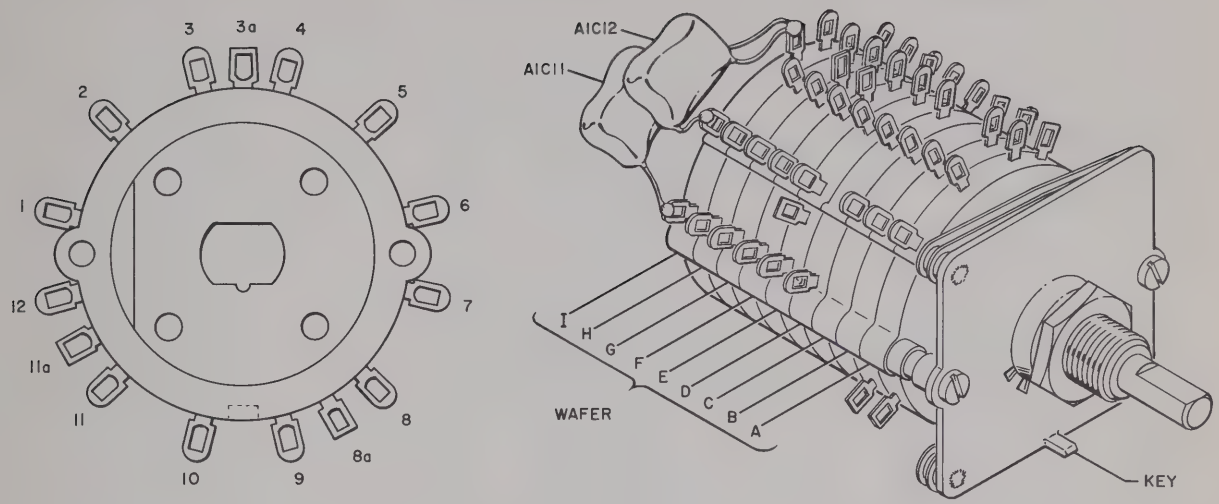

Figure 5-14. FUNCTION Switch A1S4, Wafer and Terminal Designations

TABLE 5-15. FUNCTION SWITCH A1S4, EXTERNAL WIRE CHART

COLOR AND GAUGE	ORIGIN OR DESTINATION	TERMINATION ON A1S4
White-green-blue 22-GA	A1XA10-9	I-1
White-green-violet 22-GA	A1XA8-9	I-2
Yellow 22-GA	A1S3/A1S2-C-7 rear	I-3a
White-yellow-grey 22-GA	A1XA8-11	I-12
White-yellow-violet 22-GA	A1XA8-12	I-11
White-yellow-blue 22-GA	A1XA8-10	I-10
White-yellow-green 22-GA	A1XA4-2	I-9
White-orange-grey 22-GA	A1XA4-1	I-8
White-orange-violet 22-GA	A1XA3-2	I-7
White-orange-blue 22-GA	A1XA3-1	I-6
White-orange-green 22-GA	A1XA2-2	I-5
White-orange-yellow 22-GA	A1XA10-8	I-4
White-orange 22-GA	A1XA7-B	H-3
White-brown 22-GA	A1XA7-A	H-1
White-red 22-GA	A1XA7-C	H-2
White-green 22-GA	A1XA7-2	H-5
White-blue 22-GA	A1XA7-3	H-6
White-black-blue 22-GA	A1S3/A1S2-B-1 front	H-5a
White-black-violet 22-GA	A1S3/A1S2-B-4 front	H-8a
White-yellow 22-GA	A1XA7-1	H-8
White-black-green 22-GA	A1S3/A1S2-B-11 front	G-3a
White-green 22-GA	A1DS5	G-5
White-brown-grey 22-GA	A1S3/A1S2-A-10 front	G-5a
White-black-yellow 22-GA	A1S3/A1S2-B-10 front	F-3a

TABLE 5-15. (Continued)

COLOR AND GAUGE	ORIGIN OR DESTINATION	TERMINATION ON A1S4
White-yellow 22-GA	A1DS4	F-4
White-brown-violet 22-GA	A1S3/A1S2-A-9 front	F-4a
White-black-orange 22-GA	A1S3/A1S2-B-9 front	E-1a
White-red 22-GA	A1DS8	E-2
White-brown-blue 22-GA	A1S3/A1S2-A-8 front	E-5a
White-brown 22-GA	A1DS9	D-1
White-black 22-GA	A1DS10	D-3
White-orange 22-GA	A1DS7	D-4
White-black-grey 22-GA	A1S3/A1S2-B-5 front	D-5a
White-brown-green 22-GA	A1S3/A1S2-A-7 front	D-8a
White-black-red 22-GA	A1S3/A1S2-B-8 front	D-10a
White-red-green 22-GA	A1S3/A1S2-B-9 rear	C-2
White-brown-yellow 22-GA	A1S3/A1S2-A-4 front	C-3
White-orange-green 22-GA	A1DS14	C-4a
White-black-brown 22-GA	A1S3/A1S2-B-7 front	C-5
White-orange-blue 22-GA	A1DS13	C-9a
White-red-grey 22-GA	A1S3/A1S2-B-12 rear	B-2
White-red-violet 22-GA	A1S3/A1S2-B-11 rear	B-3
White-red-blue 22-GA	A1S3/A1S2-B-10 rear	B-4
White-red-orange 22-GA	A1S3/A1S2-B-1 rear	B-11a
White-orange-violet 22-GA	A1DS12	B-9
White-green-violet 22-GA	A1S3/A1S2-A-9 rear	A-2
White-brown-orange 22-GA	A1S3/A1S2-A-2 front	A-3
White-green-blue 22-GA	A1S3/A1S2-A-4 rear	A-11a
White-orange-grey 22-GA	A1DS11	A-9
White-brown-red 22-GA	A1S3/A1S2-A-1 front	A-4
White-orange-yellow 22-GA	A1DS15	A-4a
White-red-yellow 22-GA	A1S3/A1S2-B-2 rear	A-6

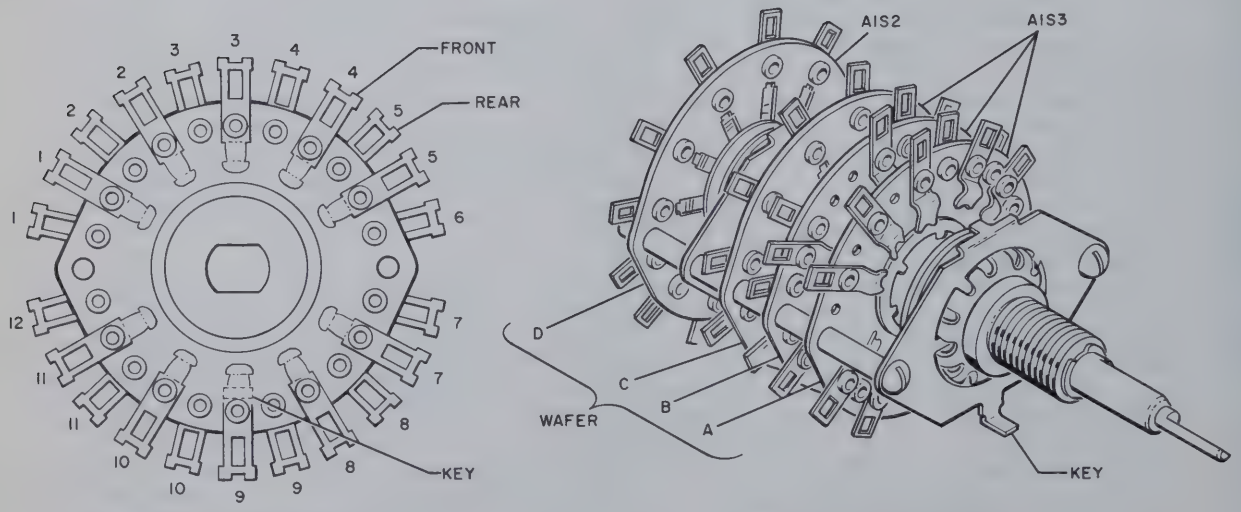

TERMINAL DESIGNATIONS OF TYPICAL WAFER

WAFER DESIGNATIONS

Figure 5-15. Time Base Switch A1S3 and STD FREQ OUT Switch A1S2, Wafer and Terminal Designations

TABLE 5-16. FUNCTION SWITCH, INTERNAL WIRE CHART

COLOR AND GAUGE	CONNECT
White-yellow 22-GA	From H-4 to H-8
Bus wire 22-GA	From H-4 through G-4 to F-4
Bus wire 22-GA	From H-5 to G-5
Bus wire 22-GA	From H-3 through G-3 through F-3 through E-3 to D-4
Bus wire 22-GA	From H-2 through G-2 through F-2 to E-2
Bus wire 22-GA	From H-1 through G-1 through F-1 through E-1 to D-1
White-brown 22-GA	From H-7 to F-6
White-brown 22-GA	From H-7 to E-10
Bus wire 22-GA	From E-10 to D-10
White-red 22-GA	From G-2 to F-5
White-black 22-GA	From G-6 to D-9
Bus wire 22-GA	From G-12 through F-12 through E-12 to D-12
White-red 22-GA	From F-11 to F-2
Bus wire 22-GA	From F-11 through D-11 to E-11
Bus wire 22-GA	From F-5 to E-5
White-brown 22-GA	From F-6 to E-4
White-brown 22-GA	From E-4 to E-1
White-black 22-GA	From E-12 to D-9
White-black 22-GA	From D-12 to D-3
White-red-green 22-GA	From C-8 to C-2
Bus wire 22-GA	From C-4a to B-4a
White-red-grey 22-GA	From B-8 to B-2
White-brown-red 22-GA	From A-4 to A-7
White-green-violet 22-GA	From A-8 to A-2

TABLE 5-17. TIME BASE/STD FREQ OUT SWITCH A1S3/A1S2, EXTERNAL WIRE CHART

COLOR AND GAUGE	ORIGIN OR DESTINATION	TERMINATION ON A1S3/A1S2
White-black-grey 22-GA	A1XA5-20	D-3 rear
White-black-violet 22-GA	A1XA5-2	D-2 rear
White-black-blue 22-GA	A1XA4-6	D-1 rear
White coaxial cable	A1XA6-2	D-4 rear
White coaxial cable	A1XA5-13	D-7 rear
White-black-brown 22-GA	A1XA2-5	D-8 rear
White-black-red 22-GA	A1XA2-6	D-9 rear
White-black-orange 22-GA	A1XA3-5	D-10 rear
White-black-yellow 22-GA	A1XA3-6	D-11 rear
White-black-green 22-GA	A1XA4-5	D-12 rear
White-blue 22-GA	A1XA16-21	C-1 rear
White-violet 22-GA	A1XA15-21	C-2 rear
White-grey 22-GA	A1XA14-21	C-3 rear
Brown 22-GA	A1XA13-21	C-4 rear
White-black 22-GA	A1XA12-21	C-5 rear
Yellow 22-GA	A1S4-I-3a	C-7 rear
White-brown 22-GA	A1XA2-4	C-8 rear
White-red 22-GA	A1XA2-3	C-9 rear
White-orange 22-GA	A1XA19-16	C-10 rear
White-yellow 22-GA	A1XA18-21	C-11 rear
White-green 22-GA	A1XA17-21	C-12 rear
White-black-grey 22-GA	A1S4-D-5a	B-5 front
White-black-violet 22-GA	A1S4-H-8a	B-4 front
White-black-blue 22-GA	A1S4-H-5a	B-1 front

TABLE 5-17. (Continued)

COLOR AND GAUGE	ORIGIN OR DESTINATION	TERMINATION ON A1S3/A1S2
White-red-orange 22-GA	A1S4-B-11a	B-1 rear
White-red-yellow 22-GA	A1S4-A-6	B-2 rear
White-black-brown 22-GA	A1S4-C-5	B-7 front
White-black-red 22-GA	A1S4-D-10a	B-8 front
White-red-green 22-GA	A1S4-C-2	B-9 rear
White-black-orange 22-GA	A1S4-E-1a	B-9 front
White-red-blue 22-GA	A1S4-B-4	B-10 rear
White-black-yellow 22-GA	A1S4-F-3a	B-10 front
White-red-violet 22-GA	A1S4-B-3	B-11 rear
White-black-green 22-GA	A1S4-G-3a	B-11 front
White-red-grey 22-GA	A1S4-B-2	B-12 rear
White-brown-yellow 22-GA	A1S4-C-3	A-4 front
White-green-blue 22-GA	A1S4-A-11a	A-4 rear
White-brown-orange 22-GA	A1S4-A-3	A-2 front
White-brown-red 22-GA	A1S4-A-4	A-1 front
White-brown-green 22-GA	A1S4-D-8a	A-7 front
White-brown-blue 22-GA	A1S4-E-5a	A-8 front
White-green-violet 22-GA	A1S4-A-2	A-9 rear
White-brown-violet 22-GA	A1S4-F-4a	A-9 front
White-brown-grey 22-GA	A1S4-G-5a	A-10 front

TABLE 5-18. TIME BASE/STD FREQ OUT SWITCH A1S3/A1S2, INTERNAL WIRE CHART

COLOR AND GAUGE	CONNECT
White-black-green 22-GA	From B-5 rear to B-11 front
White-red-yellow 22-GA	From B-2 rear to A-6 rear
Bus wire 22-GA	From B-4 rear to B-3 front
Black 22-GA	From B-3 front to A-5 rear
Bus wire 22-GA	From A-5 rear to A-3 front
Black 22-GA	From A-3 front to A-11 rear

COLOR AND GAUGE	CONNECT
White-brown-red 22-GA	From A-1 front to A-11 front
White-brown-red 22-GA	From A-11 front to A-7 rear
White-brown-orange 22-GA	From A-2 front to A-8 rear
Bus wire 22-GA	From A-4 front to A-5 front

Note

To disconnect a lead, cut it as close to the terminal as possible. When all leads have been cut, and the defective A1S2/A1S3 has been removed, strip off approximately 3/16 of an inch of insulation from the leads before inserting replacement.

(4) Loosen the two setscrews on red knob A1MP6 and remove the red knob.

(5) Loosen the two setscrews on black knob A1MP10, and remove the black knob.

(6) Remove and save the front-panel mounting nut and flat washer.

(7) Connect jumpers on replacement A1S2/A1S3 as listed in table 5-18.

(8) Insert replacement A1S2/A1S3 from top, with shaft through mounting hole on front panel.

(9) Place flat washer and mounting nut on outer shaft and tighten finger-tight. Be sure that positioning key on front of A1S2/A1S3 is seated within recess of the front-panel casting.

(10) Connect and solder leads removed in step (3) to the replacement A1S2/A1S3 terminals as listed in table 5-17, and in a reverse order.

(11) Tighten the front-panel mounting nut.

(12) Place the black knob on the outer shaft, such that the setscrew opposite the index mark is pointing towards the flat portion of the outer shaft, then tighten the two setscrews on the black knob.

(13) Place the red knob on the inner shaft, such that the setscrew opposite the index point is pointing towards the flat portion of the inner shaft, then tighten the two setscrews on the red knob.

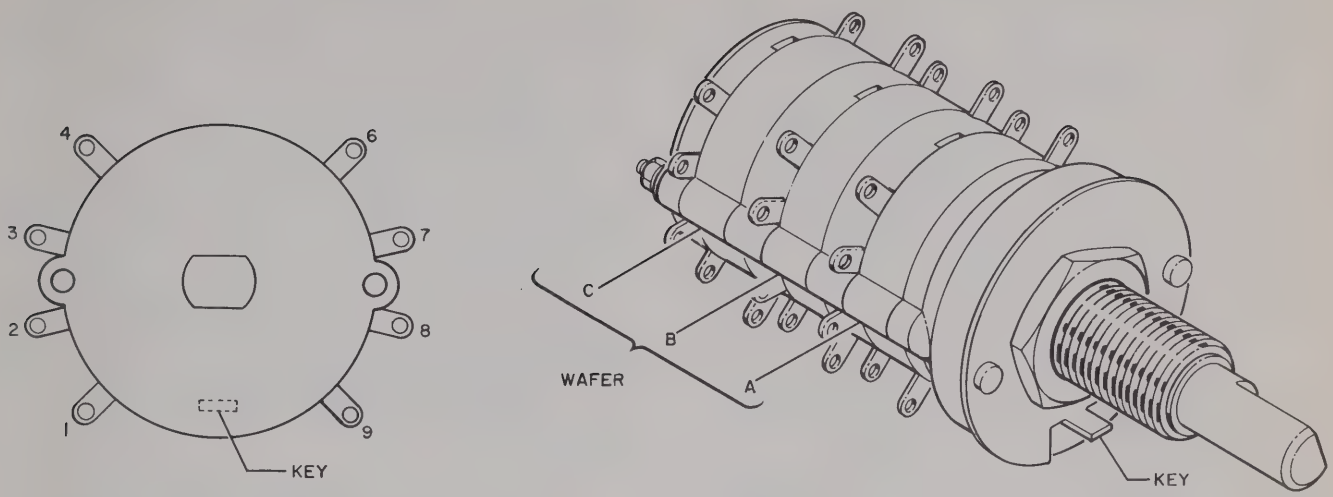

Figure 5-16. POWER Switch A1S1, Wafer and Terminal Designations

TABLE 5-19. POWER SWITCH A1S1, EXTERNAL WIRE CHART

COLOR AND GAUGE	ORIGIN OR DESTINATION	TERMINATION ON POWER SWITCH
Yellow 22-GA	A1C4	C-1 front
Yellow 22-GA	A1S3/A1S2-C7-R	C-1 front
White-yellow-violet 22-GA	A1XA7-V	C-3 rear
Blue 18-GA	A1F1 or A1F2	B-9 rear
Blue 18-GA	A1F2 or A1F1	B-4 rear
Grey 18-GA	A1FL1 line	B-6 front
Grey 18-GA	A1FL1 filter	B-1 front
Orange 18-GA	A1T1 term	A-9 rear
Orange 18-GA	A1T1 1 & 2	A-4 rear
Yellow 18-GA	A1F1 or A1F2	A-6 front
Yellow 22-GA	A1DS1	A-6 front
Yellow 18-GA	A1F2 or A1F1	A-1 front
Yellow 22-GA	A1DS1	A-1 front

(14) Using the procedure of paragraph 5-51, in a reverse order, replace the front-panel casting and printed-circuit boards and secure all parts.

o. REPLACING THE POWER SWITCH A1S1.—

(1) Perform the procedure of paragraph 5-51 to gain access to the switch.

(2) Refer to figure 5-16 for wafer and terminal designations.

(3) Disconnect the external leads in the order listed in table 5-19. Code-mark leads to insure proper reassembly.

Note

To disconnect a lead, cut it as close to the switch terminal as possible. When all leads have been cut, and the defective switch has been removed, strip off approximately 1/16 of an inch of insulation from the leads before inserting replacement switch.

(4) Loosen the two setscrews on knob A1MP5 and remove the knob.

TABLE 5-20. POWER SWITCH A1S1, INTERNAL WIRE CHART

COLOR AND GAUGE	CONNECT
Bus wire 18-GA	From B-7 rear through B-8 rear to B-9 rear
Bus wire 18-GA	From B-2 rear through B-3 rear to B-4 rear
Bus wire 18-GA	From A-8 rear to A-9 rear
Bus wire 18-GA	From A-3 rear to A-4 rear

(5) Remove and save the front-panel mounting nut and flat washer.

(6) Remove and discard the defective switch.

(7) Connect jumpers on replacement switch as listed in table 5-20.

(8) Insert replacement switch from top, with shaft through mounting hole on front panel.

(9) Place flat washer and mounting nut on shaft and tighten finger-tight. Be sure that positioning key on front of switch is seated within the recess of the front-panel casting.

(10) Connect and solder leads removed in step (3) to the replacement switch terminals as listed in table 5-19 and in a reverse order.

(11) Tighten the front-panel mounting nut.

(12) Place the knob on the shaft of the replacement switch, such that the setscrew opposite the pointed-end of the knob points towards the flat portion of the shaft, then tighten the two setscrews. Perform this procedure with the switch set to any position other than OFF, so that it clears the PUSH bar.

p. REPLACING THE UNITS ANNUNCIATOR LAMPS A1DS11 THROUGH A1DS15.—

(1) Remove and save the two screws, nuts, and washers that mount the annunciator housing to the inside of the front panel (figure 5-17). Save the bolts, nuts and washers.

(2) The annunciator lamps are mounted on terminal board A1TB1 behind the annunciator housing A1MP2. Separate the terminal board from the housing to expose the lamps. Remove and save the plastic annunciator window A1MP2.

(3) Using a low-power soldering iron (50 watts), unsolder the power lead associated with the defective lamp.

(4) Apply heat simultaneously to the terminal pair associated with the defective lamp, then slip the leads of the lamp through the terminal holes as soon as the solder melts. Use a toothpick to clean the softened solder from the terminal holes.

(5) Slip the leads of the replacement lamp through the terminal holes, then wrap the leads around the two terminals.

(6) Wrap the power lead around the power terminal, then solder the leads to both terminals.

(7) Insert the terminal board with the lamps within the housing, place annunciator window on the

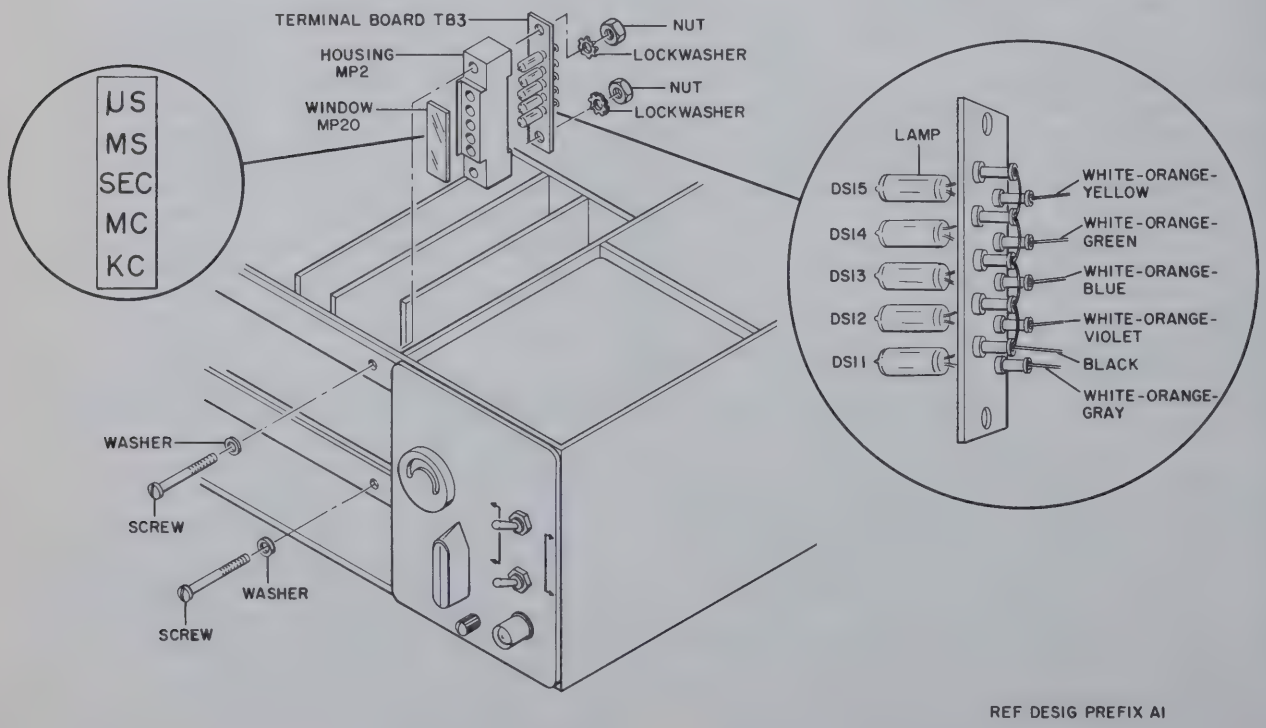

Figure 5-17. Annunciator Block, Exploded View

front side of the housing, then mount to the inside of the front panel against the readout window.

q. REPLACING THE DECIMAL POINT LAMPS A1DS4 THROUGH A1DS10.—

(1) Loosen and remove the two screws on top of the tiedown bracket, and remove the tiedown bracket.

(2) Remove the two printed-circuit boards nearest the defective decimal lamp.

(3) Using a low-power soldering iron (50 watts), unsolder the two leads from the terminals below the defective decimal lamp, and remove the teflon tubing from the leads. Save the teflon tubing.

(4) Remove the defective decimal lamp from its rubber grommet.

(5) Insert the replacement decimal lamp into the rubber grommet, place the teflon tubing on the two leads, and solder the leads to the terminals.

(6) Replace the printed circuit boards removed in step (2).

(7) Replace the tiedown bracket and fasten with the two screws.

r. ACCESS TO PARTS IN THE ELECTRONIC FREQUENCY CONVERTER A2.—Based on degree of accessibility, parts of the converter are divided into three groups as follows:

Group 1. Parts in this group can be replaced without disassembling the converter. Includes parts mounted on the front panel, parts mounted on the rear panel, and parts mounted at the rear portion of the converter.

Group 2. Parts in this group are accessible when the converter is disassembled to the extent that the front panel and cavity casting are separated from the converter chassis. Includes parts mounted on the top of the cavity casting.

Group 3. Parts in this group are accessible when the cavity casting is disassembled. Includes all parts inside the cavity casting.

s. SEPARATING FRONT PANEL AND CAVITY CASTING FROM CONVERTER CHASSIS.—

(1) Set counter POWER switch to OFF.

(2) Loosen the thumbscrew at the bottom of the converter, and slide the converter out of the counter.

(3) Remove and save the four screws and washers from the front panel (figure 5-18). Remove and save three screws that fasten plate A2MP35 and remove plate.

(4) Remove and save four screws from top of converter and grounding screw.

(5) Loosen nut that secures bracket to shaft; then push bracket up so that it is free to turn, and turn it away from the bottom of the chassis.

(6) Push bottom of chassis up and unhook thumbscrew.

(7) Remove and save the outside nut and washer of connector A2P1; then slide it out of its mounting hole so that the attached coaxial cable is free to move with the cavity casting.

(8) Separate the converter chassis from the front panel and cavity casting as follows: Swing the front panel slowly clockwise until the cavity casting is mechanically free of the converter chassis and connected only by the three leads. Do not disconnect these leads.

t. ACCESS TO PARTS IN THE CAVITY CASTING.—To gain access to parts inside the cavity casting, first perform the procedure of paragraph 5-5s. Next, remove and save the seven screws and washers from the cavity cover A2MP21 (figure 5-19); then lift the cavity casting up and away.

u. REPLACING THE MIXING FREQUENCY SELECTOR SWITCH A2S4.—

(1) Perform the procedure of paragraph 5-5t to gain access to the switch.

(2) Unsolder the finger contact assembly A2E5 from the defective switch; then slide the finger contact assembly off the nylon bevel gearshaft A2MP22 (figure 5-19).

(3) Unsolder all fixed-capacitor leads from the switch terminals; then unsolder the jumpers between the switch terminals and the adjacent trimmer capacitors (figure 5-20). Remove excess solder from the terminal tabs of the trimmer capacitors.

(4) Disassemble the cavity switch detent on the outside of the cavity cover A2MP21 as follows: Remove and save the nylon nut (A2MP18 and A2MP19) from each nylon screw (A2MP16 and A2MP17), lift the detent spring A2MP27 off one screw, the detent arm A2MP3 off the other screw, and the two spacers A2MP25 and A2MP26.

(5) Remove the two nylon screws and ceramic spacers A2MP14 and A2MP15 from the inside of the cavity cover A2MP21.

Note

Before proceeding with step (6), note the position of the key on the defective switch with respect to the trimmer capacitors. When installing replacement switch, be sure that its key is oriented the same way.

(6) Remove and discard the defective switch.

(7) Turn rotor of replacement switch to the position shown in figure 5-21.

(8) Slide replacement switch on the gearshaft A2MP22, with the key oriented the same way as noted following step (5).

(9) Place one ceramic spacer A2MP14 and two nylon washers A2MP10 and A2MP11 between the replacement switch and the inside of the cavity cover. Position the ceramic spacer so that it aligns with the mounting hole on the replacement switch.

(10) Feed one nylon screw A2MP16 through the replacement switch, washers, and spacer, and screw into the mounting hole of the cavity cover. Do not tighten the screw.

(11) Insert the other ceramic spacer, washers, and nylon screw as in steps (9) and (10), and tighten both screws.

(12) Place the finger contact assembly A2E5 over the switch, such that its contacts are facing away from the cavity cover and the gearshaft is passing through the clearance hole.

(13) Turn the finger contact assembly so that its solder hole is in line with terminal 2 of the replacement switch. Terminal 2 is the common terminal and longer than the others.

(14) Solder terminal 2 of the replacement switch to the outside of the solder hole of the finger contact assembly.

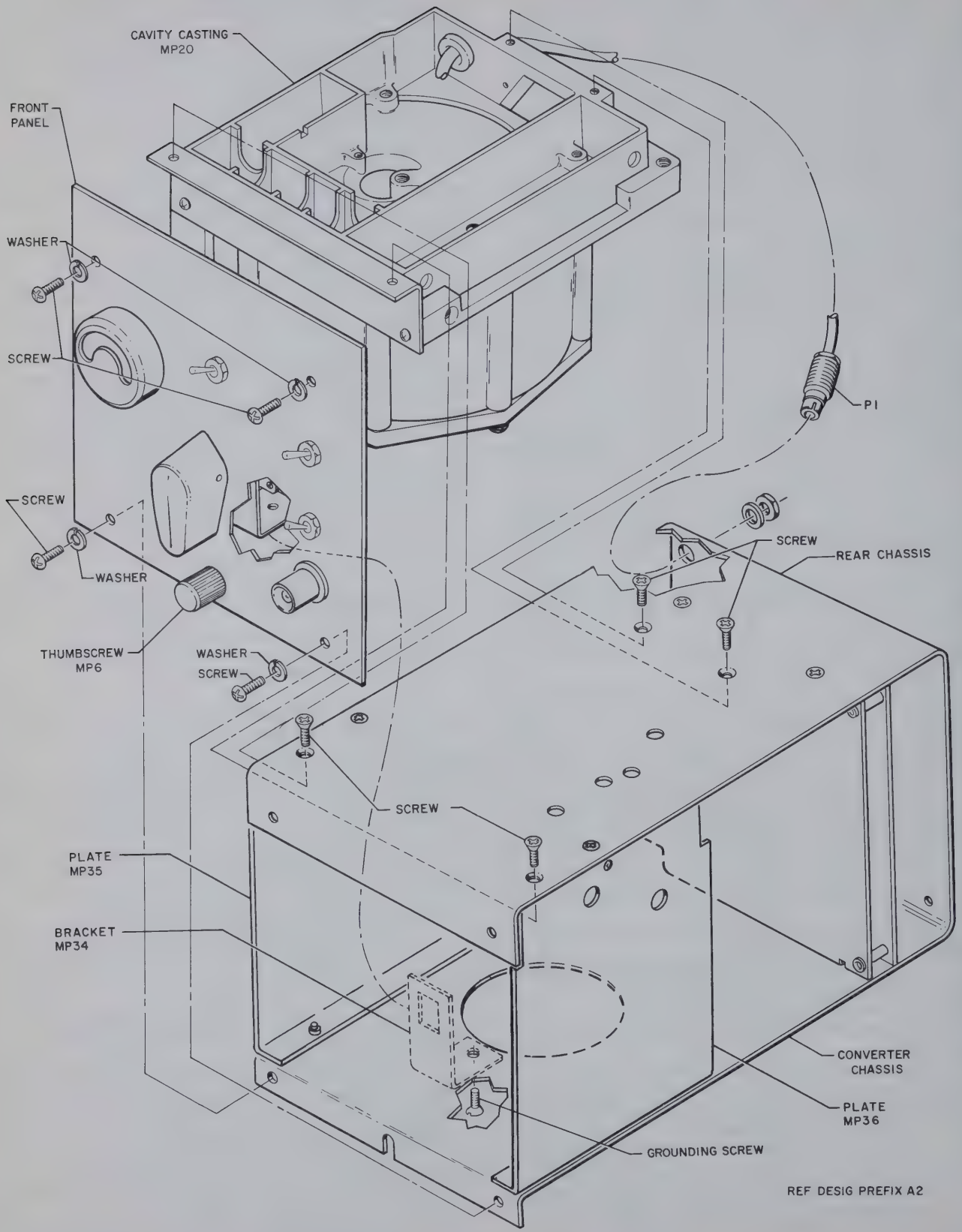

Figure 5-18. Electronic Frequency Converter A2 Exploded View, Front and Rear Chassis Separated

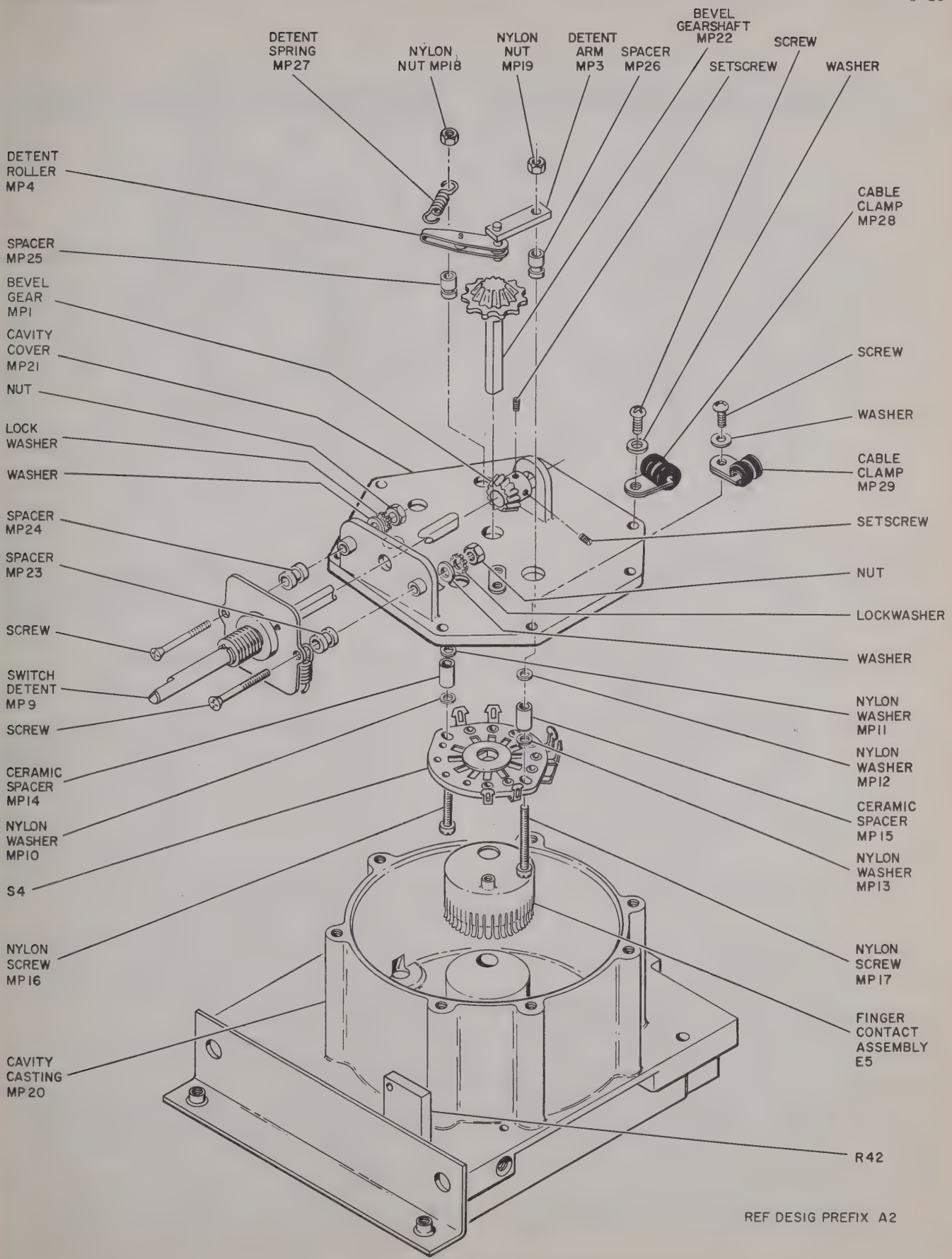

Figure 5-19. Cavity Casting, Exploded View

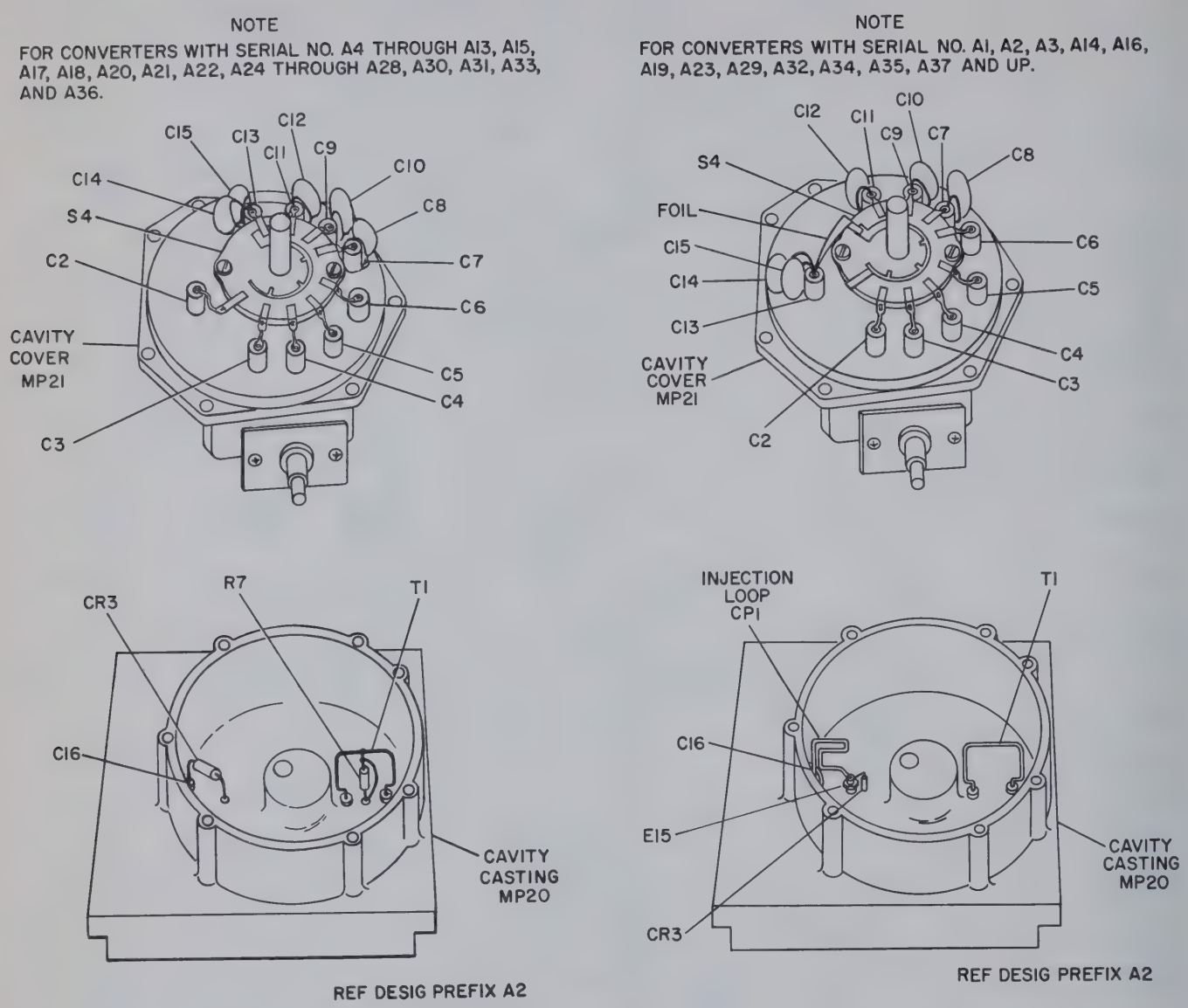

Figure 5-20. Electronic Frequency Converter A2, Cavity, Location of Parts

(15) Connect and solder a short 20-gauge jumper wire between terminal 2 of the replacement switch and the tab of capacitor A2C2.

(16) Connect and solder a short 20-gauge jumper wire between each remaining terminal of the replacement switch and the tab of the adjacent trimmer capacitor. As an alternate method, these remaining switch terminals may be soldered directly to the capacitor tabs without the use of jumper wires.

(17) Reassemble the cavity switch detent on the outside of the cavity cover and secure to the nylon screws.

v. REPLACING THE NYLON BEVEL GEAR-SHAFT A2MP22.—

(1) Perform the procedure of paragraph 5-5s.

(2) Set the mixing frequency selector switch to 100.

(3) Loosen the two setscrews on the knob MP7 and slide the knob off the shaft (figure 5-22).

(3A) Loosen the setscrew on collar A2MP37; then slide collar, spring washer A2MP39, and flat washer A2MP38 off the shaft.

(4) Slide the front panel slowly forward until it clears the shaft; then tilt it down to expose the switch detent A2MP9.

(5) Remove and save the two screws, spacers A2MP23 and A2MP24, nuts, and washers that fasten the switch detent to the cavity cover (figure 5-19).

(6) Loosen the two setscrews on the bevel gear A2MP1.

(7) Slide the switch detent forward and, at the same time, slide the bevel gear toward the rear, until the shaft clears the top of the nylon bevel gear-shaft. As the bevel gear comes loose set it aside.

NOTE

FOR CONVERTERS WITH SERIAL NO. A4 THROUGH A13, A15, A17, A18, A20, A21, A22, A24 THROUGH A28, A30, A31, A33, AND A36.

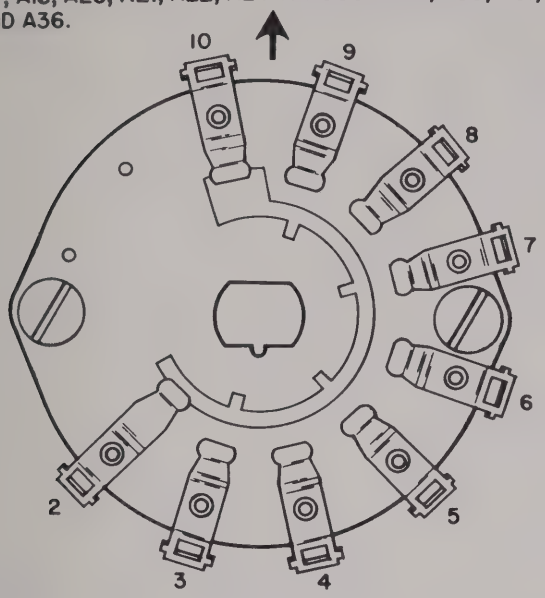

NOTE

VIEWED FROM INSIDE OF CAVITY COVER, WITH ARROW POINTING TOWARDS REAR AND ROTOR ORIENTED IN 100 POSITION.

NOTE

FOR CONVERTERS WITH SERIAL NO. A1, A2, A3, A14, A16, A19, A23, A29, A32, A34, A35, A37 AND UP.

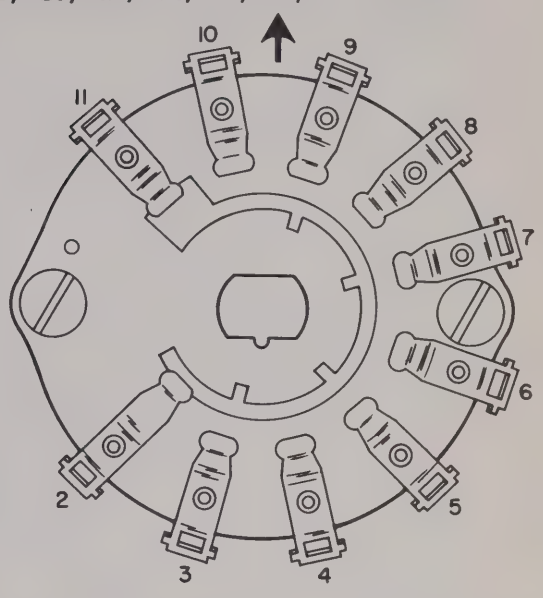

NOTE

VIEWED FROM INSIDE OF CAVITY COVER, WITH ARROW POINTING TOWARDS REAR AND ROTOR ORIENTED IN 100 POSITION.

Figure 5-21. Mixing Frequency Selector Switch A2S4, Wafer Diagram

(8) Using a pair of long-nosed pliers, unhook the detent spring A2MP27 from the detent roller A2MP4, then slide the detent roller away from the top of the gearshaft.

(9) Remove and discard the defective gearshaft.

(10) Insert the replacement gearshaft through the opening in the center of the cavity cover, through the rotor of switch A2S4, and through the clearance hole of the finger contact assembly A2E5.

(11) Turn the gearshaft slowly until the rotor of switch A2S4 is oriented as shown in figure 5-21; hold the gearshaft in this position while performing the procedure of step (12).

(12) Pivot the detent roller against the gearshaft; then hook the detent spring to the detent roller

(13) Pass the shaft of the switch detent through the clearance hole on the cavity cover and over the top of the nylon gearshaft.

(14) Place the bevel gear between the rear end of the shaft and the bearing on the cavity cover; orient it so that its teeth are facing the top of the bevel gear.

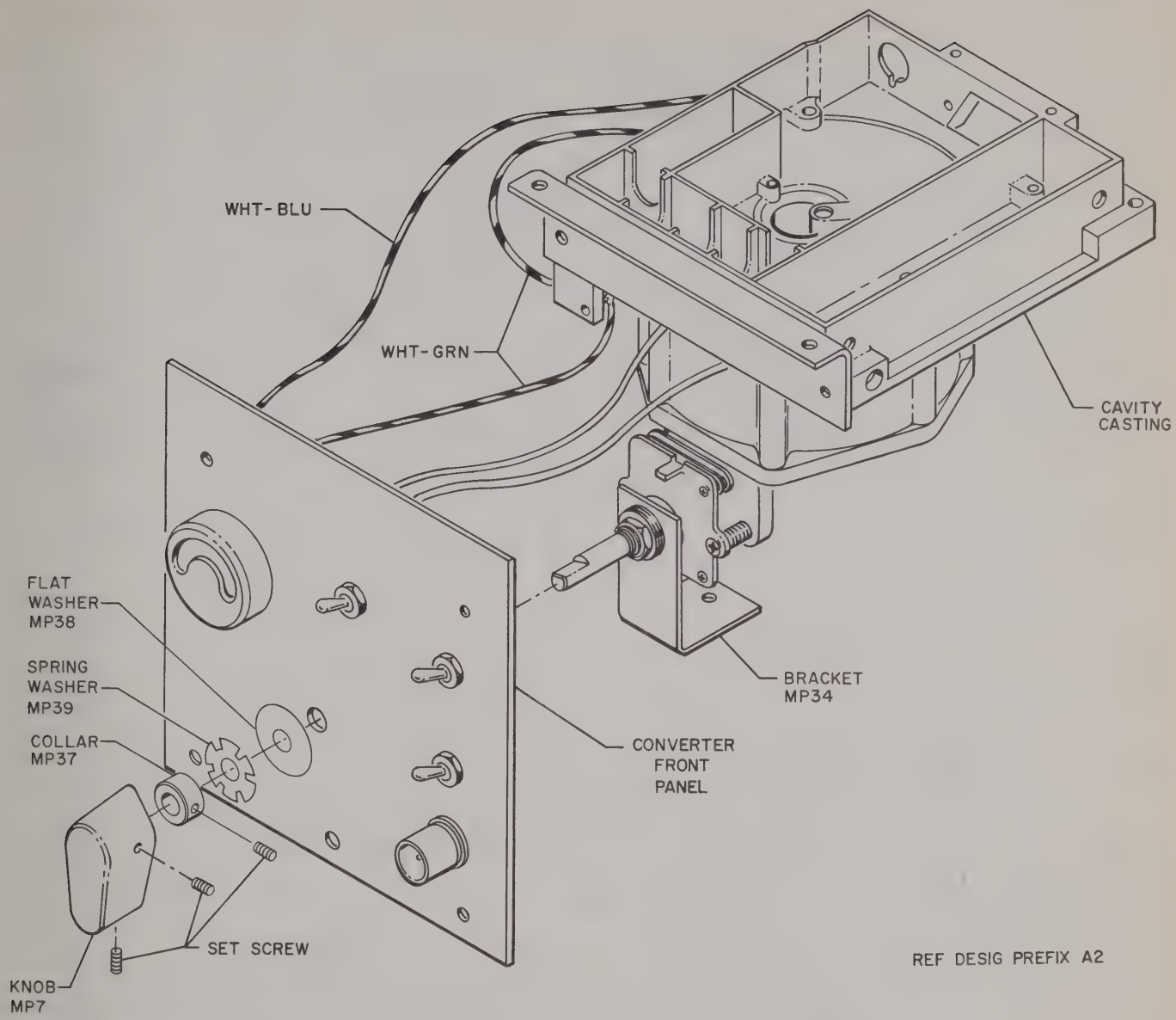

Figure 5-22. Electronic Frequency Converter A2, Front Chassis, Exploded View

(15) Pass the shaft of the switch detent through the bevel gear and the bearing.

(16) Mount the switch detent to the cavity cover by means of the two screws, spacers, washers, and nuts.

(17) Orient the bevel gear so that one of its setscrews is pointing toward the flat portion of the shaft, slide it forward until it meshes with the top of the gearshaft; and tighten both setscrews.

(18) Swing the front panel toward the front and up until it clears the front end of the shaft.

(19) Replace flat washer A2MP38, spring washer A2MP39, and collar A2MP37 on shaft, push collar against the tension of the spring washer, and secure collar with the setscrew.

(20) Place the knob on the shaft, align it with the front panel so that it points to the 100 marking; then tighten both setscrews.

w. SELECTING THE VALUE OF CAPACITOR A2C14. — Capacitor A2C14 of band 100 in the cavity is a part whose value is selected at the factory. It is a 5-percent mica capacitor to Mil Standard 242, and has a median value of 22 pf, and maximum of 27 pf, and a minimum of 18 pf. Its final value is determined by the tunability of band 100. Value selection is made when replacing a defective A2C14, or following replacement of capacitor A2C15, and is performed according to the following procedure:

(1) If a defective A2C14 is being replaced, proceed to step (2). If capacitor A2C15 was replaced. proceed to step (5).

(2) Disassemble the cavity casting as described in paragraph 5-5t.

(3) Choose a capacitor with a 22-pf value, and connect it temporarily to the terminals normally occupied by A2C14.

(4) Replace the cavity cover on the cavity casting and secure it temporarily with three screws.

(5) Connect test setup as shown in figure 5-23.

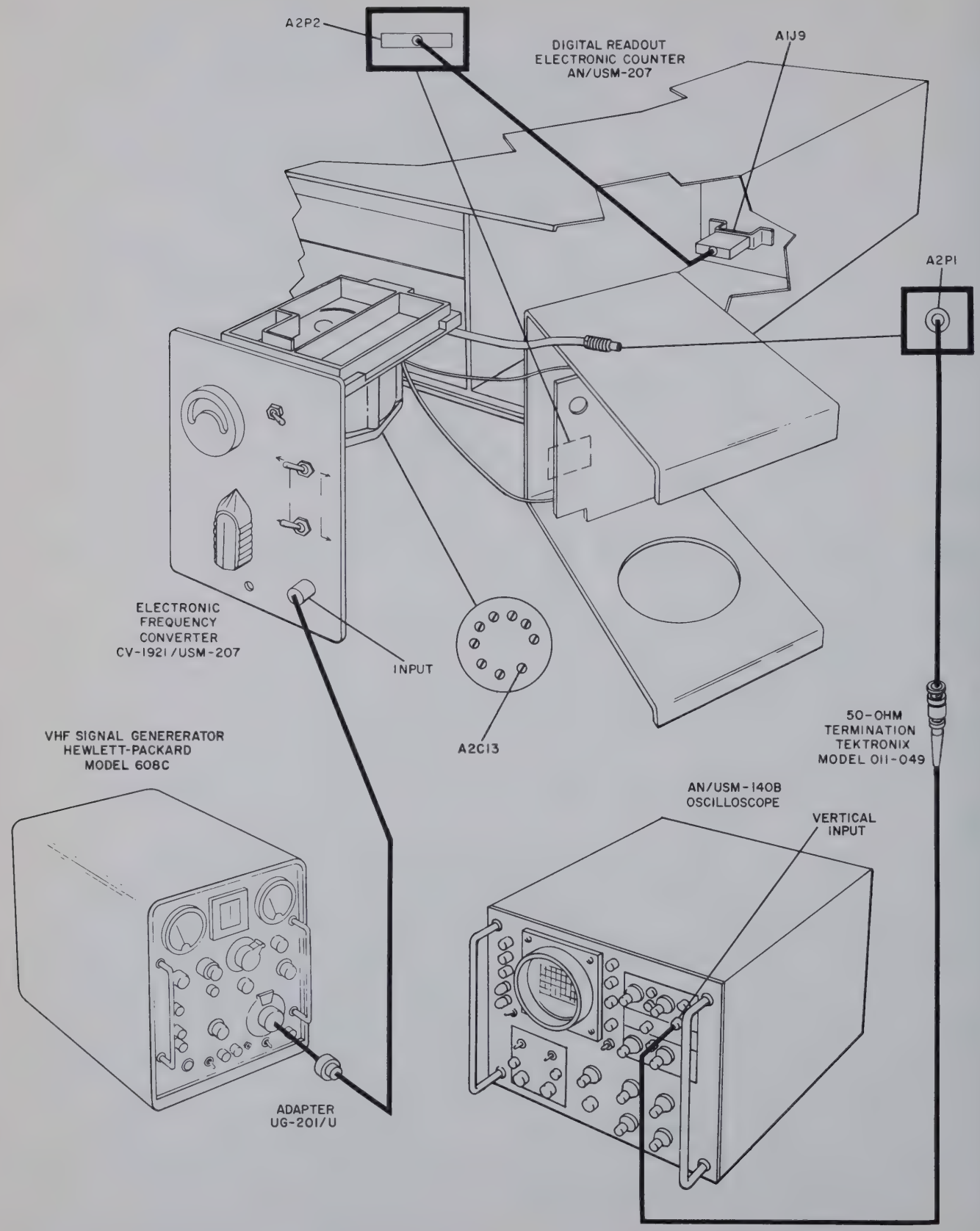

Figure 5-23. Selecting Capacitor A2C14, Test Setup

(6) Follow the procedure of steps (ar) through (av) of paragraph 5-4k(5) and adjust capacitor A2C13 for a peak 10 mc waveform. If the waveform peaks within the adjustment range of A2C13, proceed to step (7). If the waveform peaks at either end of the adjustment range of A2C13, leave the adjustment set at that end and proceed to step (8).

(7) If steps (2) through (4) were performed, disassemble the cavity casting, connect the 22-pf capacitor permanently, reassemble the cavity casting, and retouch A2C13 for a peak 10-mc waveform. If steps (2) through (4) were not performed, the existing A2C14 is of a correct value and need not be replaced.

(8) Note the adjustment setting of A2C13, select a replacement part as shown below and replace A2C14; then adjust A2C13 for a peak 10-mc waveform.

ADJUSTMENT SETTING OF A2C13	VALUE OF EXISTING A2C14	VALUE AND TYPE DESIGNATION OF REPLACEMENT A2C14
All the way in	18 pf	22 pf CM05D220J03
All the way in	22 pf	27 pf CM05D270J03
All the way out	27 pf	22 pf CM05D220J03
All the way out	22 pf	18 pf CM05D180J03

x. REPLACING RF TRANSFORMER A2T1.—Rf transformer A2T1 (figure 5-20) is mounted on the inside of the cavity and replaced according to the following procedure:

(1) Disassemble the cavity casting per paragraph 5-5t.

(2) Unsolder resistor A2R7 and the coaxial lead from the center of A2T1.

(3) Trace the two terminals of A2T1 to the outside of the cavity casting, and unsolder the lead from each terminal. Code-mark leads to insure proper reassembly.

(4) Remove excess solder from the terminals of A2T1 to allow them to slip through the teflon inserts, then remove the defective A2T1.

(5) Place the terminals of the replacement A2T1 into the teflon inserts; then push them all the way in.

(6) Solder the leads removed in step (3) to the terminals of A2T1 as marked in step (3).

(7) Find the geometrical center of A2T1, and solder to that point the resistor and coaxial lead removed in step (2).

(8) Reassemble the cavity and perform the balance adjustment procedure of paragraph 5-4k(6).

y. REPLACING RESISTOR A2R7.—

(1) Disassemble the cavity casting per paragraph 5-5t.

(2) On the inside of the cavity casting, unsolder the coaxial lead from the defective resistor.

(3) Unsolder the lead of the defective resistor from rf transformer A2T1.

(4) Unsolder the other lead of the defective resistor from the cavity casting; then remove the defective resistor.

(5) Place replacement resistor inside the cavity casting; insert one pigtail lead into the feed-through hole and solder it to the outside of the cavity casting.

(6) Wrap the end of the other pigtail lead around the top of the geometrical center of rf transformer A2T1, cut off any excess length in the lead, and solder it to the rf transformer.

(7) Solder the center conductor of the coaxial lead to the replacement resistor approximately halfway between the resistor body and the rf transformer.

(8) Reassemble the cavity and perform the balance adjustment procedure of paragraph 5-4k(6).

z. REASSEMBLING THE CONVERTER.—

(1) Place the cavity cover A2MP21 (figure 5-19) over the cavity casting A2MP20; be sure that the finger contact assembly A2E5 of the cavity cover mates smoothly with the projection in the cavity casting.

(2) Align the mounting holes; then secure the cavity cover to the cavity casting by means of the seven screws and washers.

(3) Swing the converter front panel upwards toward the front of the shaft, and slide the shaft through the mounting hole.

(4) Place the knob A2MP7 on the shaft (figure 5-22) and temporarily tighten one of the setscrews on the knob.

(5) Swing the cavity casting along with the converter front panel towards the converter chassis, and align the mounting holes of the converter front panel with the mounting holes on the front of the converter chassis.

(6) Replace the four screws and washers on the converter front panel (figure 5-18). Do not tighten the screws.

(7) Replace the four screws on top of the converter chassis.

(8) Replace the thumbscrew A2MP6 within slot at the bottom of the converter chassis.

(9) Secure bracket A2MP34 to the bottom of the converter chassis by means of the grounding screw.

(10) Pass connector A2P1 (attached to the end of the coaxial cable) through the mounting hole in the converter chassis, and mount it to the converter chassis by means of the nut and washer.

(11) Loosen the setscrew on the knob tightened in step (4), turn the knob so that it points to the 100 marking on the converter front panel, and tighten both setscrews. Fasten plate A2MP35 with three screws.

aa. ACCESS TO PARTS IN THE RADIO FREQUENCY OSCILLATOR A3. —

(1) Set counter POWER switch to OFF.

(2) Loosen the captive screw on the bottom center of A3.

(3) Slide A3 towards the rear and out of the counter chassis, and set on a work table near the counter.

ab. REPLACING THE 1 MC OSCILLATOR A3Y1. —

(1) Perform the procedure 5-5aa to gain access to A3Y1.

(2) Facing the right side of A3 (figure 5-56), disconnect the red lead from the +25 VDC terminal, the two black leads from the GND terminal, and the white-brown-red lead from the OSC. OUTPUT terminal.

(3) Set A3 on its left side.

(4) Remove and save the four screws that mount A3Y1 within A3. These screws are located on the bottom side of A3 opposite each corner of A3Y1.

(5) Note orientation of A3Y1 within A3 to insure proper reassembly, then remove and discard defective A3Y1.

(6) Orient replacement A3Y1 as noted in step (5), insert within A3 and secure with the four mounting screws removed in step (4).

(7) Connect and solder white-brown-red lead to the OSC. OUTPUT terminal of A3Y1.

(8) Connect and solder the two black leads to the GND terminal of A3Y1.

(9) Connect and solder red lead to the +25 VDC terminal of A3Y1.

(10) Replace A3 within the counter, using the reverse procedure of paragraph 5-5aa.

(11) Perform frequency adjustment procedure described in paragraph 5-4i.

ac. SHIPPING INSTRUCTIONS - 1-MC OSCILLATOR A3Y1. Ship the 1-mc oscillator to the repair facility according to the following procedure:

(1) Write on a tag the nature of the malfunction and tape it to one side of the oscillator case.

(2) Place the assembly in a plastic bag and wrap it in a double layer of 1/2-inch thick, embossed cellu-cushion. Use paper tape to hold the cellu-cushion in place.

(3) Pack the wrapped assembly in a 12 x 9 x 7-inch cardboard container. Place a layer of shredded paper or similar filler material between each surface of the wrapped assembly and the container walls to insure a snug fit.

(4) Seal the container with paper tape.

(5) Place a warning tag, similar to the one shown below, at two opposite corners of the container.

HANDLE WITH CARE

DELICATE
INSTRUMENTS

FRAGILE!

ad. ACCESS TO PARTS AND TEST POINTS IN THE 1-MC OSCILLATOR A3Y1.—Based on degree of accessibility, parts and test points of the 1-mc oscillator are divided into three groups, as follows:

Group 1. Parts in this group are accessible when the 1-mc oscillator is removed from the case and stripped of its insulation wrapping. Includes most parts of the temperature-control circuit.

Group 2. Parts in this group are accessible when the frequency generator is removed from the crystal oven. Includes parts mounted on printed circuit board A3Y1E1 as well as the crystal A3Y1Y1, and tuning capacitors A3Y1C2 and A3Y1C3.

Group 3. Parts in this group are accessible when the bottom cover is removed from the crystal oven. Includes parts of the temperature control not included in Group 1.

ae. DISASSEMBLING THE 1-MC OSCILLATOR A3Y1.—

(1) Remove and save the eight screws (four on each side) from the case of the 1-mc oscillator (see figure 5-24).

(2) Remove and save the screw and washer that secure the top cover A3Y1MP19 and remove the top cover and insulation pad.

(3) Unsolder the yellow, red, and black leads from the feedthru terminals A3Y1E19 through A3Y1E21.

(4) Slide the 1-mc oscillator out of its case; remove the glass tape and insulation wrapping A3Y1MP20 from the crystal oven.

(5) Remove and save the two screw-shafts (A3Y1MP21 and A3Y1MP22) and locking screws (figure 5-25).

(6) Unsolder the black lead from stud terminal A3Y1E18.

(7) Remove and save the eight screws and nuts that secure the crystal-oven cover A3Y1MP23 and remove the crystal-oven cover and crystal pad.

(8) Remove and save the three screws and washers that secure the frequency generator to the crystal oven; then slide the frequency generator out of the crystal oven.

(9) Remove the two screws and six washers that secure printed circuit board A3Y1E1 to the panel A3Y1MP6. All test points on the printed circuit board are now accessible, including test points J and K which are located on the foil side.

(10) Remove the four screws and washers that secure the bottom cover A3Y1MP26 to the crystal oven; then remove the bottom cover. Parts mounted on the bottom of the crystal oven are now accessible.

(11) To reassemble the 1-mc oscillator, perform the procedure of steps (1) through (10) in a reverse order.

af. REPLACING TRANSITORS A3Y1Q5 THROUGH A3Y1Q7.—

(1) Perform the procedure of steps (1) through (4) of paragraph ae.

(2) Remove all connections from the three leads of the transistor to be replaced (figure 5-26). Code-mark connections to insure proper reassembly.

(3) Remove and save the disc insulator (A3Y1MP13 through 15).

(4) Place crystal oven into a temperature chamber preheated to 225°F.

(5) Leave crystal oven in the temperature chamber for approximately 1/2 hour; then remove it.

(6) Note orientation of transistor with respect to the crystal oven.

(7) With a small pair of long-nosed pliers grasp all three transistor leads; using edge of crystal oven as a pivot, pry the transistor gently but firmly out of the crystal oven.

(8) Apply Epoxy Adhesive, Type 1 Mil-S-8623, into the opening in the crystal oven which houses the transistor.

(9) Place crystal oven into a temperature chamber preheated to 225°C, and leave it there for approximately 15 minutes to cure.

(10) Remove crystal oven from temperature chamber.

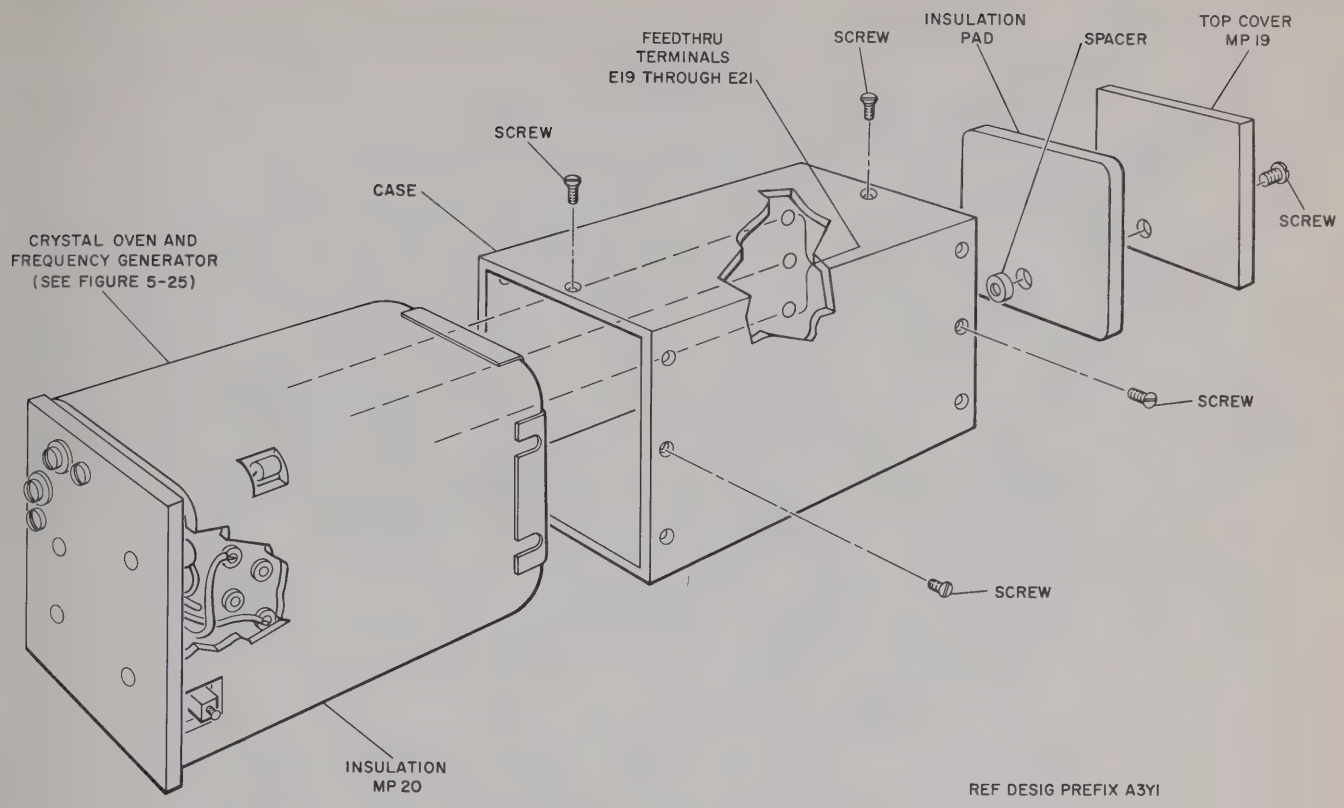

Figure 5-24. Disassembly of 1-MC Oscillator A3Y1

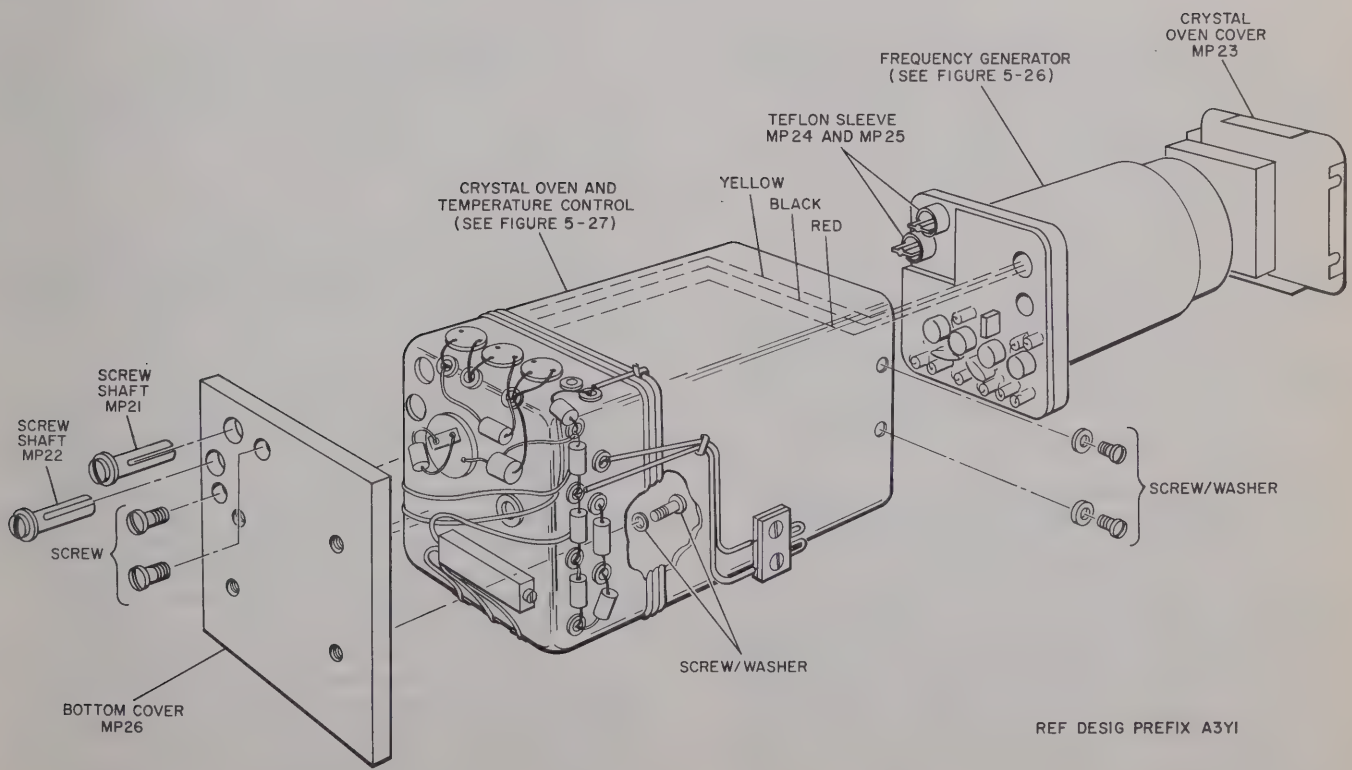

Figure 5-25. Disassembly of Crystal Oven

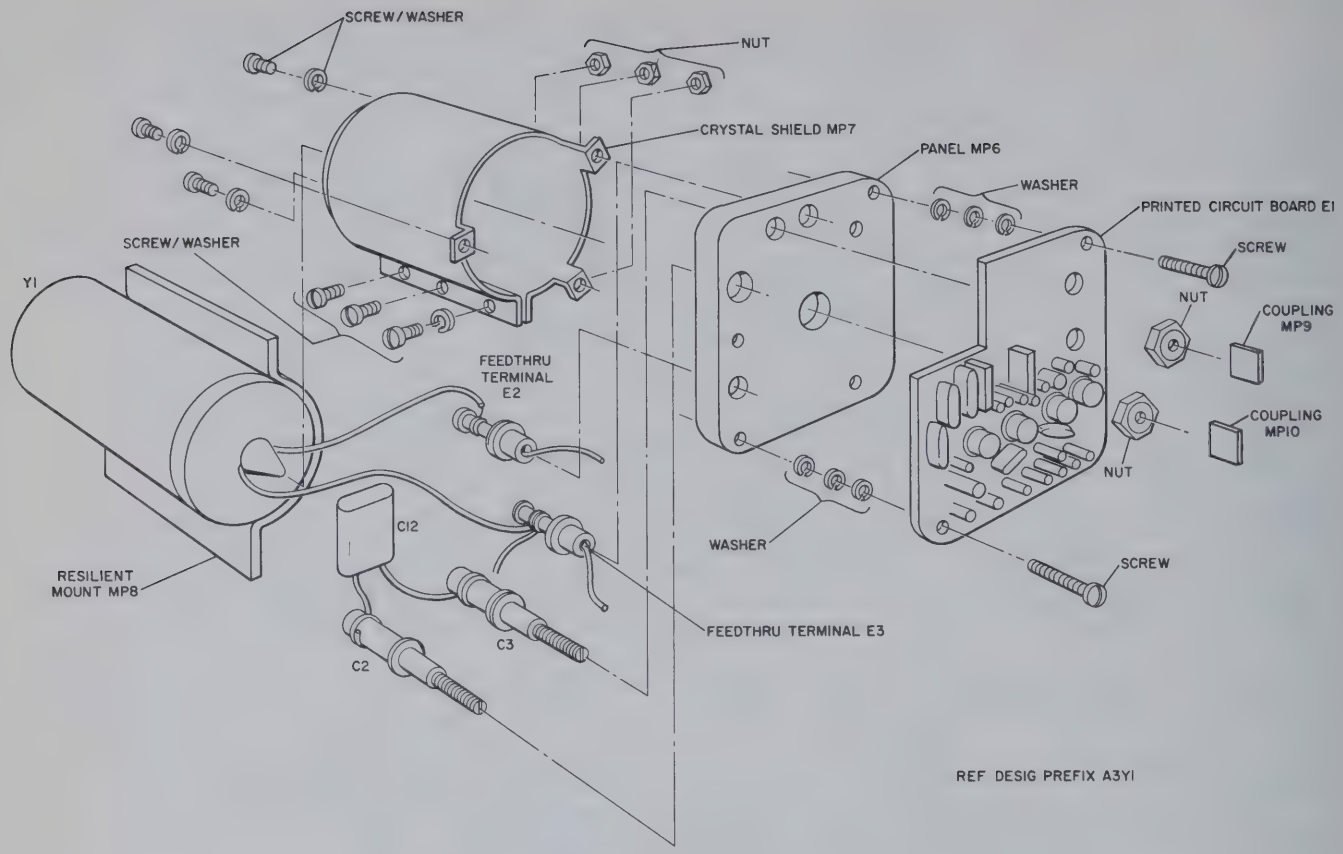

Figure 5-26. Disassembly of Frequency Generator

(11) Apply Epoxy Adhesive, Type 1 Mil-S-8623, around the entire replacement transistor, place insulation insert A3Y1MP16 (or MP17 or MP18) over the transistor, and together insert them into the opening on the crystal oven. Be sure the transistor is oriented as noted in step (6).

(12) Repeat the procedure of step (8).

(13) Replace the disk insulator.

(14) Replace the connections removed in step (2).

ag. REPLACING TRANSISTOR A3Y1Q8.—

(1) Remove all connections from the three leads of the transistor. Code-mark connections to insure proper reassembly.

(2) Apply rosin-core flux and solder to the bottom surface of the transistor. Note orientation of transistor.

(3) After the transistor has warmed up sufficiently, grasp the three leads with a pair of long-nosed pliers; then pull up and out.

(4) While crystal oven is still warm, scrape off excessive adhesive from inside and around transistor mounting hole.

(5) Apply Epoxy Adhesive, Type 1 Mil-S-8623, against the flange of the replacement transistor so that it forms a ring around the transistor case.

(6) Insert transistor into the mounting hole of the crystal oven. Rotate back and forth to smooth out adhesive; then position it so that it is oriented as noted in step (2).

(7) Scrape off excessive adhesive from around the transistor case.

(8) Place crystal oven in a temperature chamber preheated to 225°F, and allow it to cure for approximately 15 minutes.

(9) Remove crystal oven from temperature chamber.

(10) Cut off a square piece of mica insulation supplied with the replacement transistor, and place it over the bottom surface of the transistor; allow the collector and base leads to pass through the two holes of the insulation.

(11) Replace all connections removed in step (1).

ah. REPLACING CRYSTAL A3Y1Y1:—

(1) Perform the procedure of steps (1) through (8) of paragraph ae.

(2) Unsolder the two crystal leads from feedthru terminals A3Y1E2 and A3Y1E3 (figure 5-27).

(3) Remove and save the six screws and lockwashers that secure the crystal shield A3Y1MP7 to the panel A3Y1MP6; then remove the crystal shield together with the crystal.

(4) Remove and save the three screws, washers, and nuts that secure the crystal shield to the crystal; then remove the crystal shield.

(5) Remove and save the resilient mount A3Y1MP7 from around the defective crystal.

(6) Wrap resilient mount around the glass envelope of the replacement crystal; hold the wrap in

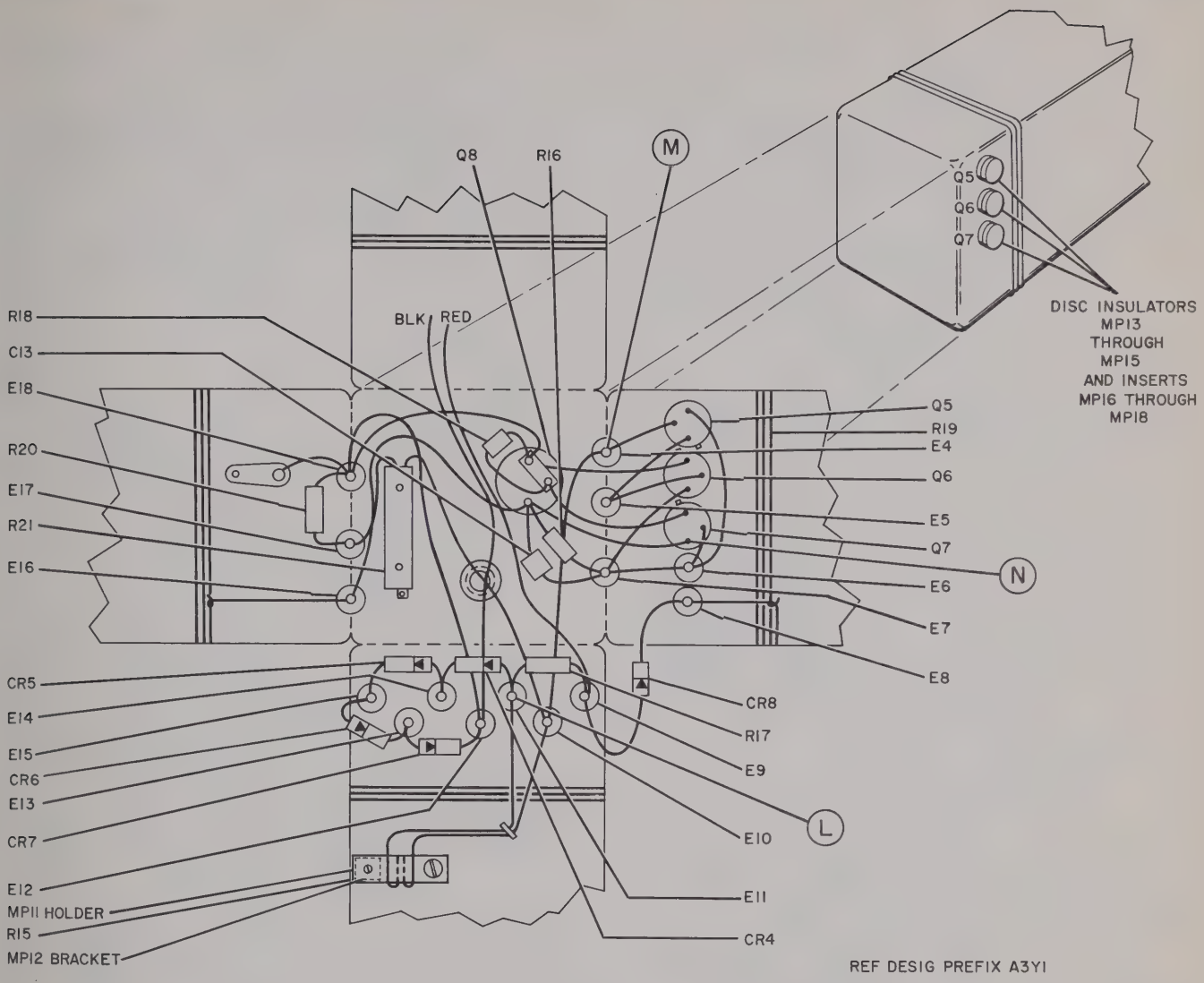

Figure 5-27. Crystal Oven, Location of Parts

place with one hand and slide the crystal shield over it. Allow the two crystal leads to pass through the bottom opening of the crystal shield.

(7) Secure crystal shield to the crystal by means of the three screws, washers, and nuts removed in step (4).

(8) Secure the crystal shield together with the crystal to the panel by means of the six screws and lockwashers removed in step (3).

(9) Place flexible tubing on each crystal lead; then solder them to the two feedthru terminals; either one of the leads may be soldered to either terminal.

(10) Reassemble the 1-mc oscillator by following steps (1) through (8) of paragraph ae in a reverse order.

(11) Perform the frequency adjustment procedure of paragraph 5-4i. Modify the test setup by applying operating power from an external power supply to the appropriate terminals of the 1-mc oscillator and obtain the 1-mc output signal from the 1-mc terminal.

(12) Set the temperature of the crystal oven to the turning point of the crystal as described in paragraph ai.

ai. SETTING THE TEMPERATURE INSIDE THE CRYSTAL OVEN.—

Note

The temperature setting procedure must be performed with special test equipment not available on board ship.

For proper operation, the regulated value of the temperature inside the crystal oven must be set to the turning point of the crystal. The turning point of a crystal is a temperature value where the crystal frequency is least sensitive to changes in temperature. The average crystal has its turning point at +75°C. Others may range from +70°C to +80°C. The procedure for setting the crystal-oven temperature

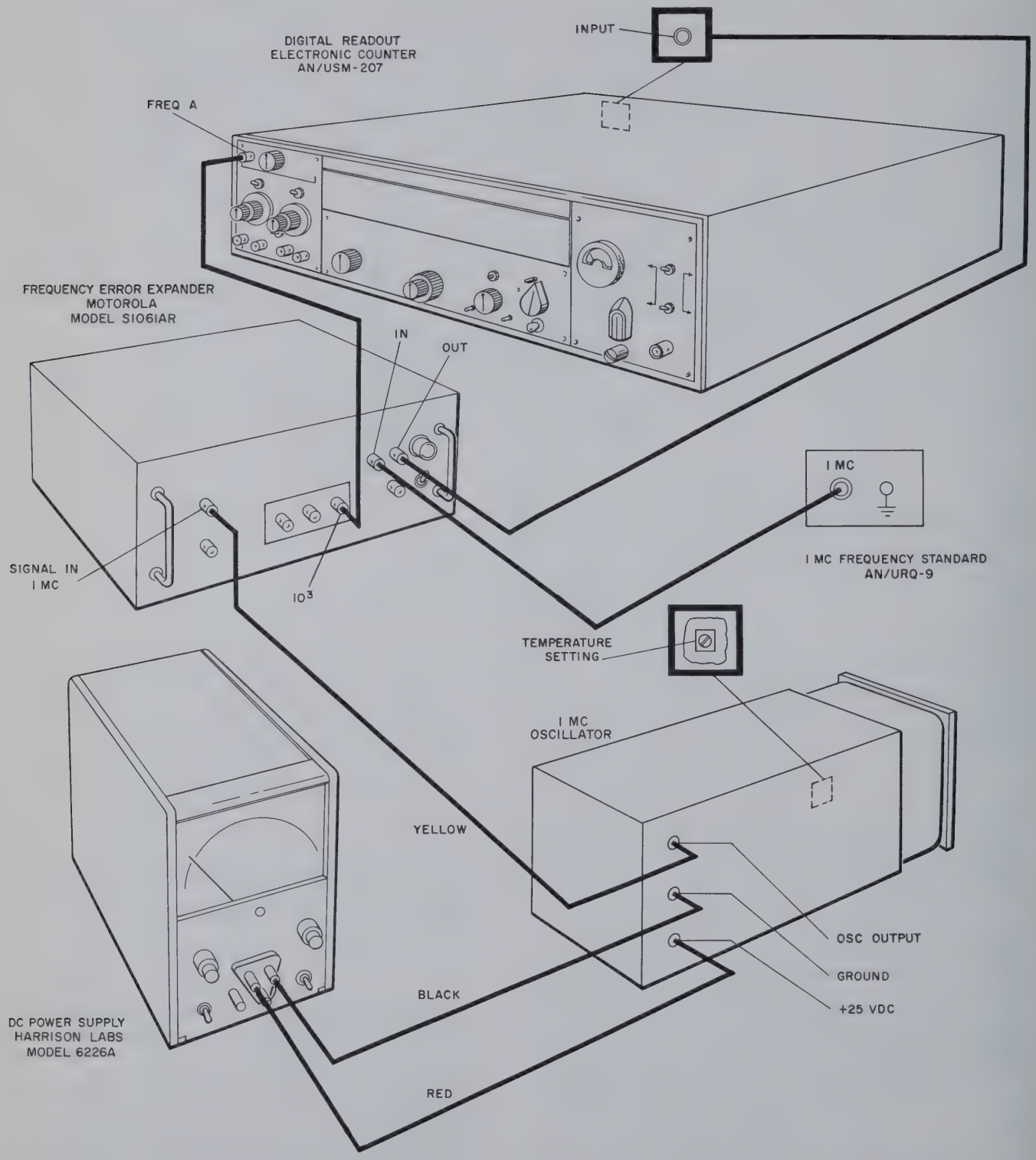

Figure 5-28. 1-MC Oscillator A3Y1 Temperature Setting, Test Setup

is given below. Perform it following replacement of the crystal or a part in the temperature control circuit.

(1) EXTENT OF DISASSEMBLY. To gain access to temperature setting resistor A3Y1R21, first perform steps (1) and (2) of paragraph ae. Next, slide the 1-mc oscillator partially out of its case, until the adjustment screw of the temperature setting resistor becomes visible. Do not disconnect the leads or remove any insulation padding.

(2) TEST SETUP.

(a) Connect test setup as shown in figure 5-28.

CAUTION

Do not connect dc power supply into the test setup until its output voltage has been set to approximately +25 volts.

(b) Set counter SENSITIVITY switch to 1V.

(c) Set counter POWER switch to STORE.

(d) Set counter FUNCTION switch to FREQ.

(e) Set counter time base switch to 1.

(f) Set counter REF FREQ 100 KC or 1 MC switch to EXT.

(g) Set counter DISPLAY control to MIN.

(3) WARM-UP. Allow a minimum of two hours for warmup before setting the temperature.

(4) INSTRUCTIONS.

(a) Observe and record digital display.

(b) With a screwdriver turn the adjustment screw of temperature setting resistor A3Y1R21 approximately 1/10 of a turn clockwise. Monitor digital display for five minutes; then record the results at the end of five minutes.

Note

Clockwise turn of A3YR21 increases oven temperature.

(c) Repeat the procedure of step (b) two or three times until a trend in frequency can be determined. If the frequency increases, proceed to step (d). If the frequency decreases, proceed to step (e). If the frequency remains essentially the same, proceed to step (f).

(d) Repeat the procedure of step (b) several times but turn A3Y1R21 in a counterclockwise direction. At first, the frequency will decrease with each incremental turn of A3Y1R21, followed by a region where the frequency will remain constant (inflection region), and then it will start to rise again. Note the setting of A3Y1R21 at each of the two critical points (see figure 5-29) and set it midway between these two points.

(e) Repeat the procedure of step (b) several times. As in step (d), the frequency will first decrease, followed by a region where it will essentially remain constant, and then start to increase. Note the setting of A3Y1R21 at each of the two critical points, and set it midway between these two points.

(f) Find the two critical points by turning A3Y1R21 first in one direction and then in the other

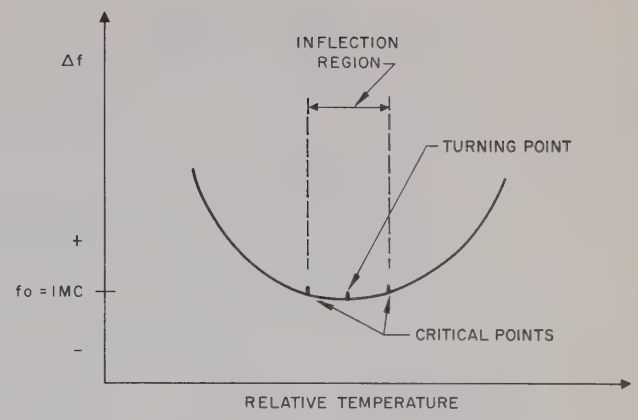

Figure 5-29. 1-MC Oscillator A3Y1, Frequency versus Temperature Curve

in 1/10-turn incremental steps; allow five minutes for each step as in step (b). Set A3Y1R21 midway between these two critical points.

aj. SELECTING THE VALUE OF CAPACITOR A3Y1C4.— Capacitor A3Y1C4 is a part whose value is selected at the factory. It has an mean value of 160 pf, and may range from 56 pf to 220 pf. It is selected according to the following procedure:

Note

The following procedure with special test equipment not available on board ship.

(1) Loosen the two locking screws and turn the COARSE and FINE adjustment capacitors A3Y1C3 and A3Y1C2 fully counterclockwise.

(2) Follow the procedure of steps (1) through (8) of paragraph ae, and separate the frequency generator from the crystal oven.

(3) Place frequency generator into a temperature chamber preheated to +75°C; leave it in the temperature chamber for a minimum of two hours.

(4) Remove the frequency generator from the temperature chamber.

(5) Connect frequency generator within the test setup shown in figure 5-30.

CAUTION

Before connecting the frequency generator into the test setup be sure that the dc power supply is set for an output voltage of exactly +25 volts.

(6) Set counter SENSITIVITY switch to 1V.

(7) Set counter POWER switch to STORE.

(8) Set counter FUNCTION switch to FREQ.

(9) Set counter time base switch to 1.

(10) Set counter REF FREQ 100 KC OR 1 MC switch to EXT.

(11) Set counter DISPLAY control to MIN.

(12) Starting with a value of from 56 pf to 65 pf, place a capacitor into the eyelets normally occupied by A3Y1C4.

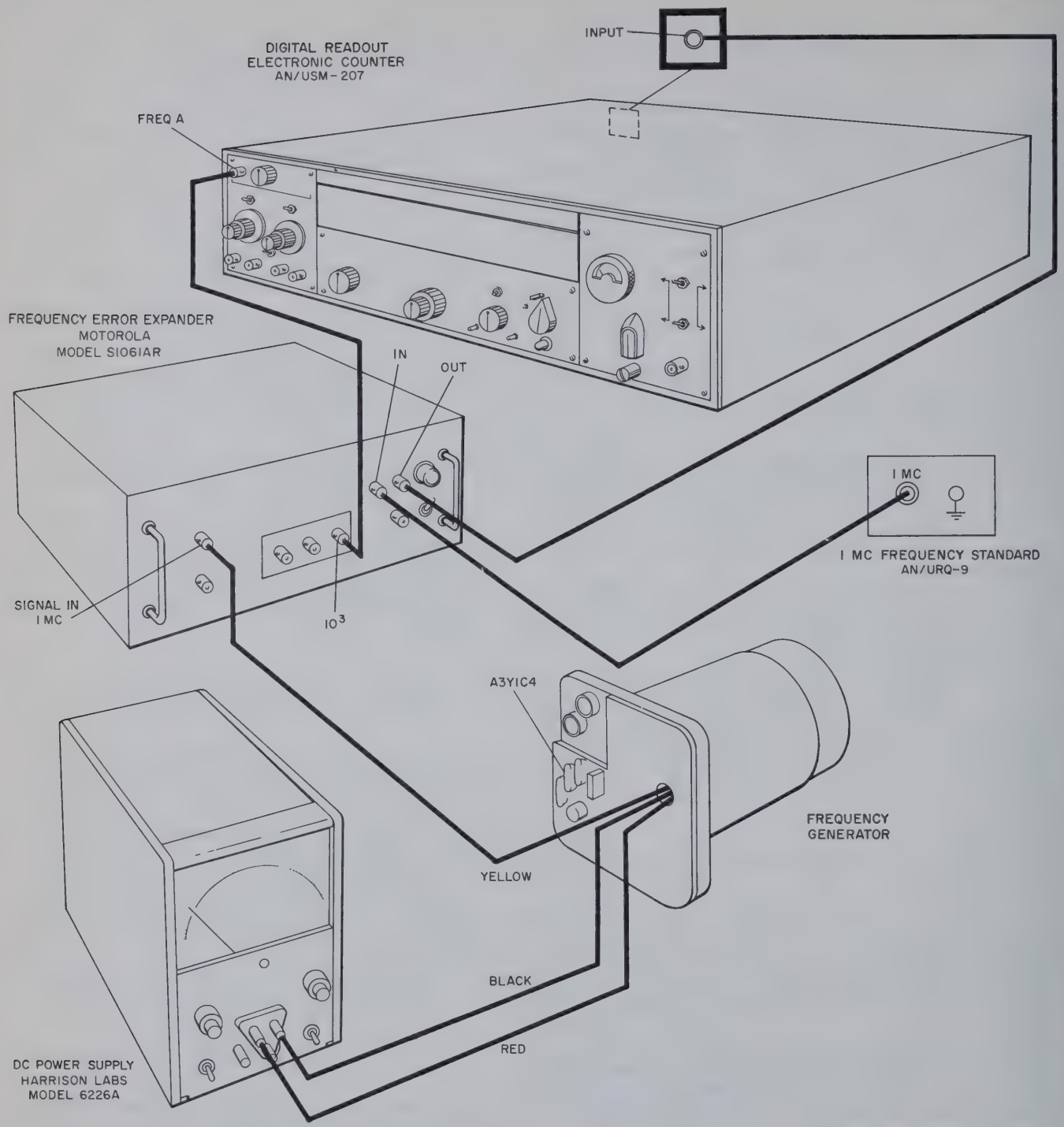

Figure 5-30. Selecting Capacitor A3Y1C4, Test Setup

(13) Observe digital display. If display is greater than 01003.000 kc, gradually increase value of A3Y1C4 until a reading of 01002.000 kc ±1.000 kc is obtained.

(14) Replace frequency generator within the crystal oven and reassemble the 1-mc oscillator by following the procedure of steps (1) through (8) of paragraph ae in a reverse order.

(15) Perform the frequency adjustment procedure of paragraph 5-4i. Modify the test setup by applying operating power from an external power supply to the appropriate terminals of the 1-mc oscillator, and obtain the 1-mc output signal from the 1 mc terminal.

ak. SELECTING THE VALUE OF RESISTOR A3Y1R1.—Resistor A3Y1R1 is a factory-selected part which determines the gain of the 1-mc oscillator. It has a mean value of approximately 40 k and may range from 10 k to 150 k. The correct value of this resistor is one which sets the amplitude of the

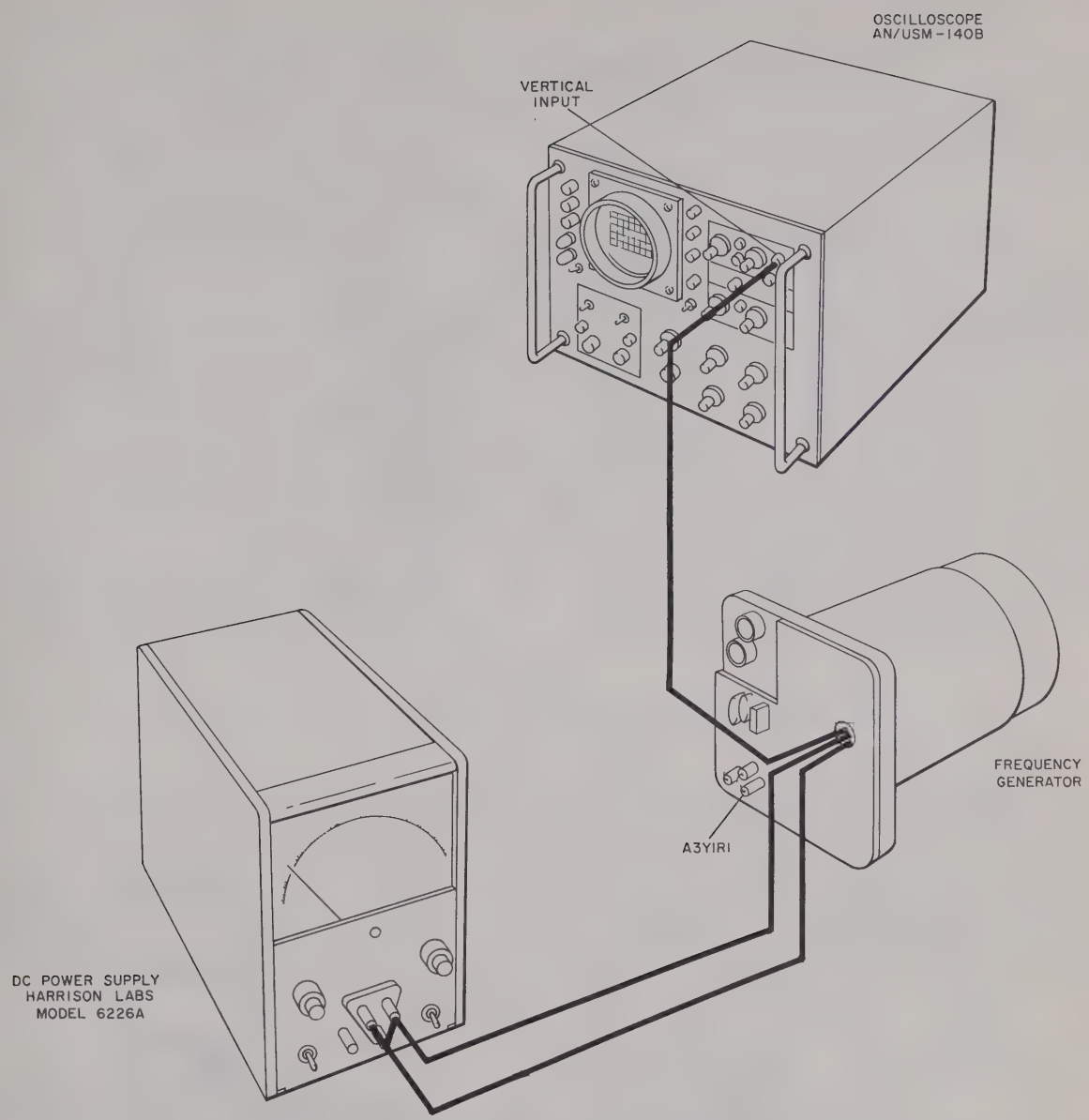

Figure 5-31. Selecting Resistor A3Y1R1, Test Setup

1-mc output signal between 3 volts and 4 volts peak-to-peak. The procedure is as follows:

Note

The following procedure must be performed with special test equipment not available on board ship.

(1) Follow the procedure of steps (1) through (8) of paragraph ae and separate the frequency generator from the crystal oven.

(2) Connect frequency generator within the test setup shown in figure 5-31.

CAUTION

Before connecting the frequency generator into the test setup, be sure that the dc power supply is set for an output voltage of exactly +25 volts.

(3) Set oscilloscope controls for a vertical deflection of 1 v/cm, a sweep rate of 1 μs/cm, and internal triggering.

(4) Connect a rheostat (or potentiometer) of approximately 200 k across the eyelets normally occupied by A3Y1R1.

(5) Adjust the rheostat for a waveform amplitude of 3.5 volts peak-to-peak.

(6) Disconnect the rheostat and measure its adjusted resistance; then connect in its place a

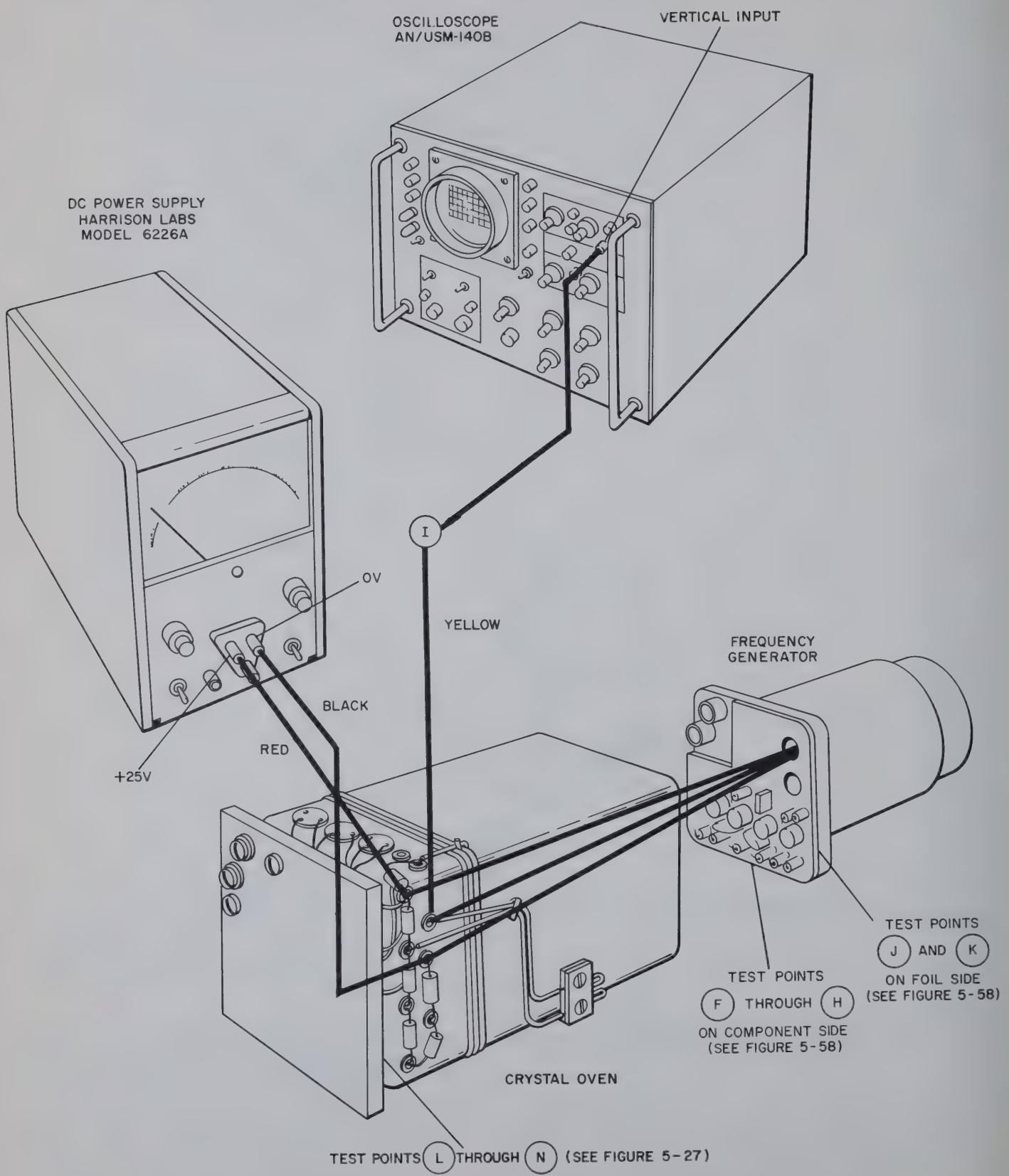

Figure 5-32. 1-MC Oscillator A3Y1 Trouble Shooting, Test Setup

1/4-watt, 2-percent resistor with an ohmic value nearest the measured value.

al. REPLACING LEADS ON CONNECTORS A1J13 AND A1J15.—The center conductor of connectors A1J13 and A1J15 each has two wires connected to it: the pigtail lead of a capacitor and a lead which connects to mode selector switch A1S9. When, on a given connector, either the capacitor or the lead needs to be replaced, also disconnect the other lead; either lead has sufficient service loop in it, and can be reused. Insert both the replacement lead and the reused lead together within the hollow of the center conductor of the connector, and solder in one operation.

am. REPLACING JUMPER WIRES ON CONNECTORS A1J8 AND A1J9 OF THE COUNTER, A2P2 OF THE CONVERTER, AND A3P1 OF THE OSCILLATOR.—On these connectors, all terminals which are at ground potential are connected together by means of jumper wires. When, on a given connector, a jumper wire needs to be replaced, replace the other wire (or wires) as well. Solder each pair of wires connecting to the same terminal in one operation.

an. ALIGNMENT PROCEDURE FOLLOWING REPLACEMENT OF CONNECTORS A2P2 AND A3P1. — Each of these connectors is secured by means of two Phillips-head screws to converter A2 an oscillator A3, respectively. After replacing either of these connectors, align it according to the following procedure:

(1) Loosen but do not remove the two Phillips-head screws securing the connector to the assembly (converter or oscillator, as applicable).

(2) Slide the assembly towards the center of the counter until the two alignment prongs of the connector align with the mating receptacle of the counter.

(3) Place middle-finger on connector and hold connector firmly in its aligned position; then slide assembly slowly out of the counter until the two Phillips-head screws are accessible, and tighten the two Phillips-head screws.

ao. COMPATABILITY ADJUSTMENT BEFORE INSTALLATION OF NEW CONVERTER A2 OR AFTER INSTALLATION OF NEW MULTIPLIER A1A6. —

(1) Set counter POWER switch to OFF.

(2) Connect preliminary test setup as shown in figure 5-3 except do not made connection between A2P1 of the converter and A1J10 of the counter.

(3) Terminate A2P1 in 50 ohms. Use a Tektronix Model 011-049 or similar 50-ohm termination.

(4) Connect the probe of an AN/USM-140B oscilloscope to the 50-ohm termination.

TABLE 5-21. SCHEMATIC DIAGRAMS CROSS-REFERENCE

Note

The assemblies and parts which are referenced between schematic diagrams are listed in the left-hand column below and are shown schematically on the illustrations listed in the right-hand column.

ASSEMBLY REFERENCE DESIGNATOR	SCHEMATIC DIAGRAM FIGURE NUMBERS
A1	5-63, 5-76, 5-78, 7-80, 5-81
A1A1	5-80
A1A2	5-68
A1A3	5-68
A1A4	5-68
A1A5	5-67
A1A6	5-66, 5-66A
A1A7	5-71, 5-79
A1A8	5-70
A1A9	5-72
A1A10	5-69, 5-80
A1A11	5-64, 5-65
A1A12	5-75, 5-77
A1A13	5-75, 5-77
A1A14	5-75, 5-77
A1A15	5-75, 5-77
A1A16	5-75, 5-77
A1A17	5-74, 5-77
A1A18	5-74, 5-77
A1A19	5-73, 5-77
A1A20	5-63

ASSEMBLY REFERENCE DESIGNATOR	SCHEMATIC DIAGRAM FIGURE NUMBERS
A1A21	5-63
A1A22	5-64, 5-64A
A1A23	5-65, 5-65A
A1DS4	5-78
A1DS5	5-78
A1DS6	5-78
A1DS7	5-78
A1DS8	5-78
A1DS9	5-78
A1J9	5-61
A1J10	5-63
A1J11	5-76
A1P1	5-70
A1S1	5-59, 5-80
A1S2	5-81
A1S3C	5-81
A1S4I	5-81
A1S9	5-64
A1S13	5-66
A2	5-61, 5-61A
A2A1	5-62
A3	5-60

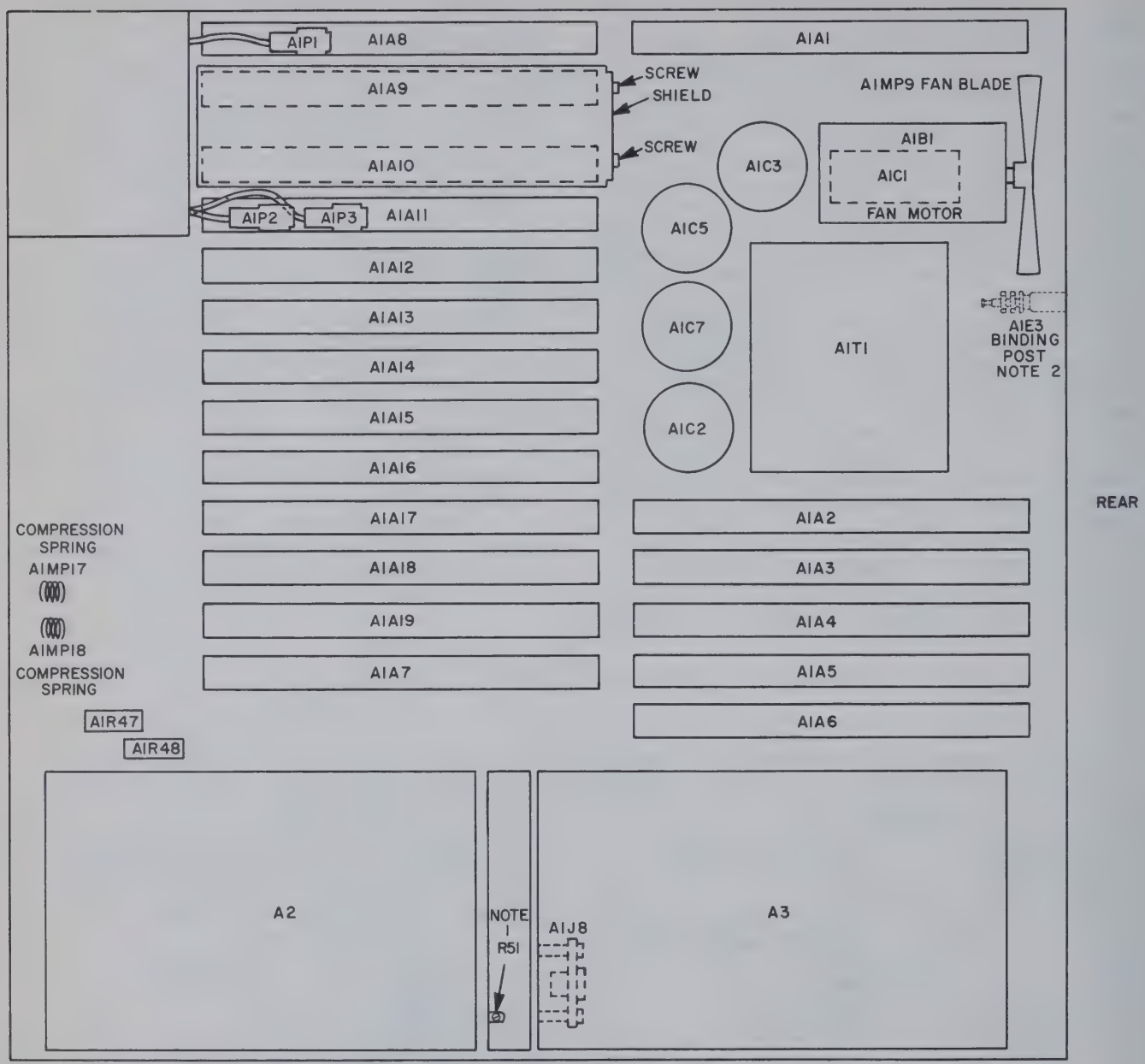

NOTE 1. R51 NOT USED ON COUNTERS WITH SERIAL NO. A4 THRU A13, A15, A17, A18, A20, A21, A22, A24, THRU A30, A31, A33 & A36.
NOTE 2. A1E3 SUPPLIED ONLY ON COUNTERS WITH SERIAL NO. A210 AND UP.

Figure 5-33. Counter Top View, Location of Parts

(5) Set oscilloscope controls for a vertical deflection of 0.05 v/cm and a sweep time of 1 μs/cm.

(6) Set counter POWER switch to TRACK or STORE.

(7) Set converter DIRECT-HETERODYNE switch to HETERODYNE.

(8) While observing oscilloscope, turn mixing frequency selector switch to all positions. Note switch position where 1-mc and/or 10-mc noise is maximum; then set it to that position.

(9) Adjust A2T1 (figure 5-4) slightly for minimum noise level. The noise level should be 10 millivolts or less at all positions of the mixing frequency selector switch.

ap. REPLACING GATE LAMP A1DS2 AND OVEN LAMP A1DS3. —

(1) Unplug power cord from the power source.

(2) Set POWER switch to STBY.

(3) Turn DISPLAY control to the extreme counterclockwise position.

(4) Set time base switch and STD FREQ OUT switch to 10^4.

(5) Set FUNCTION switch to FREQ.

(6) Loosen the two setscrews on FUNCTION-switch knob A1MP7, and remove knob.

(7) Remove and save mounting nut and flat washer that secure FUNCTION switch to front panel.

(8) Loosen the two setscrews on STD FREQ OUT switch red knob A1MP6, and remove the knob.

(9) Loosen the two setscrews on time base switch black knob A1MP10, and remove the knob.

(10) Remove and save mounting nut and flat washer that secure the time base switch and STD FREQ OUT switch to the front panel.

(11) Loosen the two setscrews on knob A1MP5 of the POWER switch, and remove the knob.

(12) Remove and save the mounting nut and flat washer that secure the POWER switch to the front panel.

(13) Loosen the two setscrews on knob A1MP5 of the DISPLAY control, and remove the knob.

(14) Remove and save mounting nut and flat washer that secure DISPLAY control to the front panel.

(15) Remove and save the two screws and flat washers on the front panel below the observation window.

(16) Remove and save the two screws and flat washers from the bottom of the front panel.

(17) Set the counter on its left side with the front panel facing forward.

(18) Remove and save the nut and flat washer that secure cable clamp through which the lamp leads are routed.

(19) OVEN lamp only. Unsolder the black lead and the white lead from terminal 2 of A1XA18; then unsolder the white-yellow-violet and white leads from terminal 3 of A1XA18.

(20) GATE lamp only. Unsolder the white lead and the white-orange-violet lead from terminal 2 of A1XA17; then unsolder the white lead and the green lead from terminal 3 of A1XA17.

(21) Note the routing of the two white leads removed in step (19) or step (20), as applicable; then pull these leads free of the cable clamp.

(22) With a 5/8-inch open-end wrench remove the nut that secures the lamp to the inside of the front panel; then remove the lamp.

(23) Insert replacement lamp into the mounting hole from the inside, and secure the lamp with the mounting nut supplied.

(24) Feed the lamp leads through the cable clamp and route them as noted in step (21).

(25) Secure cable clamp with nut and washer removed in step (18).

(26) Extend end of leads to terminal 3 of A1XA18, allow approximately 1/2-inch service loop, and cut off any excess from the end.

(27) OVEN lamp only. Solder either of the white lamp leads together with the black lead removed in step (19) to terminal 2 of A1XA18; then solder the other white lead together with the white-yellow-violet lead to terminal 3 of A1XA18.

(28) GATE lamp only. Solder either of the white lamp leads together with the white-orange-violet lead of terminal 2 of A1XA17; then solder the other white lead together with the green lead of terminal 3 of A1XA17.

(29) Slide front panel slowly toward the rear, allowing the switch shafts to pass through the mounting holes, until the panel is flush with the observation window.

(30) Secure front panel with the screws and flat washers removed in steps (15) and (16).

(31) Secure POWER switch to front panel with mounting nut and washer removed in step (12). Place knob A1MP13 on shaft, with the index pointing to the STBY marking, and tighten the two setscrews.

(32) Secure DISPLAY control to front panel with the mounting nut and washer removed in step (13). Place knob A1MP5 on shaft, with the index pointing to the MIN marking, and tighten the two setscrews.

(33) Secure the time base switch and STD FREQ OUT switch to front panel with mounting nut and washer removed in step (10). Place black knob A1MP6 on shaft, with index pointing to 10^4 marking, and tighten the two setscrews. Place red knob A1MP10 on shaft, with index pointing to the 10^4 marking, and tighten the two setscrews.

(34) Secure FUNCTION switch to front panel with mounting nut and washer removed in step (7). Place knob A1MP7 on shaft, with index pointing to the FREQ marking, and tighten the two setscrews.

aq. REPLACING RESET SWITCH A1S6. —

(1) Set POWER switch to OFF.

(2) Remove 17 screws which fasten the top cover, and remove the cover.

(3) Remove printed-circuit board A1A18.

(4) Unsolder the green lead and white-yellow-blue lead from the switch terminals.

(5) Remove and save the mounting nut and flat washer that fasten the RESET switch to the front panel.

(6) Pull the RESET switch from the inside until the switch clears the front panel; then lift the switch slightly in order to expose the switch terminals.

(7) Unsolder the green lead and the white-yellow-blue lead from the two terminals of the defective switch.

(8) Remove and discard defective switch.

(9) Solder the two leads removed in step (7) to the replacement switch terminals.

(10) Push replacement switch through the front-panel mounting hole, and secure with the nut and flat washer.

(11) Replace printed-circuit board A1A18.

(12) Replace top cover and secure with the 17 screws.

ar. REPLACING POWER INDICATOR LAMP A1DS1. — To replace the POWER indicator A1DS1 lamp, unscrew the defective lamp from the front and insert a new lamp.

5-6. LOCATION OF PARTS.

Figures 5-33 through 5-58 show location of parts. Parts and subassemblies are identified on the illustrations by reference designations and cross-referenced in the tables adjacent to the illustrations when the number of parts exceeds 30. These tables identify the parts by use of map-type coordinates. The parts list, table 6-1, also lists all parts by reference designations, and cross-references the appropriate illustration where the part appears.

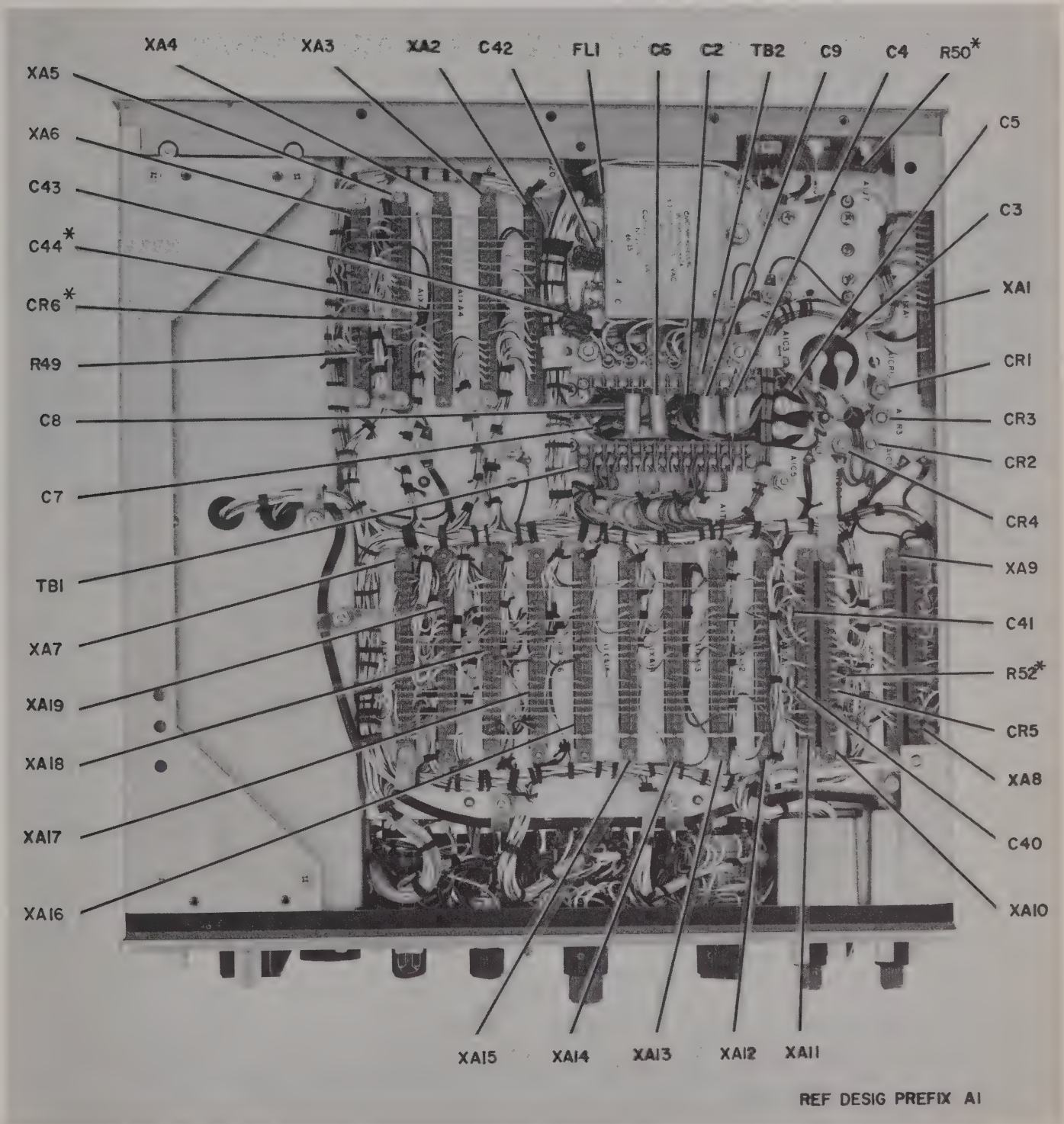

*NOTE 1. These parts are used only on counters with serial No. A1, A2, A3, A14, A16, A19, A23, A29, A32, A34, A35, A37 and up.

Figure 5-34. Counter Bottom View, Location of Parts

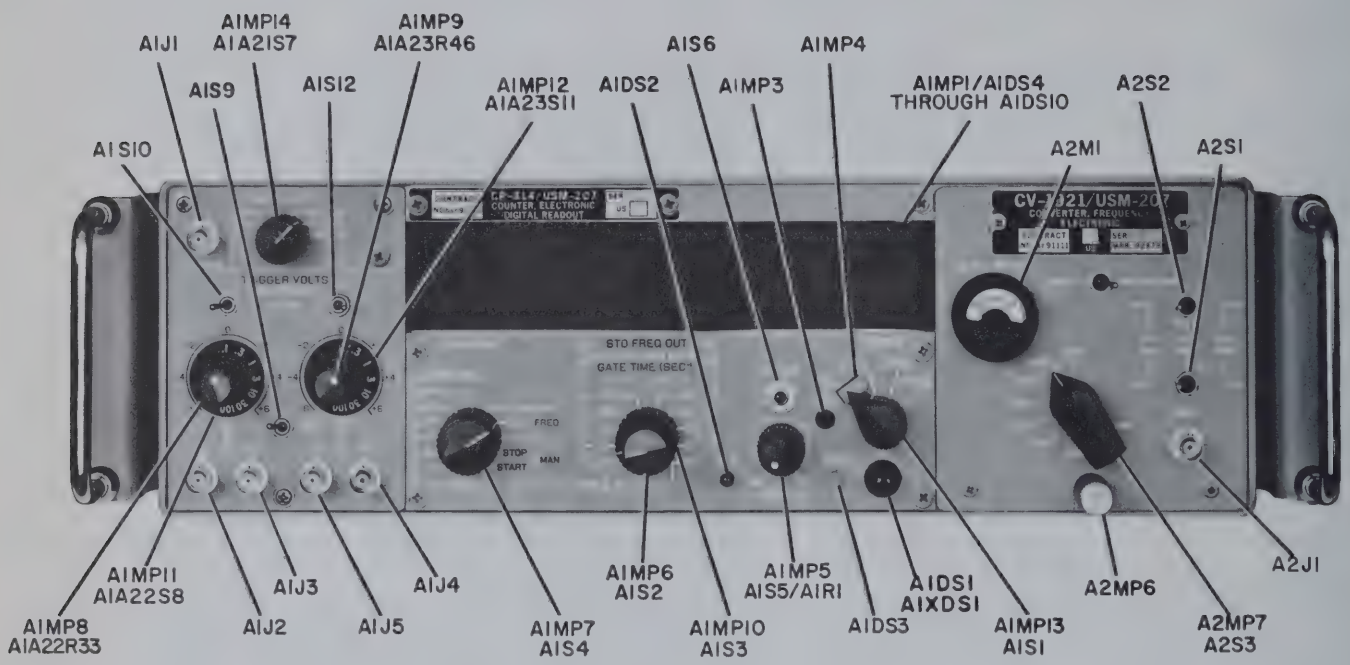

Figure 5-35. Counter Front View, Location of Parts

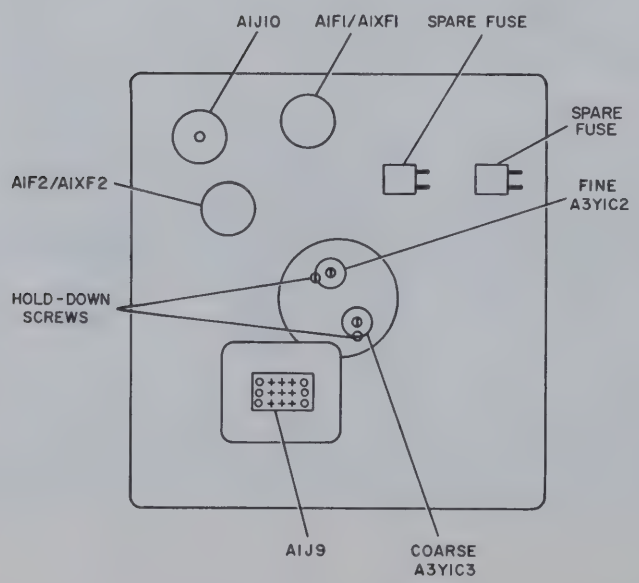

Figure 5-36. Counter Front View, with Converter Removed, Location of Fuses and Oscillator Adjustments

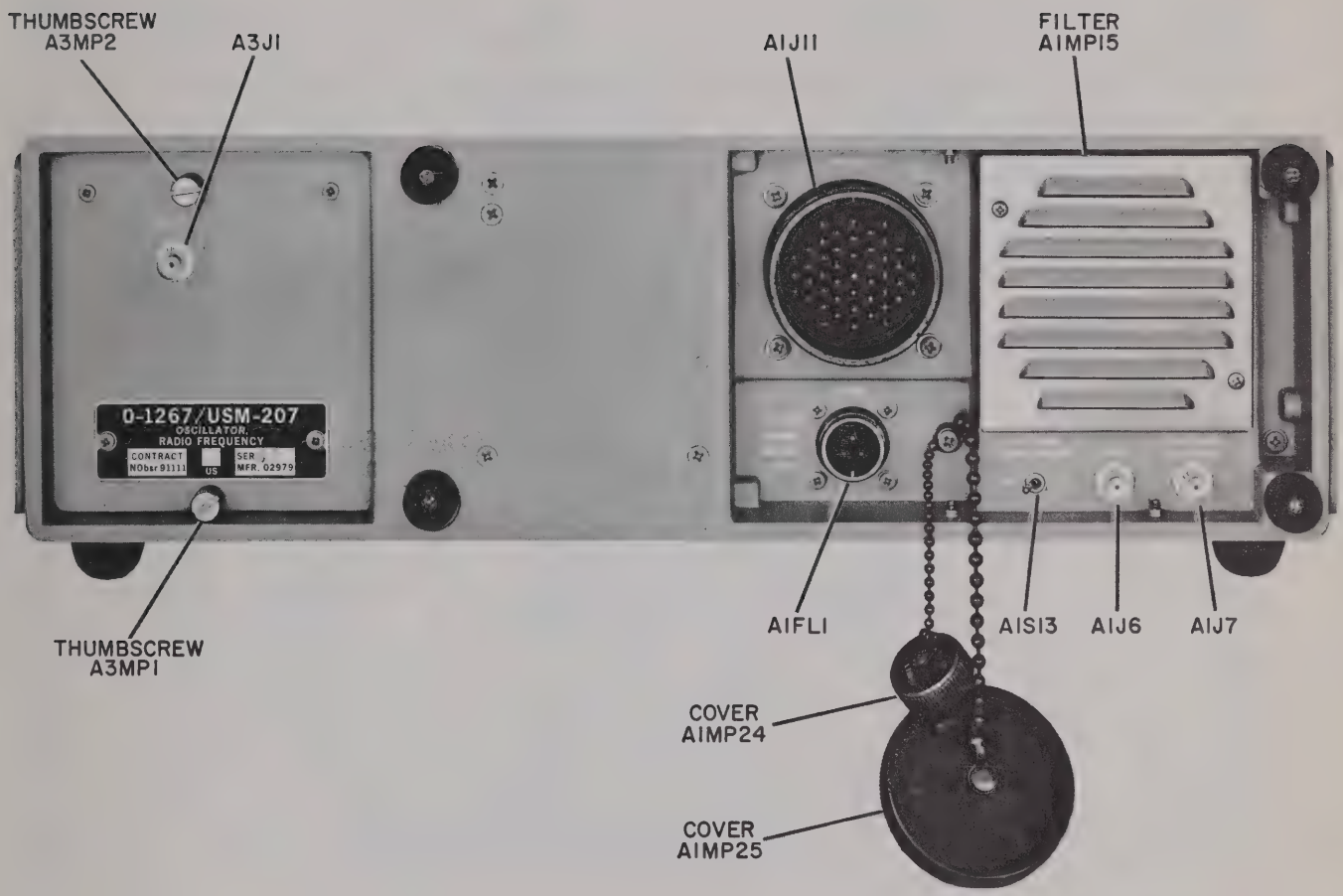

Figure 5-37. Counter Rear View, Location of Parts

PARTS LOCATION INDEX FOR FIGURE 5-38

REF. DESIG.	DRAWING LOCATION
C1	5D
C2	3C
C3	3C
C5	2D
C6	2C
C7	4C
CR1	6D
CR5	6C
CR6	6C
CR7	6C
CR8	5C
CR9	4C
CR10	4C
CR11	4D
CR12	4D
CR13	4C
CR14	3C
CR15	2D
CR16	1D
Q1	5F
Q2	3C
Q3	3C
Q4	2D
Q5	4F
Q6	2D
Q7	2F
Q8	2D

REF. DESIG.	DRAWING LOCATION
R1	6D
R2	5D
R3	5D
R4	5C
R5	4D
R6	3C
R7	3C
R8	2C
R9	3C
R10	2C
R11	2D
R12	3D
R13	2C
R14	3D
R15	3D
R16	2D
R17	2C
R18	1D
R19	2C
R20	2D
R21	3C
TP1	6D
TP2	5C
TP3	5C
TP4	4D
TP5	2D
TP6	1C

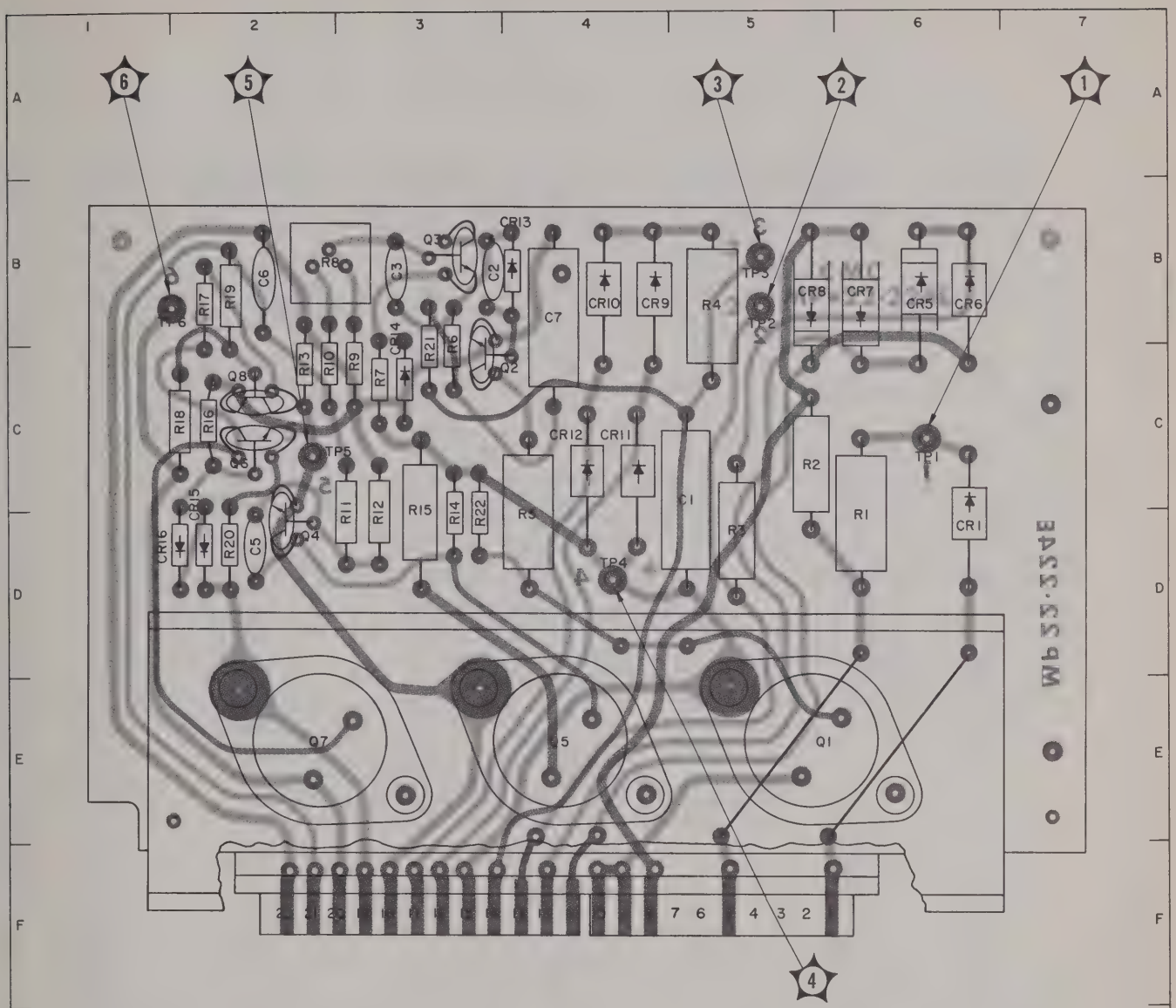

PIN	SIGNAL	CONNECTION
1	115 vac	From A1T1
5	+180 v supply	To readout circuits A1A12 through A1A19
8	Ground	
9	+14 v	From A1CR1
10	+14 v	From A1CR3
11	37.5 vac	From A1T1
12	37.5 vac	From A1T1
13	+45 v supply	To all functional sections
14	+18 v supply	To all functional sections

PIN	SIGNAL	CONNECTION
15	+12 v supply	To all functional sections
16	6 vac	From A1T1
17	6 vac	From A1T1
18	+6 v supply	To all functional sections
19	-14 v	From A1CR2
20	-12 v supply	To all functional sections
21	+12 v sample	
22	Ground	From +12 vdc bus

REF DESIG PREFIX A1A1

Figure 5-38. Voltage Regulator A1A1, Location of Parts

PARTS LOCATION INDEX FOR FIGURE 5-39

REF. DESIG.	DRAWING LOCATION
C1	6D
C2	6D
C3	7E
C4	6E
C5	5D
C6	5D
C7	6D
C8	5E
C9	4D
C10	4D
C11	5D
C12	4D
C13	3D
C14	3D
C15	4D
C16	3D
C17	7C
C18	7B
C19	6C
C20	6B
C21	7B
C22	6B
C23	5C
C24	5B
C25	6B
C26	5B
C27	4B
C28	4B
C29	5B
C30	4B
C31	3B
C32	3B
C33	3B
C34	3B
CR1	7D
CR2	7D
CR3	6D
CR4	6E
CR5	6D
CR6	6E
CR7	5D
CR8	5D
CR9	4D
CR10	4E

REF. DESIG.	DRAWING LOCATION
CR11	4D
CR12	3D
CR13	6B
CR14	7B
CR15	6C
CR16	6B
CR17	5B
CR18	5B
CR19	5B
CR20	3B
CR21	4B
CR22	4B
CR23	4B
CR24	2B
Q1	7D
Q2	6D
Q3	6D
Q4	5D
Q5	5D
Q6	4D
Q7	4D
Q8	3D
Q9	2D
Q10	2D
Q11	2D
Q12	1C
Q13	6C
Q14	6C
Q15	5C
Q16	5C
Q17	4C
Q18	4C
Q19	3C
Q20	3C
Q21	2B
Q22	1B
R1	3E
R2	7E
R3	7D
R4	6D
R5	6E
R6	6C
R7	6C
R8	6E

REF. DESIG.	DRAWING LOCATION
R9	6D
R10	6E
R11	6D
R12	2C
R13	5E
R14	6D
R15	5D
R16	5C
R17	5C
R18	5C
R19	5D
R20	5E
R21	5E
R22	6E
R23	4E
R24	5D
R25	4D
R26	4C
R27	4C
R28	4C
R29	4D
R30	4E
R31	4D
R32	3E
R33	4D
R34	3D
R35	3C
R36	3C
R37	3C
R38	3D
R39	3D
R40	3D
R41	2D
R42	2D
R43	2D
R44	2D
R45	2D
R46	2D
R47	2C
R48	2C
R49	2C
R50	6B
R51	6B
R52	6C

REF. DESIG.	DRAWING LOCATION
R53	6C
R54	6C
R55	6C
R56	6B
R57	6B
R58	6B
R59	2C
R60	5B
R61	5B
R62	5C
R63	5C
R64	5C
R65	5C
R66	5B
R67	5B
R68	5B
R69	6B
R70	4B
R71	4B
R72	4C
R73	4C
R74	4C
R75	4C
R76	4B
R77	4B
R78	4B
R79	3B
R80	3C
R81	3B
R82	3C
R83	3C
R84	3C
R85	3C
R86	3B
R87	3B
R88	3B
R89	1B
R90	1B
R91	2B
R92	2C
R93	2C
TP1	2B
TP2	2B
TP3	2B

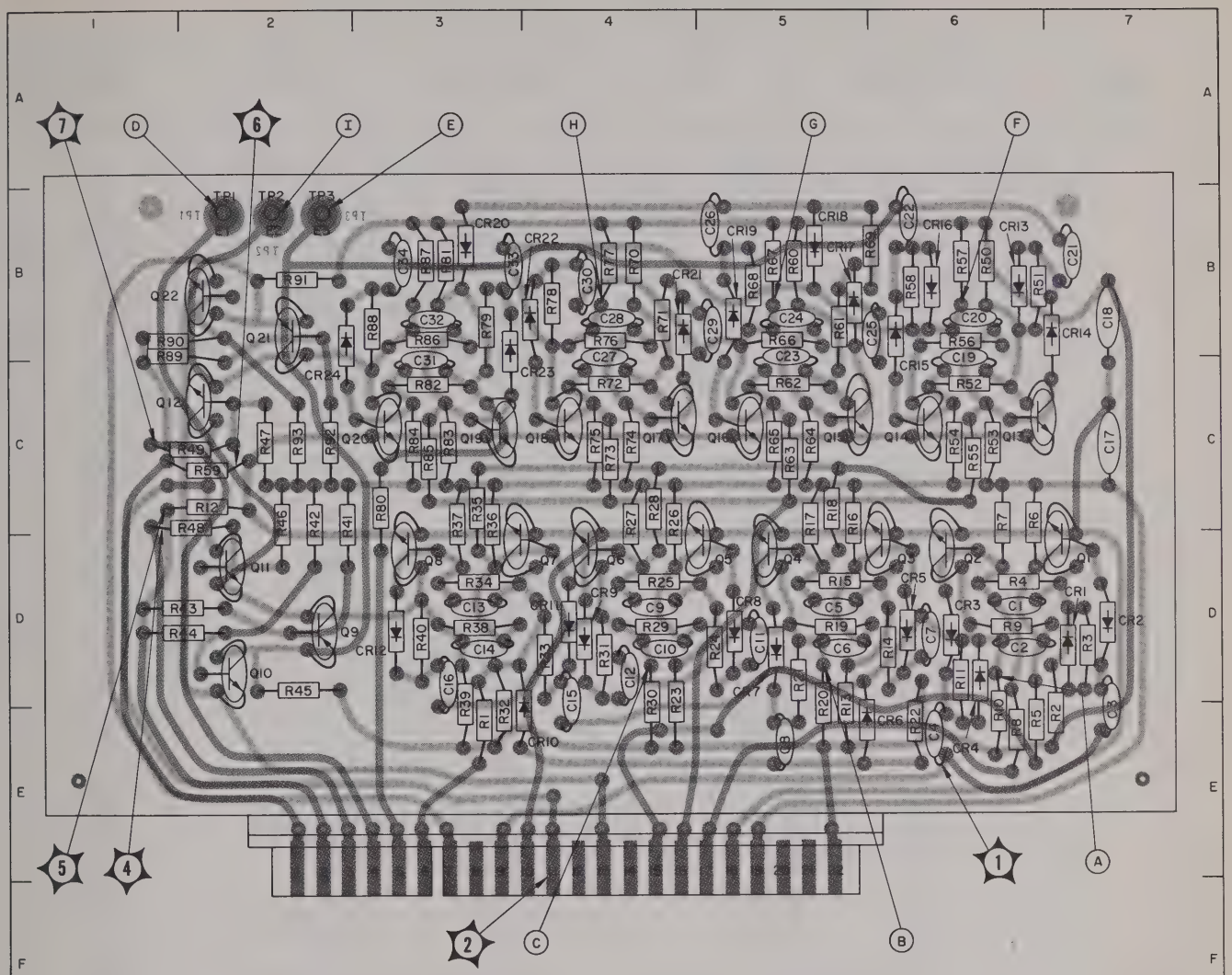

PIN	SIGNAL	CONN A1A2	CONN A1A3	CONN A1A4
1	"B" signal select (F1 + F3 + F5 + F7)	From A1XA10-9	From A1S4I-6	From A1S4I-8
2	1/10 "B" signal select (F2 + F4 + F6)	From A1S4I-5	From A1S4I-7	From A1S4I-9
3	Divide by 10 select (T2 + T4 + T6)	From A1S3C-9	From A1S3C-11	From A1S3C-1
4	Divide by 100 select (T1 + T3 + T5)	From A1S3C-8	From A1S3C-11	From A1S3C-12
5	1/100 standard frequency	To A1S2-8	To A1S2-10	To A1S2-12
6	1/10 standard frequency	To A1S2-9	To A1S2-11	To A1S2-1
7	Divider signal* or multiple "B" signal**	**To A1XA10-13	*To A1XA2-9	*To A1XA3-9
9	Divider signal	From A1XA3-7	From A1XA4-7	From A1XA5-7
10	Ground			
11	Time base signal	To A1XA5-11	To A1XA5-11	To A1XA5-11
13	"B" signal	From A1XA11-8	From A1XA11-8	From A1XA11-8
15	Reset	Not used	Not used	From A1XA7-T
16	Reset	From A1XA7-T	From A1XA7-T	From A1XA7-T
17	Reset	From A1XA7-T	From A1XA7-T	Not used
18	Ground			
19	-12 v	From A1XA1-20	From A1XA1-20	From A1XA1-20
22	+12 v	From A1XA1-15	From A1XA1-15	From A1XA1-15

REF DESIG PREFIX A1A2, A1A3, A1A4

Figure 5-39. Frequency Dividers A1A2, A1A3, and A1A4, Location of Parts

PARTS LOCATION INDEX AND NOTES FOR FIGURE 5-40

REF. DESIG.	DRAWING LOCATION
C1	1B
C2	2C
C3	7B
C4	6B
C5	6B
C6	6B
C7	5B
C8	5B
C9	5B
C10	5B
C11	4B
C12	3B
C13	4B
C14	3B
C15	3B
C16	1B
C17	2B
C18	3B
C19	2B
C20	1B
C21	7D
C22	6D
C23	5C
C24	5D
C25	4D
C26	6E
C27	4E
C28	4C
C29	3D
C30	3E
C31	2D
CR1	6B
CR2	7B
CR3	5B
CR4	6B
CR5	5B
CR6	5B
CR7	5B
CR8	4B
CR9	3B
CR10	4B
CR11	4B
CR12	4B
CR13	3B
CR14	3B
CR15	3B
CB16	3B
CR17	1B
CR18	2B
CR19	6D

REF. DESIG.	DRAWING LOCATION
CR20	4D
CR21	3D
CR22	3D
CR23	3D
CR24 (NOTE 1)	4D
E1	7C
E2	4D
E3	2D
E4	2B
E5 (NOTE 1)	4E
Q1	7C
Q2	6C
Q3	5C
Q4	4C
Q5	4C
Q6	3C
Q7	3C
Q8	2C
Q9	7C
Q10	6C
Q11	5D
Q12	5D
Q13	4D
Q14	4D
Q15	3D
Q16	2C
Q17	1C
R1	6B
R2	6B
R3	6B
R4	7B
R5	6C
R6	6C
R7	6B
R8	6B
R9	6B
R10	5B
R11	5B
R12	5B
R13	5C
R14	5B
R15	5B
R16	5B
R17	4B
R18	4B
R19	3B
R20	3B
R21	3C
R22	3C
R23	3B

REF. DESIG.	DRAWING LOCATION
R24	3B
R25	3B
R26	3B
R27	1B
R28	2B
R29	2C
R30	2C
R31	2C
R32	2B
R33	2B
R34	2B
R35	6D
R36	6C
R37	6D
R38	6C
R39	6D
R40	5C
R41	5C
R42	5D
R43	5C
R44	5D
R45	4C
R46	5D
R47	4D
R48	4C
R49	6B
R50	5D
R51 (NOTE 1)	5E
R52	4E
R53	4E
R54	4D
R55 (NOTE 1)	4D
R56	3C
R57	3C
R58	3D
R59	4E
R60	3E
R61	4E
R62	2D
R63	2C
R64	2D
R65	2C
R66	1D
R67	2D
R68	6D
TP1	7C
TP2	4D
TP3	2D
TP4	2B

NOTE

1. R51 supplied and CR24 and E5 not supplied on counters with serial No. A4 through A13, A15, A17, A18, A20, A21, A22, A24 through A28, A30, A31, A33, and A36. On those counters, R55 is connected between CR21 and CR20, and pin 13 is connected to A1S2-7.

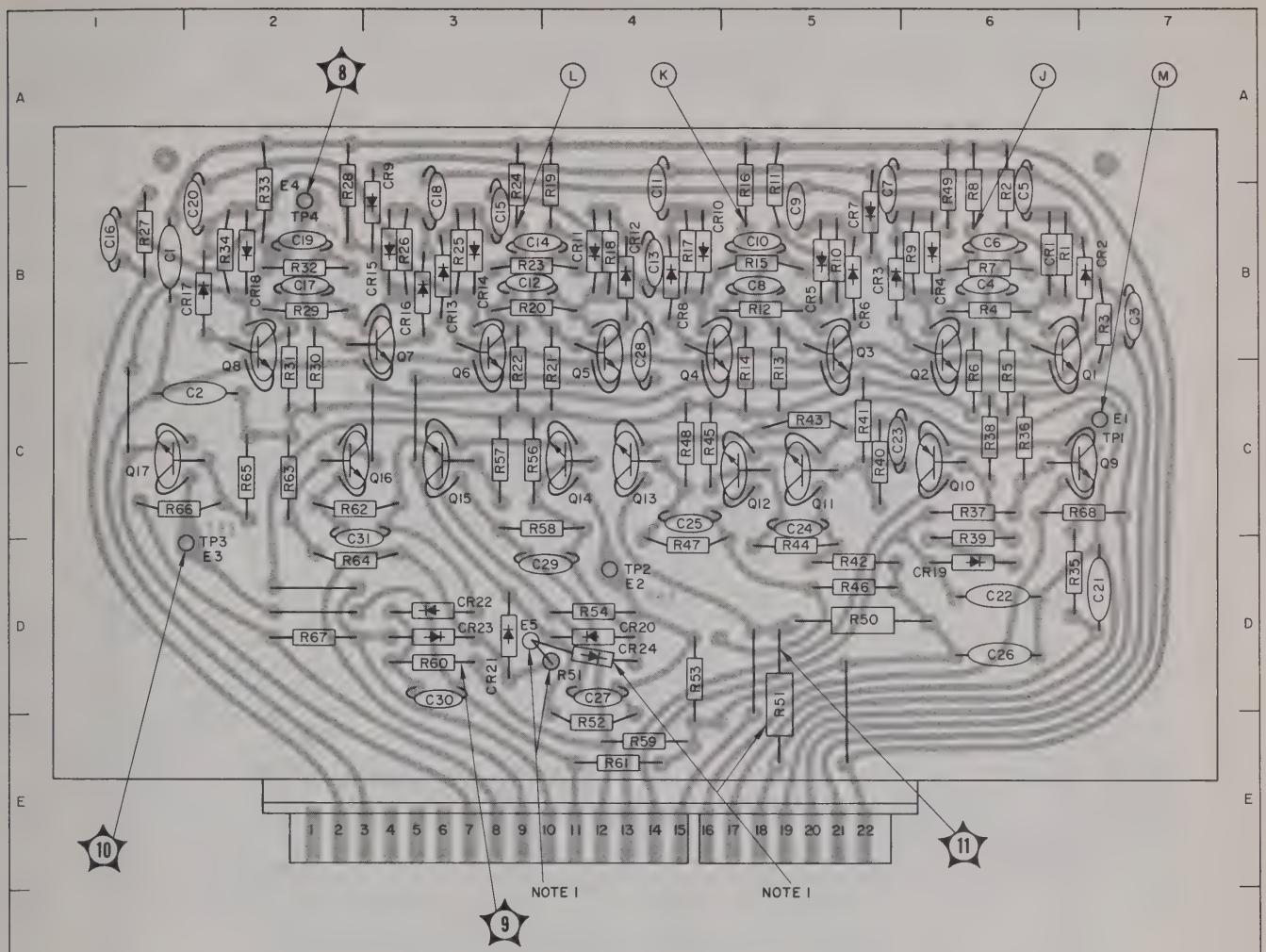

PIN	SIGNAL	CONNECTION
2	100-kc standard frequency	To A1S2-2
3	Ground	
7	Divider signal	To A1SA4-9
8	100-kc time base select (T7)	From A1S3C-2
9	1-mc time base select (T8)	From A1S3C-3
10	Ground	
11	Time base signal	From A1XA2-11, A1XA3-11, A1XA4-11
12	Selected clock signal	To A1XA8-12, A1XA10-14
13	Selected standard frequency	From A1CR6-A1C44 (Note 1)
14	Scale "A" select (F9)	From A1S4I-12
15	Standard frequency or scale out	To A1J7
16	Scaled count signal	From A1XA12-20, A1XA13-20, A1XA14-20, A1XA15-20, A1XA16-20, A1XA17-20, A1XA18-20, A1XA19-10
17	+12 vdc	From A1XA1-15
18	Ground	
19	-12 vdc	From A1XA1-20
20	1-mc standard frequency	To A1S2-3
21	1-mc standard frequency	From A1XA6-12
22	+12 vdc	From A1XA1-18

REF DESIG PREFIX A1A5

Figure 5-40. Frequency Divider A1A5, Location of Parts

PARTS LOCATION INDEX FOR FIGURE 5-41

REF. DESIG.	DRAWING LOCATION
C1	6F
C2	6E
C3	7E
C4	6E
C5	7D
C6	6C
C7	6C
C8	6D
C9	5E
C10	6D
C11	5D
C12	5D
C13	5D
C14	4D
C15	5E
C16	5E
C17	3F
C18	3F
C19	2F
C20	3E
C21	3E
C22	3E
C23	2E
C24	3D
C25	3D
C26	3D
C27	2D
C28	2D
C29	2D
C30	1D
C31	2E
C32	1E
C33	2F
C34	7E
C35	6C
C36	5C
C37	4C
C38	4E
C39	6E

REF. DESIG.	DRAWING LOCATION
C40	3D
C41	3C
C42	2C
C43	2C
C44	1F
C45	5D
C46	1D
C47	3D
C48	2D
C49	2D
CR1	7E
CR2	7E
CR3	6D
CR4	5E
CR6	4E
CR7	3E
CR8	3E
CR9	3E
CR10	3D
CR11	1D
CR12	1E
E1	6C
E2	5C
E3	5C
E4	1C
E5	2F
L1	7C
L2	6C
L3	5C
L4	4C
L5	3E
L6	3C
L7	2C
L8	1C
Q1	6E
Q2	6E
Q3	6E
Q4	6D
Q5	6E

REF. DESIG.	DRAWING LOCATION
Q6	6D
Q7	5D
Q8	5D
Q9	4E
Q10	4D
Q11	4F
Q12	3F
Q13	3E
Q14	3D
Q15	2D
Q16	2D
Q17	1E
Q18	1E
Q19	1E
Q20	1F
R1	6F
R2	6F
R3	7E
R4	7F
R5	7E
R6	7E
R7	6E
R8	7E
R9	7D
R10	7D
R11	7D
R12	6D
R13	6E
R14	6D
R15	5E
R16	5D
R17	5E
R18	5E
R19	5D
R20	5E
R21	5E
R22	5E
R23	4D
R24	4E

REF. DESIG.	DRAWING LOCATION
R25	5F
R26	5F
R27	4F
R28	3F
R29	3F
R30	3F
R31	3F
R32	3E
R33	3E
R34	3E
R35	3E
R36	3E
R37	3E
R38	3E
R39	3D
R40	3D
R41	3D
R42	2D
R43	2E
R44	2E
R45	2D
R46	2D
R47	2E
R48	1D
R49	2E
R50	1D
R51	2F
R52	2E
R53	2E
R54	2E
R55	1E
R56	2F
R57	5E
TP1	6C
TP2	5C
TP3	5C
TP4	1C
TP5	2F

Note: This sheet applies to A1A6 Model MP25-526L8. See Sheet 2 for all other A1A6 Models.

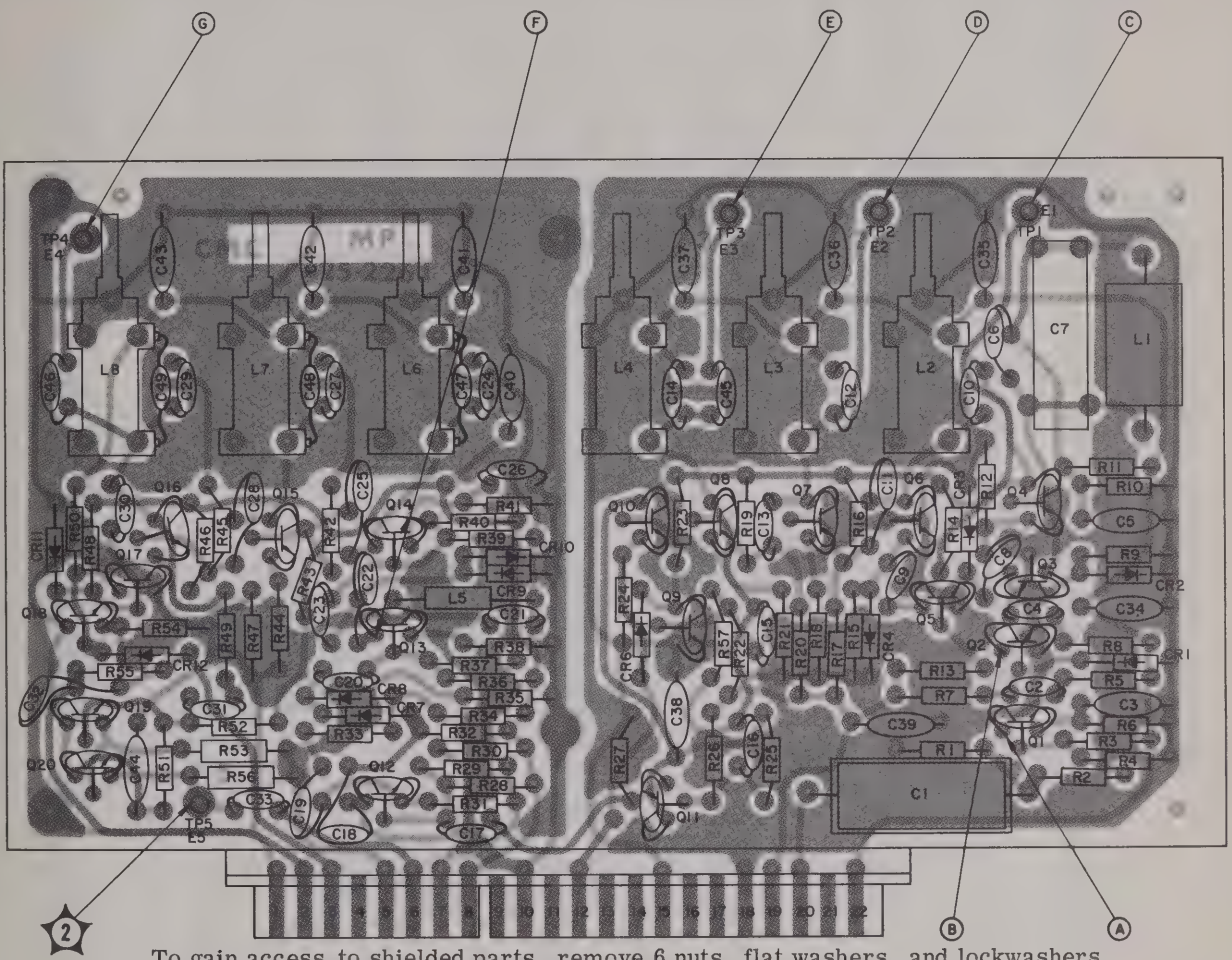

To gain access to shielded parts, remove 6 nuts, flat washers, and lockwashers which fasten shield MP1 (figure 5-2).

PIN	SIGNAL	CONNECTION
1	Ground	
2	10-mc standard frequency	To A1S2-4
3	10-mc test signal	To A1XA8-16*
5	Ground	
6	10-mc standard frequency	To A1J9-16
7	-12 v	From A1XA1-20
8	+12 v	From A1XA1-15
10	Ground	
12	1-mc standard frequency	To A1XA5-20
15	Ground	
18	Ground	
19	-12 v	From A1XA1-20
20	100-kc or 1-mc reference frequency	From A1S13
22	+12 v	From A1XA1-15

*Through A1R49.

REF DESIG PREFIX A1A6

Figure 5-41. Frequency Multiplier A1A6, Location of Parts (Sheet 1 of 2)

PARTS LOCATION INDEX FOR FIGURE 5-41 (SHEET 2)

REF. DESIG.	DRAWING LOCATION
C1	6F
C2	6E
C3	7E
C4	6E
C5	7D
C6	6C
C7	6C
C9	5E
C10	6D
C12	5D
C14	4D
C15	5E
C16	5E
C17	3F
C18	3F
C19	2F
C20	3E
C21	3E
C22	3E
C23	2E
C24	3D
C26	3D
C27	2D
C28	2D
C29	2D
C30	1D
C31	2E
C32	1E
C33	2F
C34	7E
C35	6C
C36	5C
C37	4C
C38	4E
C39	6E
C40	3D
C41	3C
C42	2C

REF. DESIG.	DRAWING LOCATION
C43	2C
C44	1F
C45	5D
C46	1D
C47	3D
C48	2D
C49	2D
CR1	7E
CR2	7E
CR3	6D
CR4	5E
CR6	4E
CR7	3E
CR8	3E
CR9	3E
CR10	3D
CR11	1D
CR12	1E
E1	6C
E2	5C
E3	5C
E4	1C
L1	7C
L2	6C
L3	5C
L4	4C
L5	3E
L6	3C
L7	2C
L8	1C
Q1	6E
Q2	6E
Q3	6E
Q4	6D
Q5	6E
Q6	6D
Q7	5D

REF. DESIG.	DRAWING LOCATION
Q8	5D
Q9	4E
Q10	4D
Q11	4F
Q12	3F
Q13	3E
Q14	3D
Q15	2D
Q16	2D
Q17	1E
Q18	1E
Q19	1E
Q20	1F
R1	6F
R2	6F
R3	7E
R4	7F
R5	7E
R6	7E
R7	6E
R8	7E
R9	7D
R10	7D
R11	7D
R12	6D
R13	6E
R14	6D
R15	5E
R16	5D
R17	5E
R18	5E
R19	5D
R20	5E
R21	5E
R22	5E
R23	4D
R24	4E

REF. DESIG.	DRAWING LOCATION
R25	5F
R26	5F
R27	4F
R28	3F
R29	3F
R30	3F
R31	3F
R32	3E
R33	3E
R34	3E
R35	3E
R36	3E
R37	3E
R38	3E
R39	3D
R40	3D
R41	3D
R42	2D
R43	2E
R44	2E
R45	2D
R46	2D
R47	2E
R48	1D
R49	2E
R50	1D
R51	2F
R52	2E
R53	2E
R54	2E
R55	1E
R56	2F
R57	5E
TP1	6C
TP2	5C
TP3	5C
TP4	1C

Note: This sheet applies to A1A6 Model MP25-526L10 or higher "L" number. See Sheet 1 for location of parts on A1A6 Model MP25-526L8.

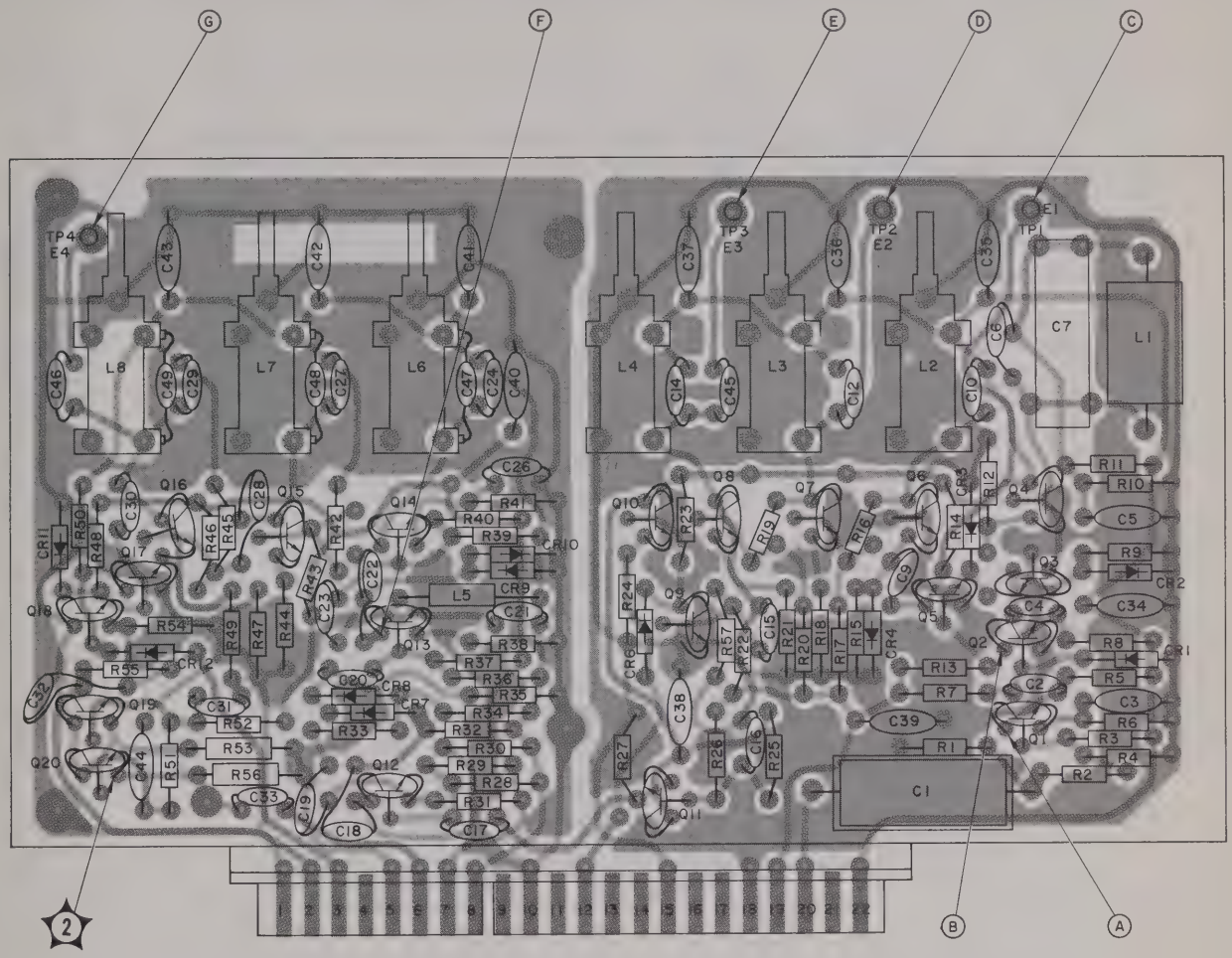

To gain access to shielded parts, remove 6 nuts, flat washers, and lockwashers which fasten shield MP1 (figure 5-2).

PIN	SIGNAL	CONNECTION
1	Ground	
2	10-mc standard frequency	To A1S2-4
3	10-mc test signal	To A1XA8-16*
5	Ground	
6	10-mc standard frequency	To A1J9-16
7	−12 v	From A1XA1-20
8	+12 v	From A1XA1-15
10	Ground	
12	1-mc standard frequency	To A1XA5-20
15	Ground	
18	Ground	
19	−12 v	From A1XA1-20
20	100-kc or 1-mc reference frequency	From A1S13
22	+12 v	From A1XA1-15

*Through A1R49.

REF DESIG PREFIX A1A6

Figure 5-41. Frequency Multiplier A1A6, Location of Parts (Sheet 2 of 2)

PARTS LOCATION INDEX FOR FIGURE 5-42

REF. DESIG.	DRAWING LOCATION	REF. DESIG.	DRAWING LOCATION	REF. DESIG.	DRAWING LOCATION	REF. DESIG.	DRAWING LOCATION
C1	6B	CR18	7C	R5	6C	R32	2D
C2	4B	CR19	6C	R6	6C	R33	2D
C3	4B	CR20	6C	R7	6B	R34	3D
C4	3B	CR21	6B	R8	5C	R35	3D
C5	2B	CR22	2D	R9	5B	R36	3D
C6	1C	E1	7C	R10	5C	R37	3D
C7	1D	E2	7B	R11	5B	R38	4D
C8	2D	E3	2B	R12	4C	R39	3D
C9	4D	E4	3D	R13	4B	R40	6D
C10	4D	E5	5D	R14	4B	R41	5D
C11	1B	Q1	7C	R15	4C	R42	3C
CR1	6B	Q2	6C	R16	4C	R43	5D
CR2	5C	Q3	5C	R17	3C	R44	5D
CR3	4B	Q4	5C	R18	3B	R45	5D
CR4	3B	Q5	4C	R19	3B	R46	5D
CR5	2B	Q6	4C	R20	3B	R47	5D
CR6	2D	Q7	2C	R21	3B	R48	5D
CR7	3D	Q8	2C	R22	2C	R49	4E
CR9	4D	Q9	2D	R23	3C	R50	7C
CR10	4D	Q10	3C	R24	2C	R51	3D
CR11	4D	Q11	3D	R25	2B	R52	4D
CR12	6D	Q12	4C	R26	2B	TP1	7C
CR13	6D	Q13	5D	R27	2B	TP2	7B
CR14	6C	R1	7B	R28	2C	TP3	2B
CR15	6D	R2	5B	R29	2C	TP4	3D
CR16	6C	R3	6B	R30	2D	TP5	5D
CR17	6C	R4	6C	R31	2D		

DESTINATION INFORMATION FOR FIGURE 5-42

PIN	SIGNAL	CONNECTION
1	From decimal point lamp	From A1DS6
2	From decimal point lamp	From A1DS5
3	From decimal point lamp	From A1DS4
5	Print command	To A1J11-v
20	Reset inhibit	To A1J11-S
A	From decimal point lamp	From A1DS9
B	From decimal point lamp	From A1DS7
C	From decimal point lamp	From A1DS8
D	+45 v	From A1XA1-13
E	To GATE lamp	To A1DS2
F	Memory clear set	To A1XA12-6, A1XA13-6, A1XA14-6, A1XA15-6, A1XA16-6, A1XA17-6, A1XA18-6, A1XA19-6
H	Memory transfer	To A1XA12-7, A1XA13-7, A1XA14-7, A1XA15-7, A1XA16-7, A1XA17-7, A1XA18-7, A1XA19-7
J, 8	BCD "1" output	A1J11-g
K, 9	BCD "2" output	To A1J11-c
L, 10	BCD "4" output	To A1J11-b
M, 11	Ground	
N, 12	BCD "8" output	To A1J11-x

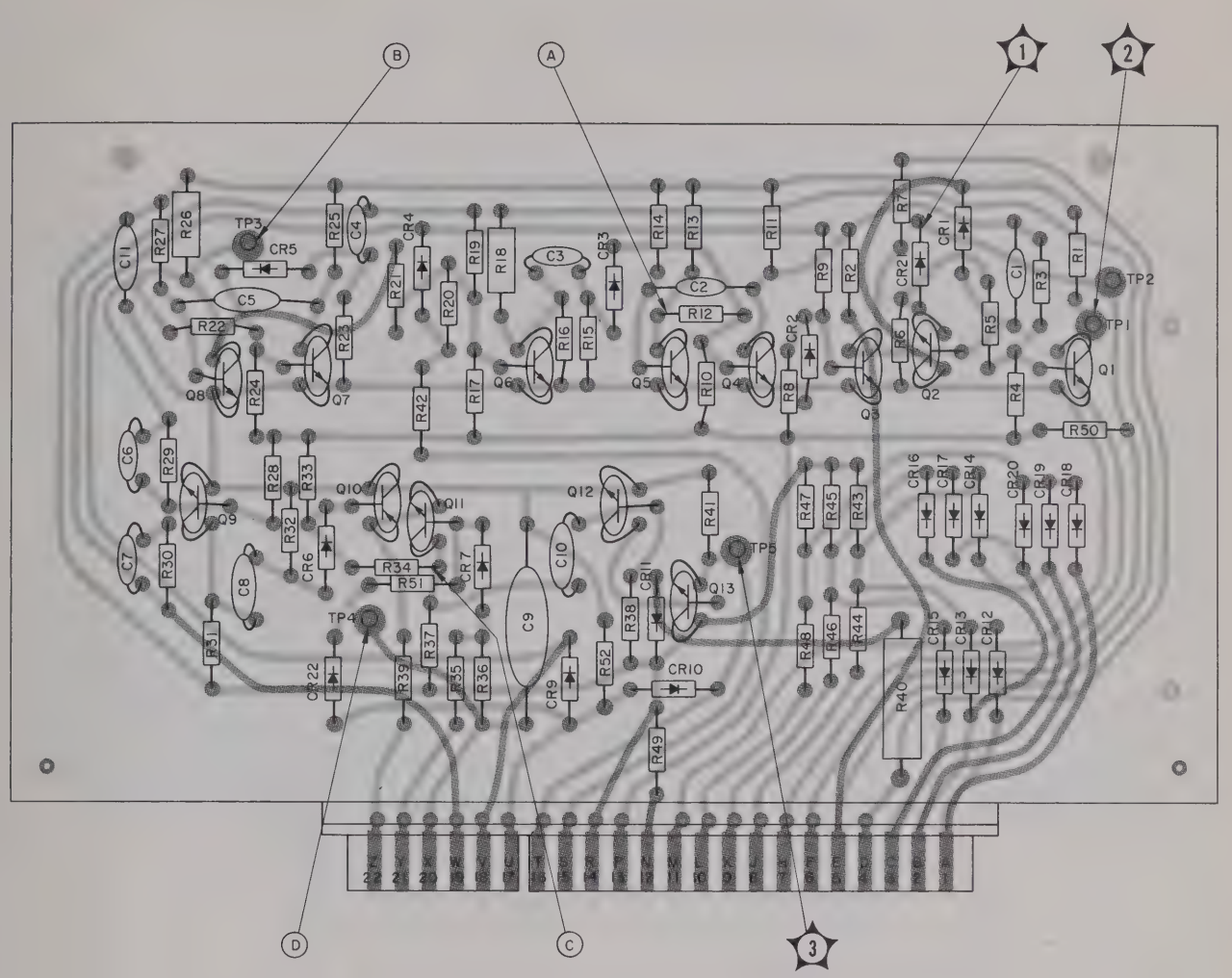

Numbered terminals are on side of board on which parts are mounted.
Lettered terminals are on reverse side.

DESTINATION INFORMATION (Continued)

PIN	SIGNAL	CONNECTION
P	-12 v	From A1XA1-20
R	+12 v	From A1XA1-15
S	Manual gate	From A1XA10-18
T	Reset	To A1XA2-16, A1XA2-17, A1XA3-16, A1XA3-17, A1XA4-15, A1XA4-17, A1XA9-4, A1XA9-14, A1XA10-7, A1XA12-16, A1XA13-16, A1XA14-16, A1XA15-16, A1XA16-16, A1XA17-16, A1XA18-16, A1XA19-16
U	From RESET switch	From A1S6
V	Memory control	From A1S1
W	Gate signal	From A1XA10-1
X	From DISPLAY control	From A1S5
Y	From DISPLAY control	From A1R1
Z	+6 v	From A1XA1-18

REF DESIG PREFIX A1A7

Figure 5-42. Display Control A1A7, Location of Parts

PARTS LOCATION INDEX FOR FIGURE 5-43

REF. DESIG.	DRAWING LOCATION
C1	4E
C2	4E
C3	3D
C4	3E
C5	4D
C6	5C
C7	5E
C8	5D
C9	4B
C10	4B
C11	4C
C12	5B
C13	6B
C14	5B
C15	5B
C16	7B
C17	7B
C18	7C
C19	6E
C20	6C
C21	6D
C22	5D
C23	5C
C24	6E
C25	2E
C26	2E
CR1	4E
CR2	3D
CR3	4D
CR4	3E
CR5	3E
CR6	3E
CR7	3D
CR8	5D
CR9	7C

REF. DESIG.	DRAWING LOCATION
CR10	7D
CR11	7E
CR12	7E
CR13	5D
E5	4B
E6	3B
J1	3B
L1	4C
L2	5E
Q1	4D
Q2	4D
Q3	3D
Q4	3D
Q5	5D
Q6	5D
Q7	5E
Q8	5B
Q9	6C
Q10	7C
Q11	7C
Q12	7D
Q13	6E
Q14	5D
R1	4E
R2	4C
R3	4E
R4	4C
R5	4C
R6	3C
R7	3C
R8	3D
R9	3D
R10	3E
R11	3D
R12	3C
R13	4C

REF. DESIG.	DRAWING LOCATION
R14	4C
R15	4C
R16	5C
R17	5C
R18	5E
R19	5E
R20	5E
R21	5E
R22	5D
R23	5E
R24	6E
R25	4B
R26	5C
R27	4C
R28	5C
R29	5B
R30	6B
R31	6B
R32	6C
R33	6C
R34	7B
R35	6B
R36	6C
R37	7C
R38	6C
R39	6D
R40	6D
R41	6D
R42	6E
R43	6E
R44	6E
R45	5D
TP1	3B
TP2	7D
TP3	5E
TP4	5D

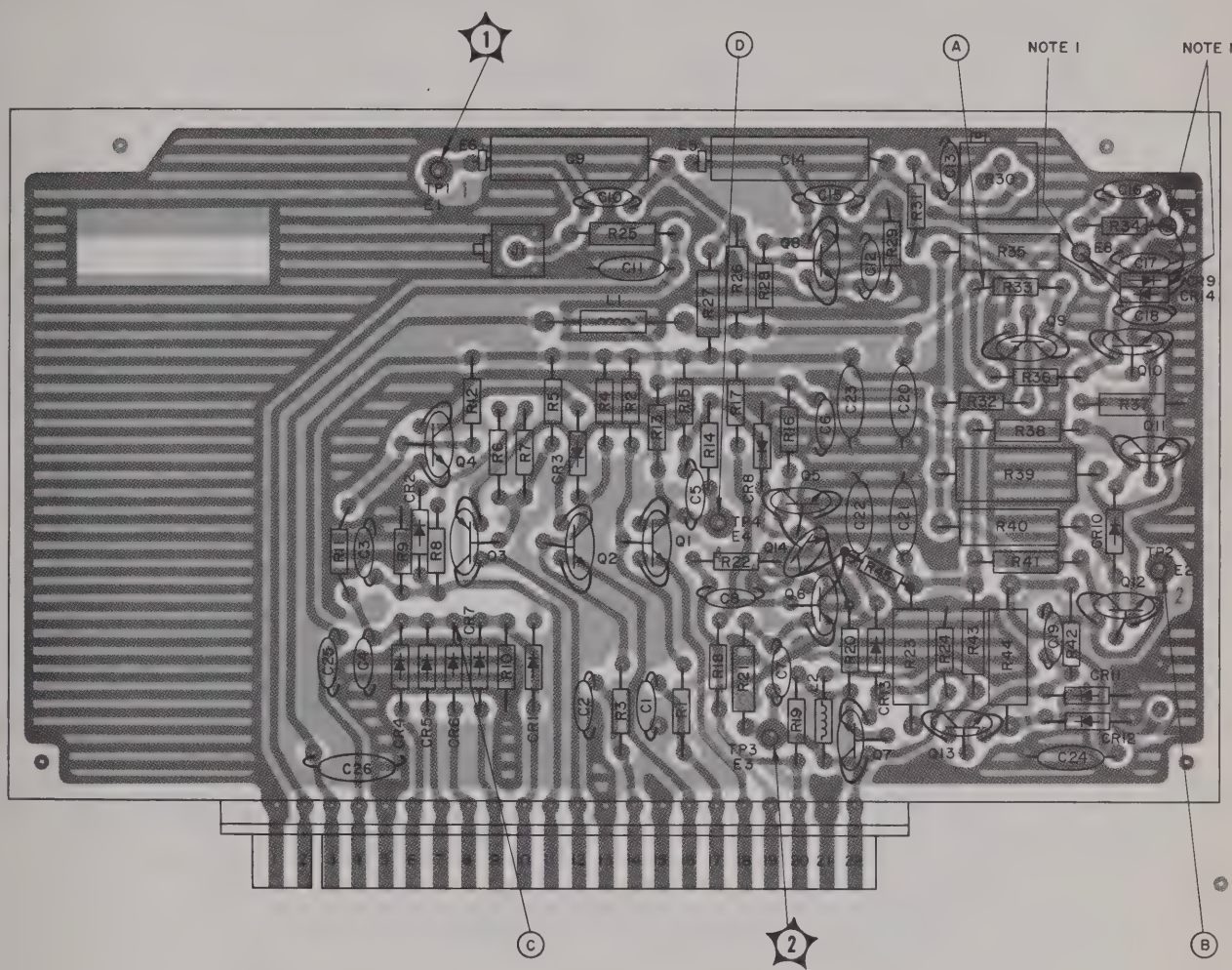

PIN	SIGNAL	CONNECTION
1	Ground	
2	+6.3 v	From A1A20
3	+12 v	From A1XA1-15
4	-12 v	From A1XA1-20
5	Ground	
6	Frequency select (F8)	From A1S4I-11
7	Scale "A" select (F9)	From A1S4I-12
8	Manual start select (F11)	From A1S4I-2
9	Ratio A/B x M select (T10)	From A1S3C-5
10	Combined select	To A1A21S7

PIN	SIGNAL	CONNECTION
11	10-mc time base select (T4)	From A1S3C-4
12	Selected clock signal	From A1XA5-12
13	Ground	
14	Test select	From A1A21S7
15	Ground	
16	10 mc test signal	From A1XA6-3*
17	"C" signal select	From A1A21S7
18	"C" signal	From A1XA11-15
19	+6 v	From A1XA1-18
20	"A" signal select	From A1A21S7
21	Ground	
22	Count signal	To A1XA9-22

*Through A1R49.

Figure 5-43. AF-RF Amplifier A1A8, Location of Parts

PARTS LOCATION INDEX FOR FIGURE 5-44, SHEET 1

REF. DESIG.	DRAWING LOCATION
C1	2E
C2	2E
C3	1E
C4	1D
C5	1C
C6	2C
C7	1D
C8	2B
C9	3B
C10	3C
C11	2D
C12	3C
C13	2D
C14	2C
C15	2B
C16	2B
C17	2B
C18	3E
C19	1D
C20	3E
C21	3B
C22	4E

REF. DESIG.	DRAWING LOCATION
C23	4E
C24	4B
C25	7B
C26	3C
C27	4C
C28	3D
C29	3D
C30	3D
C31	4C
C32	3C
C33	4D
C34	6D
C35	4D
C36	5C
C37	5B
C38	5C
C39	6C
C40	6C
C41	5C
C42	5C
C43	5C
C44	5D

REF. DESIG.	DRAWING LOCATION
C45	5D
C46	5D
C47	6E
C48	6D
C49	6E
C50	6C
C51	6B
C52	5D
C53	7E
C54	4D
C55	5E
C56	6E
E1	6D
E2	2E
E3	1D
Q1	2E
Q2	2E
Q3	2E
Q4	1D
Q5	2C
Q6	2C
Q7	3D

REF. DESIG.	DRAWING LOCATION
Q8	2D
Q9	2C
Q10	3E
Q11	3E
Q12	4E
Q13	4E
Q14	3C
Q15	3C
Q16	4C
Q17	4C
Q18	6C
Q19	6B
Q20	7C
Q21	6C
Q22	6D
Q23	6D
Q24	7E
Q25	6E
Q26	7D
TP1	6D
TP3	2E
TP4	1D

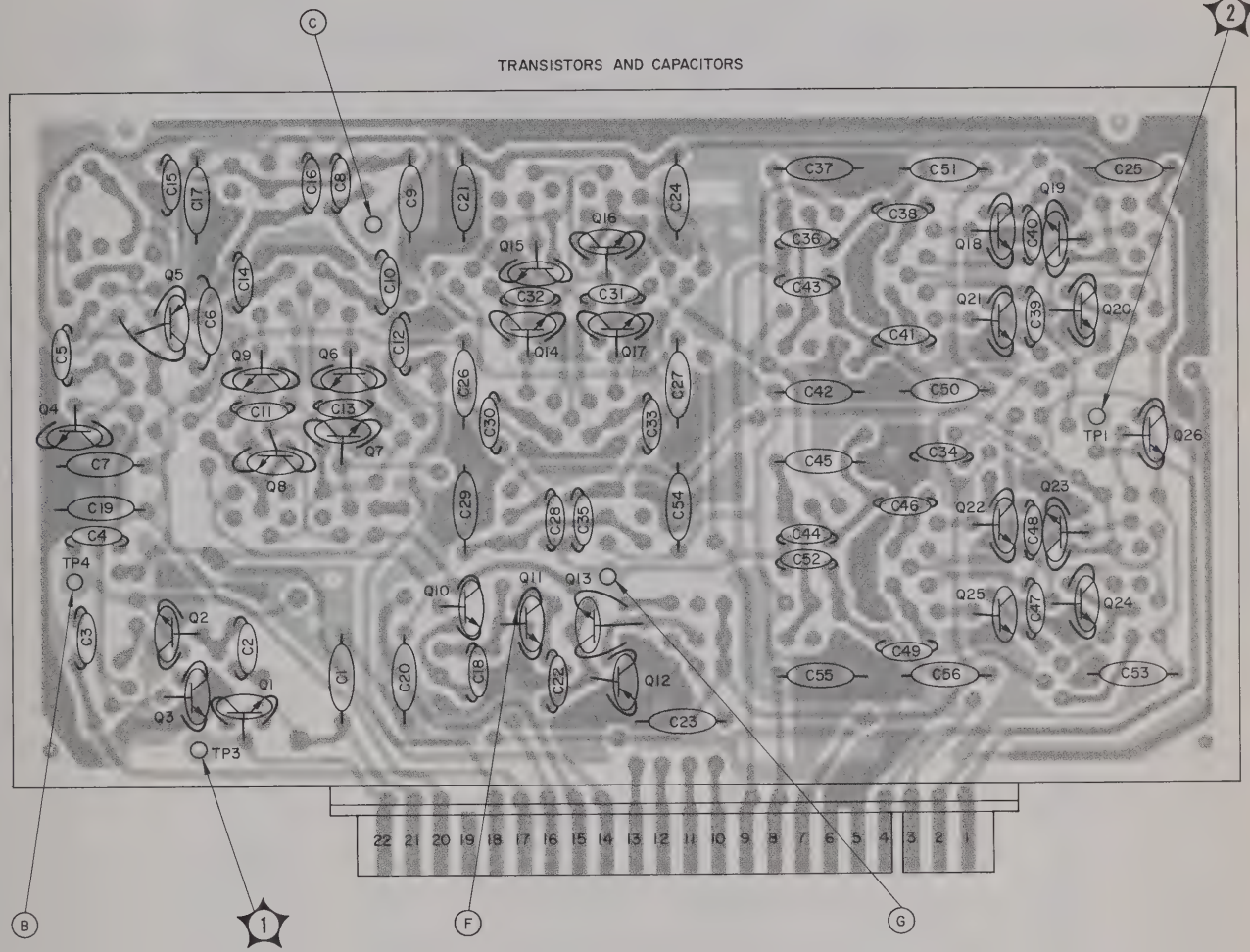

PIN	SIGNAL	CONNECTION
1	Output	To A1XA19-8
2	BCD "4" output	To A1XA19-20
3	BCD "8" output	To A1XA19-22
4	Reset	From A1XA7-T
5	Ground	
6	Ground	
7	-6 v	From A1XA10-21
8	+6 v	From A1XA1-18
9	BCD "2" output	To A1XA19-21

PIN	SIGNAL	CONNECTION
14	Reset	From A1XA7-T
15	BCD "1" output	From A1XA19-19
16	Ground	
17	-6 v	From A1XA10-21
18	+6 v	From A1XA1-18
20	Gate control signal	From A1XA10-22
21	+12 v	From A1XA1-15
22	Count signal	From A1XA8-22

REF DESIG PREFIX A1A9

Figure 5-44. Frequency Divider A1A9, Location of Parts (Sheet 1 of 2)

PARTS LOCATION INDEX FOR FIGURE 5-44, SHEET 2

REF. DESIG.	DRAWING LOCATION
CR1	1D
CR2	1E
CR3	2D
CR4	1C
CR5	2C
CR6	1B
CR7	2B
CR8	1B
CR9	2B
CR10	3B
CR11	3C
CR12	3C
CR13	2C
CR14	2B
CR15	2B
CR16	2C
CR17	2C
CR18	2C
CR19	2B
CR20	2B
CR21	3D
CR22	4E
CR23	4D
CR24	3C
CR25	4D
CR26	3C
CR27	3B
CR28	4B
CR29	4B
CR30	4B
CR31	4B
CR34	4B
CR35	4C
CR36	4C
CR37	5B
CR38	5B
CR39	5B
CR40	6B
CR41	7B
CR42	7B
CR43	7B

REF. DESIG.	DRAWING LOCATION
CR44	7B
CR47	6C
CR48	5C
CR49	5B
CR50	5C
CR51	5C
CR52	5D
CR53	5C
CR54	5D
CR55	7D
CR56	7D
CR57	7D
CR58	7D
CR61	6D
CR62	5D
CR63	5D
L1	1C
L2	1B
L3	3B
L4	3C
L5	2D
L6	2C
L7	2B
L9	3C
L10	3B
L11	4B
L12	4C
L13	6B
L14	7B
L15	6C
L17	6D
L18	6C
L19	7D
L20	6D
R1	2D
R2	2D
R3	2D
R4	1D
R5	2D
R6	2E

REF. DESIG.	DRAWING LOCATION
R7	2C
R8	2C
R9	1B
R10	1B
R11	1B
R12	1B
R13	2B
R14	2B
R15	3B
R16	2B
R17	3C
R18	3D
R19	3D
R20	3C
R21	2B
R22	2D
R23	2D
R24	2B
R25	2D
R26	2B
R27	2B
R28	3E
R29	3D
R30	3E
R31	4D
R32	5D
R33	5D
R34	4D
R35	4D
R36	4D
R37	3D
R38	4C
R39	3B
R40	3B
R41	4C
R42	4B
R43	4B
R44	3B
R45	4C
R46	4B

REF. DESIG.	DRAWING LOCATION
R47	4B
R48	4B
R49	4C
R50	4C
R51	5B
R52	5B
R53	6B
R54	7B
R55	6B
R56	7B
R57	7B
R58	6C
R59	6B
R60	7C
R61	7C
R62	6C
R63	5B
R64	5B
R65	5B
R66	5D
R67	5C
R68	5D
R69	6C
R70	7C
R71	6D
R72	7D
R73	7D
R74	6C
R75	6D
R76	7D
R77	6E
R78	6D
R79	5D
R80	5D
R81	6C
R82	2C
R83	4D
R84	4D
R85	5C
R86	5D

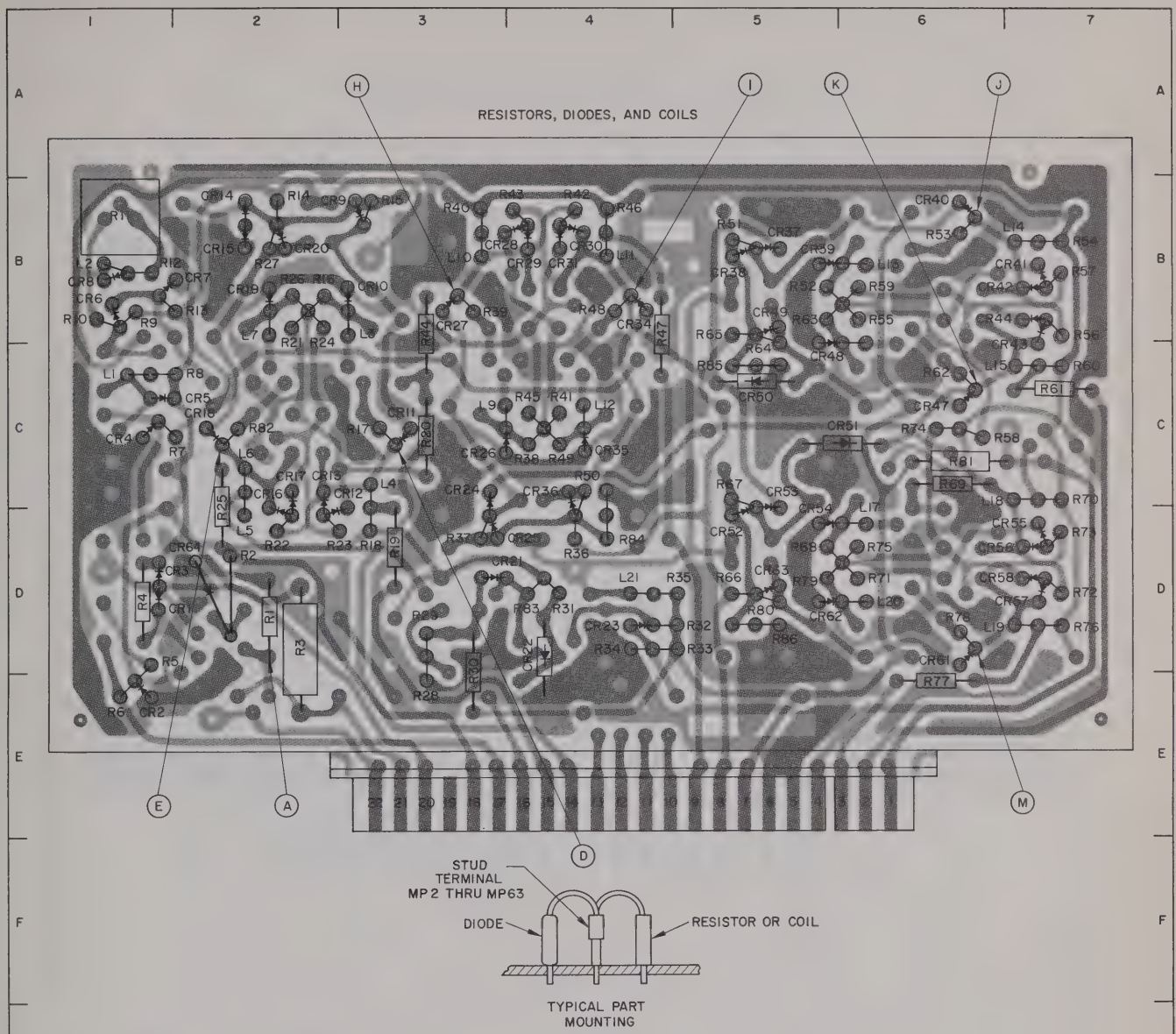

NOTES

On A1A9 boards with part No. MP90-565 marked "L5", the following differences exist from the configuration shown above:

1. L21 is not included. A jumper wire is connected from the point where L21 is shown to R35.
2. CR64 is not included.
3. R2 is mounted horizontally without a jumper at its lower connection.
4. The upper lead from R31 connects to a ground standoff terminal near Q12 instead of to the standoff terminal shown above.

Figure 5-44. Frequency Divider A1A9, Location of Parts (Sheet 2 of 2)

PARTS LOCATION INDEX FOR FIGURE 5-45

REF. DESIG.	DRAWING LOCATION
C1	4C
C2	7B
C3	3D
C4	4E
C5	3D
C6	1D
C7	4C
C8	2D
C9	2C
C10	7D
C11	6D
C12	3C
C13	7C
C14	6D
C15	3C
C16	5E
C17	6C
C18	2C
C19	6D
C20	5D
C21	3C
C22	2C
C24	4C
C25	1B
C26	2E
CR1	3D
CR2	3E
CR3	4E
CR4	4E
CR5	5B
CR6	4D
CR7	3E

REF. DESIG.	DRAWING LOCATION
CR8	2D
CR9	3D
CR10	6D
CR11	6E
CR12	6D
CR13	3B
CR14	4C
CR15	3C
CR16	2C
CR17	2B
CR18	5D
CR20	6D
CR21	6D
CR22	2B
CR23	2B
Q1	4D
Q2	3D
Q3	6B
Q4	4D
Q5	5C
Q6	4B
Q7	2D
Q8	4B
Q9	5C
Q10	2D
Q11	7E
Q12	6E
Q13	3B
Q14	5E
Q15	3B
Q16	5D

REF. DESIG.	DRAWING LOCATION
Q17	2C
Q18	2B
Q19	5E
R1	4D
R2	4E
R3	3D
R4	5B
R5	7B
R6	6B
R7	3D
R8	4E
R9	4D
R10	3E
R11	4D
R12	5C
R13	3D
R14	4C
R15	5B
R16	2E
R17	4C
R18	5B
R19	5B
R20	5C
R21	2D
R22	2D
R23	4C
R24	2D
R25	2D
R26	7D
R27	7D
R28	6E

REF. DESIG.	DRAWING LOCATION
R29	6D
R30	3C
R31	3C
R32	3C
R33	6D
R34	6E
R35	6E
R36	6D
R37	3B
R38	3B
R39	4C
R40	6D
R41	3B
R42	3C
R43	2C
R44	1C
R45	5D
R46	4D
R47	4E
R48	3C
R49	5D
R50	2B
R51	2B
R52	5D
R53	4D
R54	4D
TP1	6C
TP2	5D
TP3	1C
TP4	5D
TP5	2E

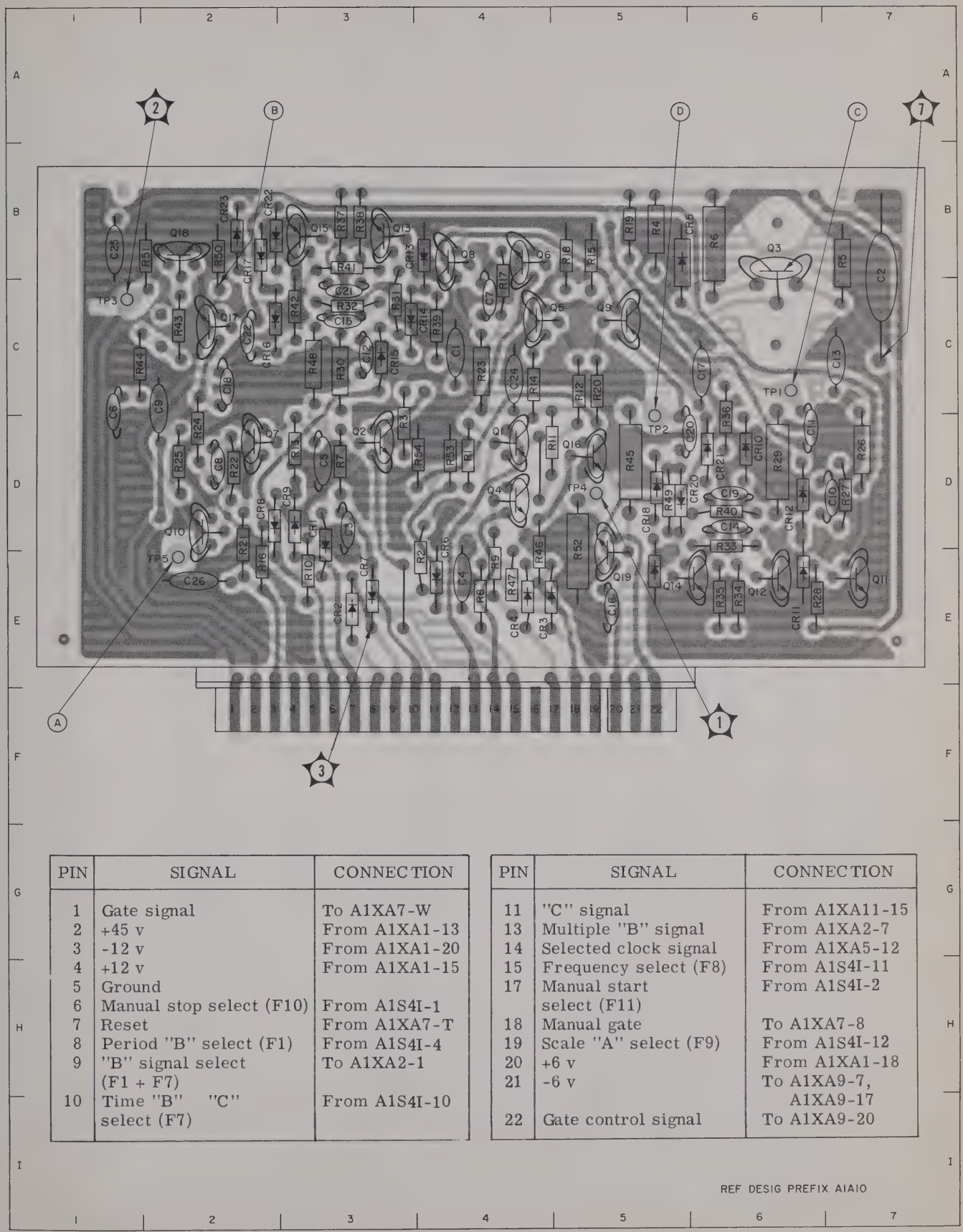

PIN	SIGNAL	CONNECTION
1	Gate signal	To A1XA7-W
2	+45 v	From A1XA1-13
3	-12 v	From A1XA1-20
4	+12 v	From A1XA1-15
5	Ground	
6	Manual stop select (F10)	From A1S4I-1
7	Reset	From A1XA7-T
8	Period "B" select (F1)	From A1S4I-4
9	"B" signal select (F1 + F7)	To A1XA2-1
10	Time "B" "C" select (F7)	From A1S4I-10

PIN	SIGNAL	CONNECTION
11	"C" signal	From A1XA11-15
13	Multiple "B" signal	From A1XA2-7
14	Selected clock signal	From A1XA5-12
15	Frequency select (F8)	From A1S4I-11
17	Manual start select (F11)	From A1S4I-2
18	Manual gate	To A1XA7-8
19	Scale "A" select (F9)	From A1S4I-12
20	+6 v	From A1XA1-18
21	-6 v	To A1XA9-7, A1XA9-17
22	Gate control signal	To A1XA9-20

Figure 5-45. Electronic Gate A1A10, Location of Parts

PARTS LOCATION INDEX FOR FIGURE 5-46

REF. DESIG.	DRAWING LOCATION
C2	5B
C3	5C
C4	6C
C5	7B
C6	7C
C7	7B
C8	6D
C9	5D
C10	5D
C11	6E
C12	5C
C13	5D
C14	7E
C16	3B
C17	3B
C18	2B
C19	2B
C20	1C
C21	1B
C22	2D
C23	3D
C24	3D
C25	2E
C26	3C
C27	4D
C28	1E
CR1	7C
CR2	7B
CR3	6B
CR4	6D
CR5	6D
CR6	6D
CR7	5D
CR8	5C
CR9	5D
CR10	5C

REF. DESIG.	DRAWING LOCATION
CR11	2C
CR12	1B
CR13	2B
CR14	2D
CR15	2D
CR16	2D
CR17	3D
CR18	3C
CR19	3D
CR20	3D
J1	4B
J2	4B
Q1	5B
Q2	5C
Q3	6C
Q4	7C
Q5	7D
Q6	6D
Q7	5D
Q8	5D
Q9	3B
Q10	3C
Q11	2C
Q12	1C
Q13	2D
Q14	2D
Q15	3D
Q16	3D
R1	5C
R2	5C
R3	5C
R4	6B
R5	6C
R6	6B
R7	6B
R8	7E

REF. DESIG.	DRAWING LOCATION
R9	6C
R10	6C
R11	6C
R12	6C
R13	6C
R14	6C
R15	6C
R16	6C
R17	6C
R18	6C
R19	7C
R20	6C
R21	7D
R22	7D
R23	6C
R24	7D
R25	6D
R26	6D
R27	6D
R28	6D
R29	5D
R30	5D
R31	5D
R32	5D
R33	5E
R34	5D
R35	5E
R36	5C
R37	5D
R38	3B
R39	3C
R40	3B
R41	3B
R42	2C
R43	2B
R44	2B

REF. DESIG.	DRAWING LOCATION
R45	1E
R46	2C
R47	2C
R48	2C
R49	2C
R50	2C
R51	3C
R52	2C
R53	2C
R54	2C
R55	2D
R56	1C
R57	2C
R58	1D
R59	1D
R60	2C
R61	1D
R62	3D
R63	2D
R64	2D
R65	3D
R66	3D
R67	3D
R68	3D
R69	3D
R70	3E
R71	3E
R72	3E
R73	3C
R74	3D
TP1	5D
TP2	6D
TP3	7C
TP4	4D
TP5	2D
TP6	1C

Note: This sheet applies to A1A11 Model MP14-546L4. See Sheet 2 for all other A1A11 Models.

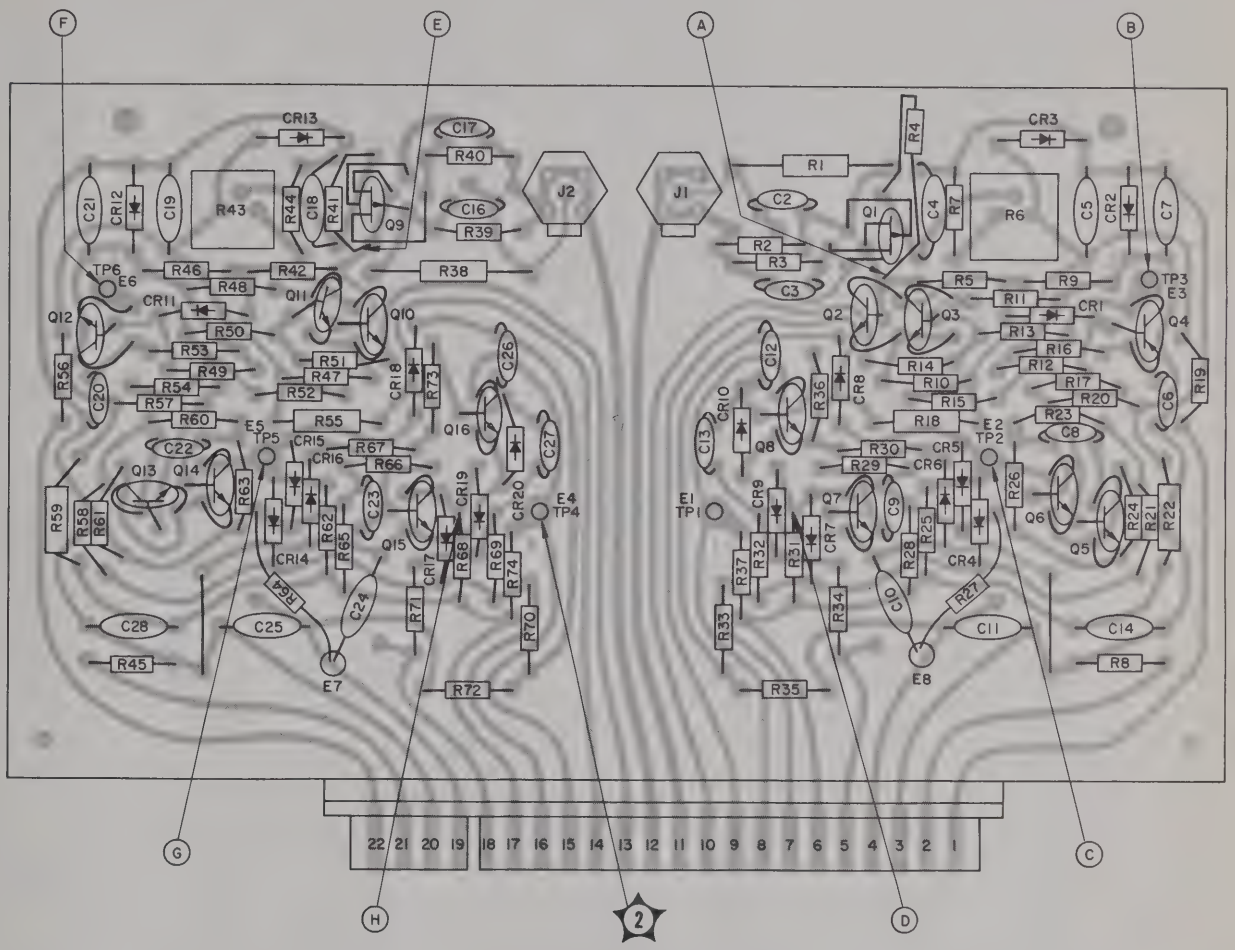

PIN	SIGNAL	CONNECTION
1	To B TRIGGER VOLTS control	To A1A22R33
2	To B TRIGGER VOLTS control	To A1A22R33
3	Ground	
4	To B slope switch	To A1S10
5	To B slope switch	To A1S10
6	+12 v	From A1XA1-15
7	+6 v	From A1XA1-18
8	"B" signal	To A1XA2-13, A1XA3-13, A1XA4-13
9	-12 v	From A1XA1-20
10	To B TRIGGER VOLTS control	To A1A22R33

PIN	SIGNAL	CONNECTION
13	To C TRIGGER VOLTS control	To A1A22R33
14	-12 v	From A1XA1-20
15	"C" signal	To A1XA10-11, A1XA8-18
16	+6 v	From A1XA1-18
17	+12 v	From A1XA1-15
18	To C SLOPE switch	To A1S12
19	To C SLOPE switch	To A1S12
20	Ground	
21	To C TRIGGER LEVEL control	To A1A23R33
22	To C TRIGGER LEVEL control	To A1A23R33

Figure 5-46. AF-RF Amplifier A1A11, Location of Parts (Sheet 1 of 2)

PARTS LOCATION INDEX FOR FIGURE 5-46 (SHEET 2)

REF. DESIG.	DRAWING LOCATION
C1	6C
C2	5B
C3	5C
C4	6C
C5	7B
C6	7C
C7	7B
C8	6D
C9	5D
C10	5D
C11	6E
C12	5C
C13	5D
C14	7E
C15	2C
C16	3B
C17	3B
C18	2B
C19	2B
C20	1C
C21	1B
C22	2D
C23	3D
C24	3D
C25	2E
C26	3C
C27	4D
C28	1E
C29	7D
CR1	7C
CR2	7B
CR3	6B
CR4	6D
CR5	6D
CR6	6D
CR7	5D
CR8	5C
CR9	5D

REF. DESIG.	DRAWING LOCATION
CR10	5C
CR11	2C
CR12	1B
CR13	2B
CR14	2D
CR15	2D
CR16	2D
CR17	3D
CR18	3C
CR19	3D
CR20	3D
CR21	6D
E1	5D
E2	6D
E3	7C
E4	4D
E5	2D
E6	1C
J1	4B
J2	4B
Q1	5B
Q2	5C
Q3	6C
Q4	7C
Q5	7D
Q6	6D
Q7	5D
Q8	5D
Q9	3B
Q10	3C
Q11	2C
Q12	1C
Q13	2D
Q14	2D
Q15	3D
Q16	3D
R1	5C
R2	5C

REF. DESIG.	DRAWING LOCATION
R3	5C
R4	6B
R5	6C
R6	6B
R7	6B
R8	7E
R9	6C
R10	6C
R11	6C
R12	6C
R13	6C
R14	6C
R15	6C
R16	6C
R18	6C
R19	7C
R21	7D
R22	7D
R23	6C
R24	7D
R25	6D
R26	6D
R27	6D
R28	6D
R29	5D
R30	5D
R31	5D
R32	5D
R33	5E
R34	5D
R35	5E
R36	5C
R37	5D
R38	3B
R39	3C
R40	3B
R41	3B
R42	2C

REF. DESIG.	DRAWING LOCATION
R43	2B
R44	2B
R45	1E
R46	2C
R47	2C
R48	2C
R49	2C
R50	2C
R51	3C
R52	2C
R53	2C
R55	2D
R56	1C
R58	1D
R59	1D
R60	2C
R61	1D
R62	3D
R63	2D
R64	2D
R65	3D
R66	3D
R67	3D
R68	3D
R69	3D
R70	3E
R71	3E
R72	3E
R73	3C
R74	3D
R75	7D
TP1	5D
TP2	6D
TP3	7C
TP4	4D
TP5	2D
TP6	1C

Note: This sheet applies to A1A11 Models MP14-546L5 or higher "L" number. See Sheet 1 for A1A11 Model MP14-546L4.

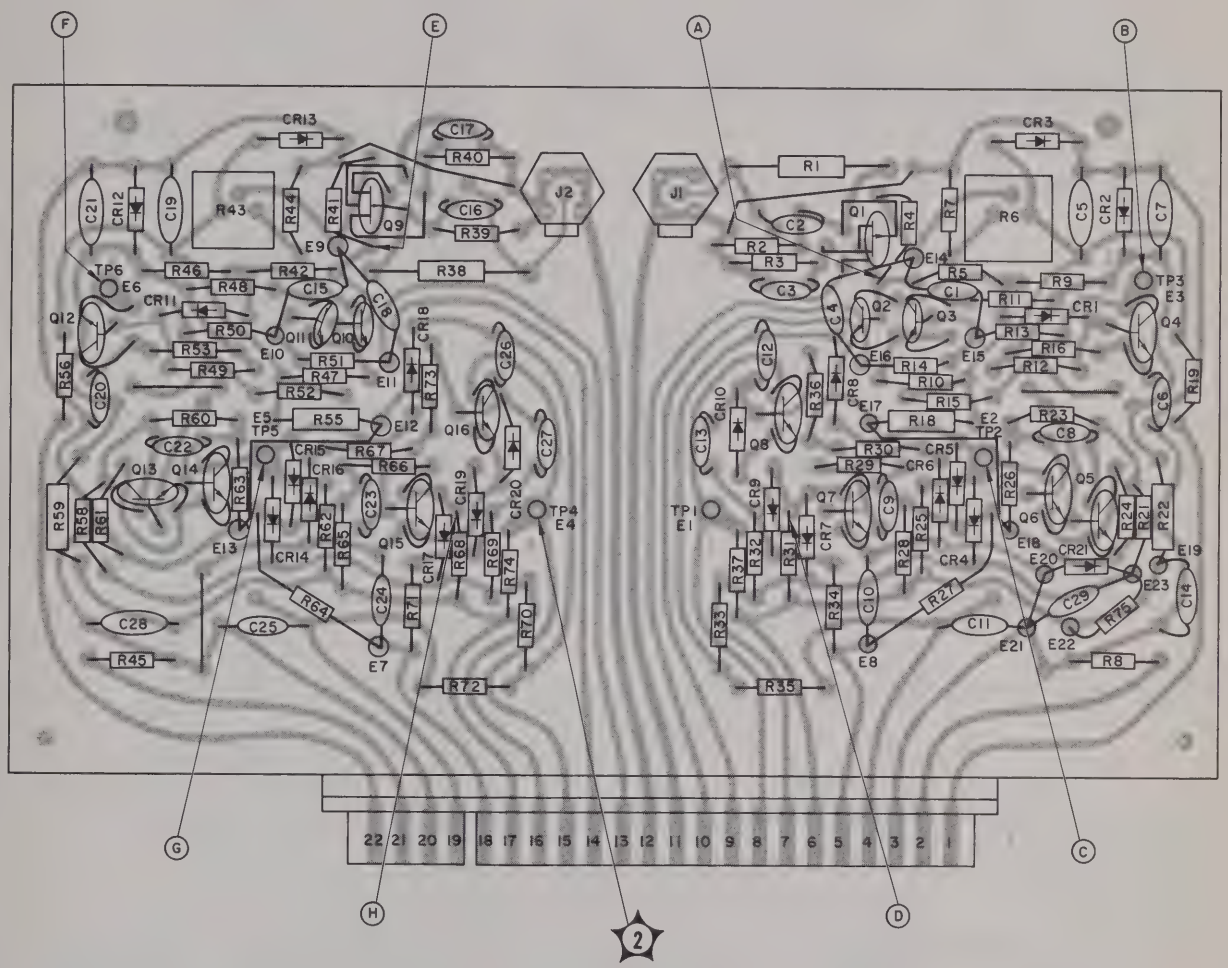

PIN	SIGNAL	CONNECTION
1	To B TRIGGER VOLTS control	To A1A22R33
2	To B TRIGGER VOLTS control	To A1A22R33
3	Ground	
4	To B slope switch	To A1S10
5	To B slope switch	To A1S10
6	+12 v	From A1XA1-15
7	+6 v	From A1XA1-18
8	"B" signal	To A1XA2-13, A1XA3-13, A1XA4-13
9	-12 v	From A1XA1-20
10	To B TRIGGER VOLTS control	To A1A22R33

PIN	SIGNAL	CONNECTION
13	To C TRIGGER VOLTS control	To A1A23R46
14	-12 v	From A1XA1-20
15	"C" signal	To A1XA10-11, A1XA8-18
16	+6 v	From A1XA1-18
17	+12 v	From A1XA1-15
18	To C SLOPE switch	To A1S12
19	To C SLOPE switch	To A1S12
20	Ground	
21	To C TRIGGER LEVEL control	To A1A23R46
22	To C TRIGGER LEVEL control	To A1A23R46

REF DESIG PREFIX A1A11

Figure 5-46. AF-RF Amplifier A1A11, Location of Parts (Sheet 2 of 2)

PARTS LOCATION INDEX FOR FIGURE 5-47

REF. DESIG.	DRAWING LOCATION	REF. DESIG.	DRAWING LOCATION	REF. DESIG.	DRAWING LOCATION	REF. DESIG.	DRAWING LOCATION	REF. DESIG.	DRAWING LOCATION	REF. DESIG.	DRAWING LOCATION	REF. DESIG.	DRAWING LOCATION
C1	4D	CR4	4F	CR25	3C	Q18	3B	R23	3G	R44	4E	R65	3D
C2	4D	CR5	2H	CR26	3B	R1	5F	R24	3G	R45	4D	R66	2E
C3	3D	CR6	2H	E1	2E	R2	5G	R25	2H	R46	4E	R67	2D
C4	3D	CR7	2H	E2	4E	R3	5G	R26	2G	R47	4D	R68	2D
C5	4C	CR8	2H	DS1	6I	R4	5G	R27	3G	R48	4D	R69	2D
C6	4C	CR8	1G	Q1	4F	R5	5F	R28	3G	R49	4D	R70	2D
C7	4C	CR9	3G	Q2	4G	R6	5H	R29	2F	R50	4D	R71	3D
C8	3C	CR10	2H	Q3	4F	R7	4F	R30	2F	R51	3E	R72	3C
C9	3D	CR11	3G	Q4	4G	R8	4G	R31	3F	R52	3D	R73	2C
C10	3D	CR12	2F	Q5	3H	R9	4G	R32	3F	R53	3C	R74	2B
C11	2D	CR13	2F	Q6	1G	R10	4G	R33	2F	R54	4C	R75	3B
C12	3D	CR14	3F	Q7	1G	R11	3F	R34	2F	R55	4C	R76	3C
C13	3C	CR15	3F	Q8	2F	R12	3G	R35	3E	R56	4C	R77	2C
C14	3C	CR16	3E	Q9	2E	R13	5F	R36	3F	R57	4B	R78	2B
C15	2C	CR17	3E	Q10	4E	R16	5F	R37	3G	R58	4B	R79	2B
C16	3C	CR18	3D	Q11	4D	R17	2H	R38	4C	R59	3C	R80	2C
C17	4D	CR19	3C	Q12	4C	R18	2H	R39	2C	R60	4B	R81	2B
C18	4C	CR20	4B	Q13	4C	R19	3H	R40	2E	R61	3B	R82	3B
C19	3B	CR21	3D	Q14	2E	R20	3H	R41	4E	R62	4C	R83	3B
CR1	4G	CR22	3C	Q15	2D	R21	2G	R42	4E	R63	3E	TP1	2E
CR2	4G	CR23	3E	Q16	2C	R22	2G	R43	4E	R64	2E	TP2	4E
CR3	4F	CR24	3D	Q17	2B							XDS1	6I

DESTINATION INFORMATION FOR FIGURE 5-47

PIN	SIGNAL	CONN A1A12	CONN A1A13	CONN A1A14	CONN A1A15	CONN A1A16
1	+180 v	From A1XA1-5	From A1XA1-5	From A1XA1-5	From A1XA1-5	From A1XA1-5
4	+45 v	From A1XA1-13	From A1XA1-13	From A1XA1-13	From A1XA1-13	From A1XA1-13
5	Cathode bias voltage	From A1XA19-5	From A1XA19-5	From A1XA19-5	From A1XA19-5	From A1XA19-5
6	Memory clear set	From A1XA7-F	From A1XA7-F	From A1XA7-F	From A1XA7-F	From A1XA7-F
7	Memory transfer	From A1XA7-H	From A1XA7-H	From A1XA7-H	From A1XA7-H	From A1XA7-H
8	Count signal	From A1XA13-9	From A1XA14-9	From A1XA15-9	From A1XA16-9	From A1XA17-9
9	Count signal	Not used	To A1XA12-8	To A1XA13-8	To A1XA14-8	To A1XA15-8
11	Ground					
12	BCD "1" output	To A1J11- ⓙ	To A1J11-P	To A1J11- ⓗ	To A1J11- ⓩ	To A1J11-F
13	-12 v	From A1XA1-20	From A1XA1-20	From A1XA1-20	From A1XA1-20	From A1XA1-20
14	+12 v	From A1XA1-15	From A1XA1-15	From A1XA1-15	From A1XA1-15	From A1XA1-15
15	BCD "2" output	To A1J11- ⓐ	To A1J11-L	To A1J11- ⓔ	To A1J11 - ⓦ	To A1J11-E
16	Reset	From A1XA7-T	From A1XA7-T	From A1XA7-T	From A1XA7-T	From A1XA7-T
17	BCD "4" output	To A1J11-V	To A1J11-K	To A1J11- ⓓ	To A1J11- ⓣ	To A1J11-D
18	BCD "8" output	To A1J11-R	To A1J11-H	To A1J11-Z	To A1J11- ⓡ	To A1J11-A
20	Scaled count signal	To A1XA5-16	To A1XA5-16	To A1XA5-16	To A1XA5-16	To A1XA5-16
21	Scaled count signal select	From A1S3C-5	From A1S3C-4	From A1S3C-3	From A1S3C-2	From A1S3C-1

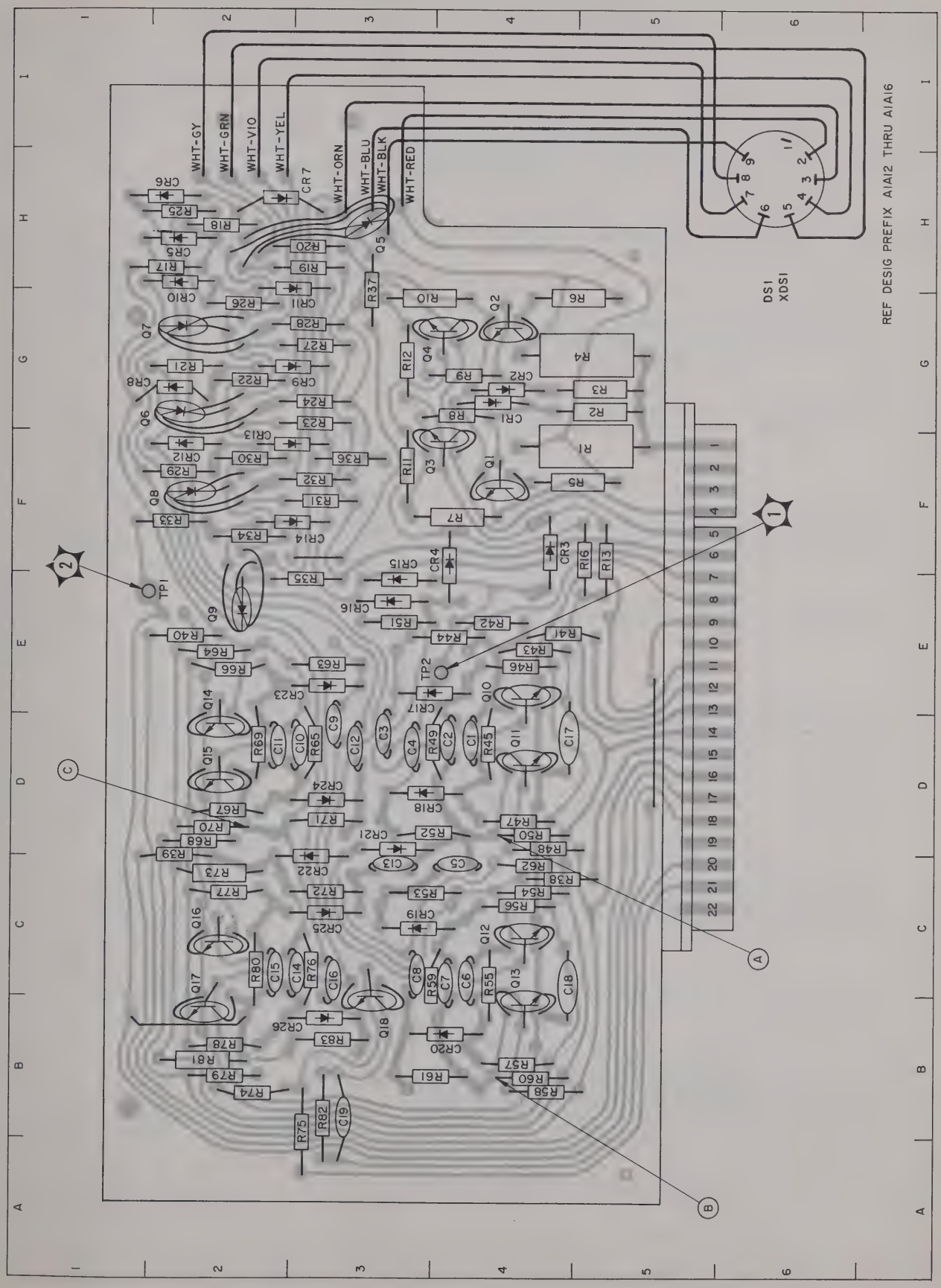

Figure 5-47. Digital Display Indicators - Frequency Dividers A1A12, A1A13, A1A14, A1A15, and A1A16, Location of Parts

PARTS LOCATION INDEX FOR FIGURE 5-48

REF. DESIG.	DRAWING LOCATION	REF. DESIG.	DRAWING LOCATION	REF. DESIG.	DRAWING LOCATION	REF. DESIG.	DRAWING LOCATION	REF. DESIG.	DRAWING LOCATION	REF. DESIG.	DRAWING LOCATION	REF. DESIG.	DRAWING LOCATION
C1	4D	CR6	1H	CR30	4B	Q11	4D	R17	2H	R40	2E	R63	3E
C2	4D	CR7	2H	CR31	2E	Q12	4C	R18	2H	R41	5E	R64	2E
C3	3D	CR8	1G	CR32	3E	Q13	4C	R19	3H	R42	4E	R65	3D
C4	3D	CR9	3G	CR33	2E	Q14	2D	R20	3H	R43	4E	R66	2E
C5	4C	CR10	2G	CR34	2D	Q15	2D	R21	2G	R44	4E	R67	2D
C6	4C	CR11	3G	CR35	3D	Q16	2C	R22	2G	R45	4D	R68	2D
C7	4C	CR12	2F	CR36	2D	Q17	2B	R23	3G	R46	4E	R69	2D
C8	3C	CR13	2F	CR37	2C	Q18	3C	R24	3G	R47	4D	R70	2D
C9	3D	CR14	3F	CR38	3C	R1	5F	R25	2H	R48	5C	R71	3D
C10	3D	CR15	4F	CR39	2C	R2	5G	R26	2G	R49	3D	R72	3C
C11	3D	CR16	3E	CR40	2B	R3	5G	R27	3G	R50	4D	R73	2C
C12	3D	CR17	3E	CR41	2B	R4	5G	R28	3G	R51	3E	R74	2B
C13	3C	CR18	3E	CR42	3B	R5	5F	R29	2F	R52	3D	R75	3B
C14	3C	CR19	4E	DS1	6I	R6	5G	R30	2F	R53	3C	R76	3C
C15	2C	CR20	4D	Q1	4F	R7	4F	R31	3F	R54	4C	R77	2C
C16	3C	CR21	3D	Q2	4G	R8	4G	R32	3F	R55	4C	R78	2B
C17	4D	CR22	3D	Q3	4F	R9	4G	R33	2F	R56	4C	R79	2B
C18	4B	CR23	3C	Q4	4G	R10	4G	R34	2F	R57	4B	R80	2C
C19	3B	CR24	3C	Q5	3H	R11	3F	R35	3E	R58	4B	R81	2B
CR1	4G	CR25	4C	Q6	2G	R12	3G	R36	3F	R59	4C	R82	3B
CR2	4G	CR26	4B	Q7	2G	R13	5F	R37	3H	R60	4B	R83	3B
CR3	5F	CR27	4B	Q8	2F	R16	5F	R38	5C	R61	4B	TP1	1E
CR4	4F	CR28	3C	Q9	2E			R39	2C	R62	4C	TP2	4E
CR5	2H	CR29	2C	Q10	4D							XDS1	6I

DESTINATION INFORMATION FOR FIGURE 5-48

PIN	SIGNAL	CONNECTION	
		A1A17	A1A18
1	+180 v	From A1XA1-5	From A1XA1-5
4	+45 v	From A1XA1-13	From A1XA1-13
5	Cathode bias voltage	From A1XA19-5	From A1XA19-5
6	Memory clear set	From A1XA7-F	From A1XA7-F
7	Memory transfer	From A1XA7-H	From A1XA7-H
8	Count signal	From A1XA18-9	From A1XA19-9
9	Count signal	To A1XA16-8	To A1XA17-8
11	Ground		
12	BCD "1" output	To A1J11-X	To A1J11- ⓤ

PIN	SIGNAL	CONNECTION	
		A1A17	A1A18
13	-12 v	From A1XA1-20	From A1XA1-20
14	+12 v	From A1XA1-15	From A1XA1-15
15	BCD "2" output	To A1J11-U	To A1J11-P
16	Reset	From A1XA7-T	From A1XA7-T
17	BCD "4" output	To A1J11-T	To A1J11- ⓗ
18	BCD "8" output	To A1J11-M	To A1J11- ⓒ
20	Scaled count signal	To A1XA5-16	To A1XA5-16
21	Scaled count signal select	From A1S3C-11	From A1S3C-12

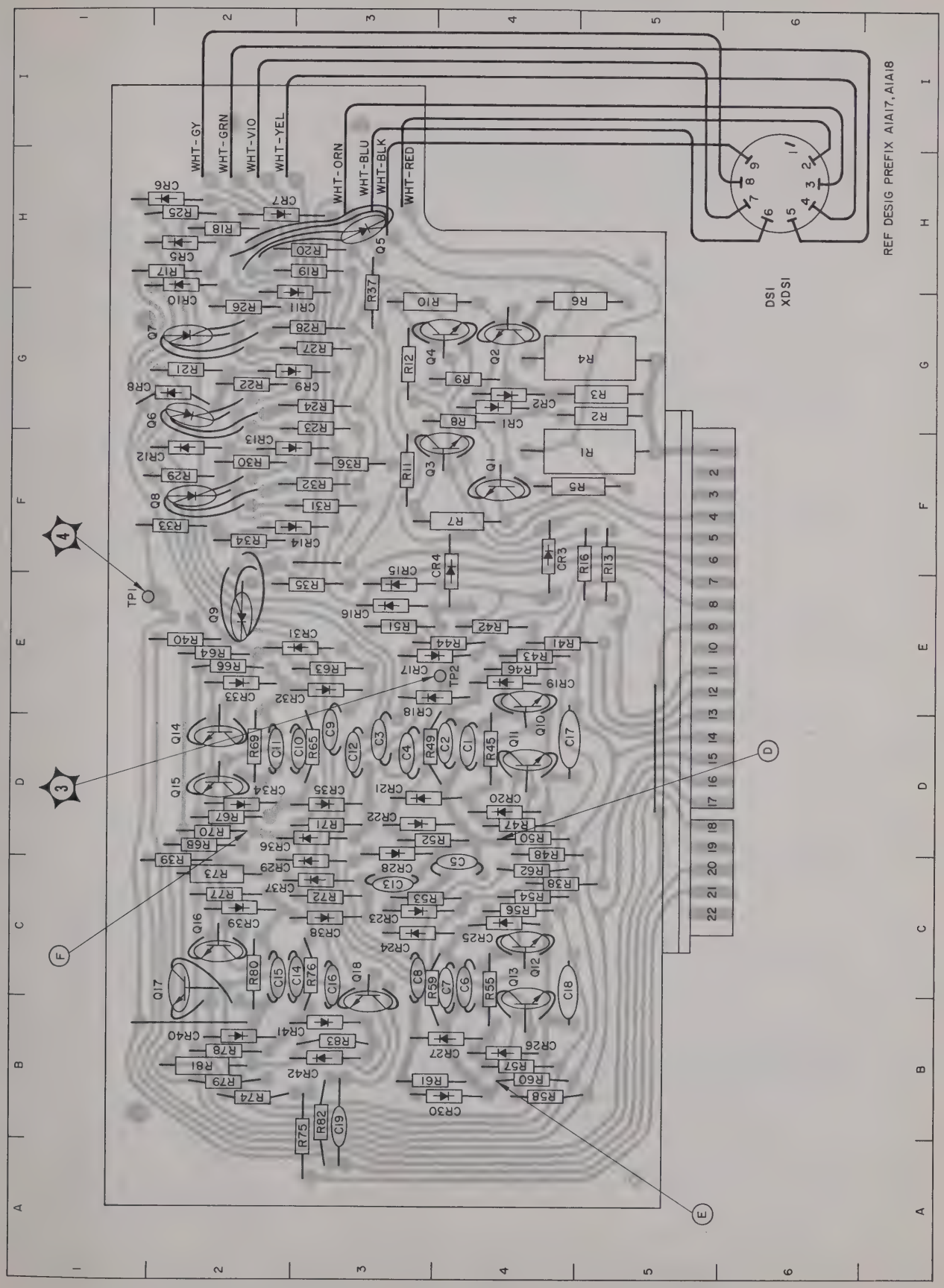

Figure 5-48. Digital Display Indicators - Frequency Dividers A1A17 and A1A18, Location of Parts

PARTS LOCATION INDEX FOR FIGURE 5-49

REF. DESIG.	DRAWING LOCATION
C1	5E
C2	4E
C3	5E
C4	4D
C5	2D
C6	4B
CR1	4F
CR2	4G
CR3	4E
CR4	3E
CR5	2H
CR6	2H
CR7	2H
CR8	2F
CR9	2G
CR10	2G
CR11	3G
CR12	2F
CR13	3F
CR14	3E
CR15	3E

REF. DESIG.	DRAWING LOCATION
CR16	3E
CR17	3D
CR18	4E
CR19	5E
DS1	6I
Q1	4F
Q2	4G
Q3	3F
Q4	4G
Q5	3H
Q6	1G
Q7	2G
Q8	2F
Q9	2E
Q10	4E
Q11	4D
Q12	4D
Q13	4C
Q14	3C
Q15	4B
Q16	3B

REF. DESIG.	DRAWING LOCATION
Q17	2D
Q18	2D
Q19	2C
Q20	2B
R1	5F
R2	5G
R3	5G
R4	5G
R5	5F
R6	5G
R7	4F
R8	4F
R9	4G
R10	4G
R11	3F
R12	3G
R13	4E
R16	4E
R17	2G
R18	2H
R19	3H

REF. DESIG.	DRAWING LOCATION
R20	3H
R21	2G
R22	2G
R23	3F
R24	3F
R25	2H
R26	2G
R27	3G
R28	3G
R29	2F
R30	2F
R31	3F
R32	3F
R33	2E
R34	2E
R35	3E
R36	3E
R37	3G
R38	2C
R39	2D
R40	4B

REF. DESIG.	DRAWING LOCATION
R41	5E
R42	3D
R43	4D
R44	4F
R45	5D
R46	5E
R47	5E
R48	4D
R49	5E
R50	3D
R51	3C
R52	4D
R53	4D
R54	4D
R55	5D
R56	5D
R57	4D
R58	4B
R59	3C
R60	3D
R61	4C

REF. DESIG.	DRAWING LOCATION
R62	4B
R63	3B
R64	3B
R65	4B
R66	3B
R67	2D
R68	2C
R69	3D
R70	2D
R71	2C
R72	2C
R73	2B
R74	2B
R75	2C
R76	2B
TP1	3E
TP2	3D
TP3	3C
TP4	3C
TP5	3C
XDS1	6I

DESTINATION INFORMATION FOR FIGURE 5-49

PIN	SIGNAL	CONNECTION
1	+180 v	From A1XA1-5
3	+6 v	From A1XA1-18
4	+45 v	From A1XA1-13
5	Cathode bias voltage	To A1XA12-5, A1XA13-5, A1XA14-5, A1XA15-5, A1XA16-5, A1XA17-5, A1XA18-5
6	Memory clear set	From A1XA7-F
7	Memory transfer	From A1XA7-H
8	Output	From A1XA9-1
9	Count signal	To A1XA18-8
10	Scaled count signal	To A1XA5-16
11	Ground	

PIN	SIGNAL	CONNECTION
12	BCD "1" output	To A1J11-O
13	-12 v	From A1XA1-20
14	+12 v	From A1XA1-15
15	BCD "2" output	To A1J11-J
16	Scaled "A" frequency select	From A1S3C-10
17	BCD "4" output	To A1J11-I
18	BCD "8" output	To A1J11-G
19	BCD "1" output	From A1XA9-15
20	BCD "4" output	From A1XA9-2
21	BCD "2" output	From A1XA9-9
22	BCD "8" output	From A1XA9-3

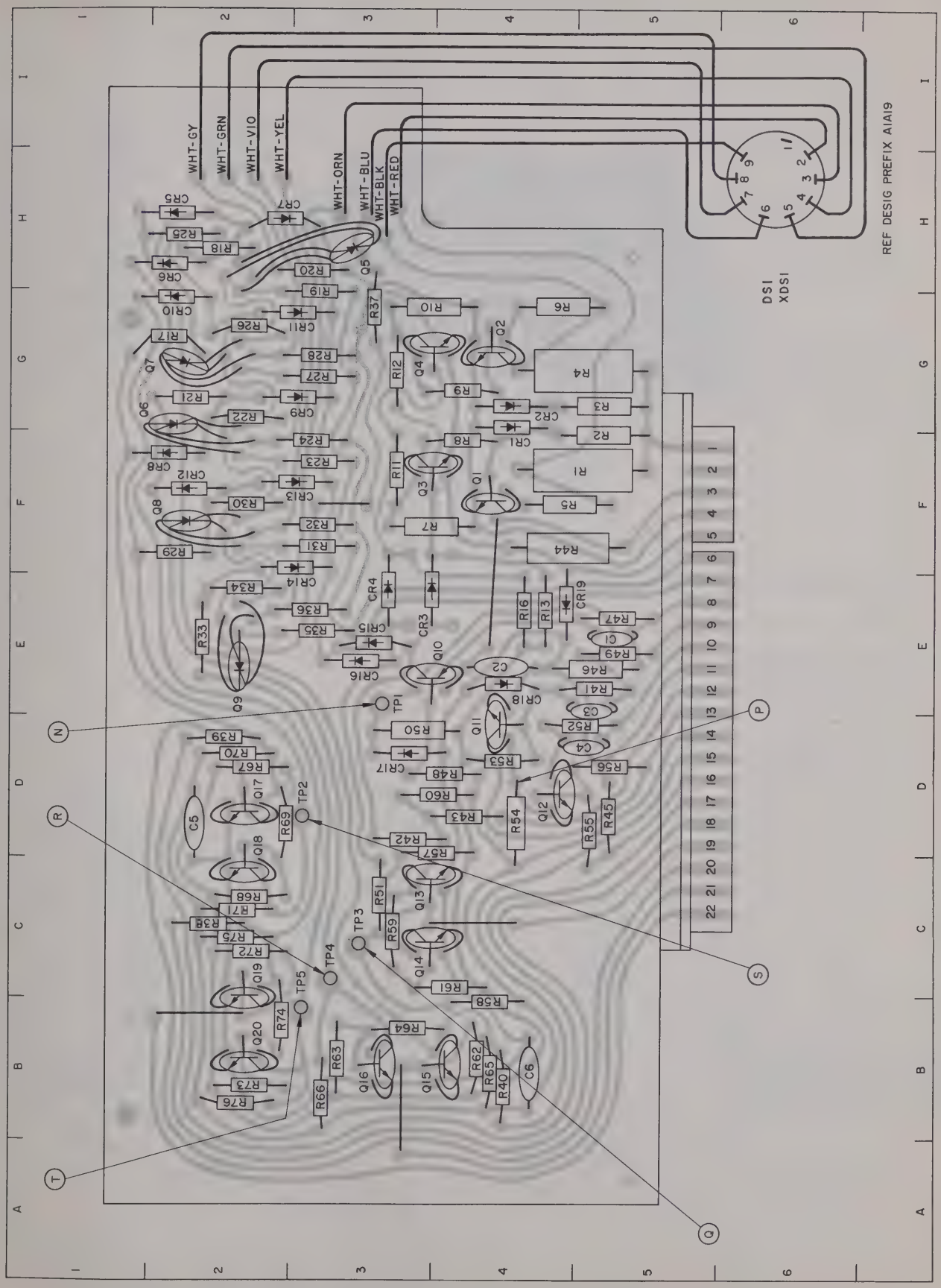

Figure 5-49. Digital Display Indicator - Frequency Divider A1A19, Location of Parts

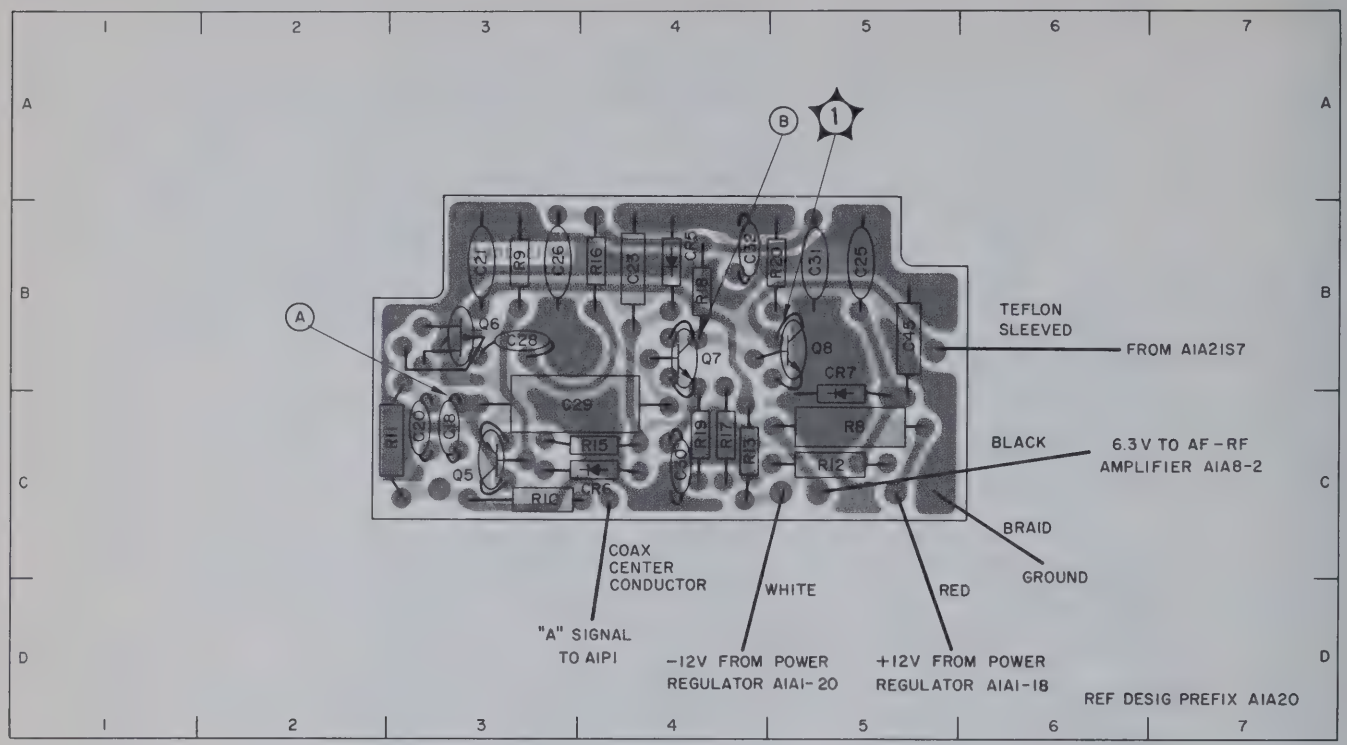

Figure 5-50. AF-RF Amplifier A1A20, Location of Parts

PARTS LOCATION INDEX FOR FIGURE 5-50

REF. DESIG.	DRAWING LOCATION
C18	3C
C20	3C
C21	3B
C23	4B
C25	5B
C26	3B
C28	3B
C29	3C
C30	4C
C31	5B
C32	4B
C45	5B
CR5	4B
CR6	4C
CR7	5B
Q5	3C

REF. DESIG.	DRAWING LOCATION
Q6	3B
Q7	4B
Q8	5B
R8	5C
R9	3B
R10	3C
R11	2C
R12	5C
R13	4C
R15	4C
R16	4B
R17	4C
R18	4B
R19	4C
R20	4B

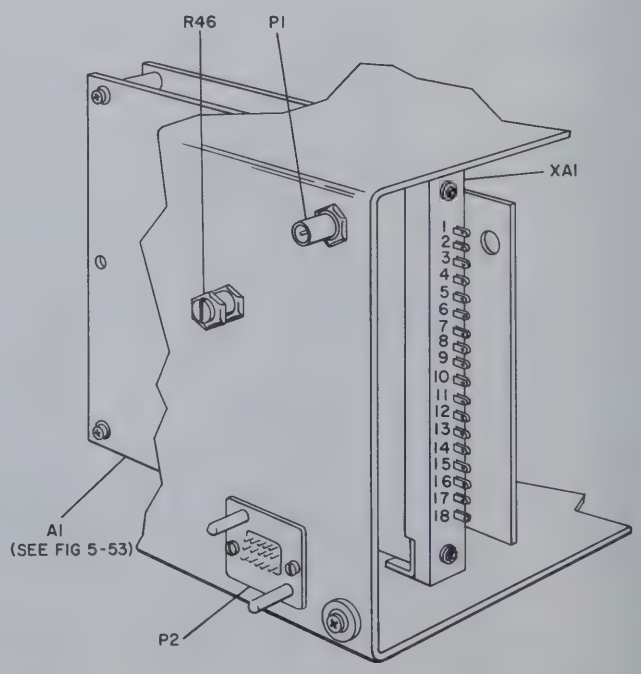

Figure 5-51. Heterodyne Frequency Converter A2 Rear View, Location of Parts

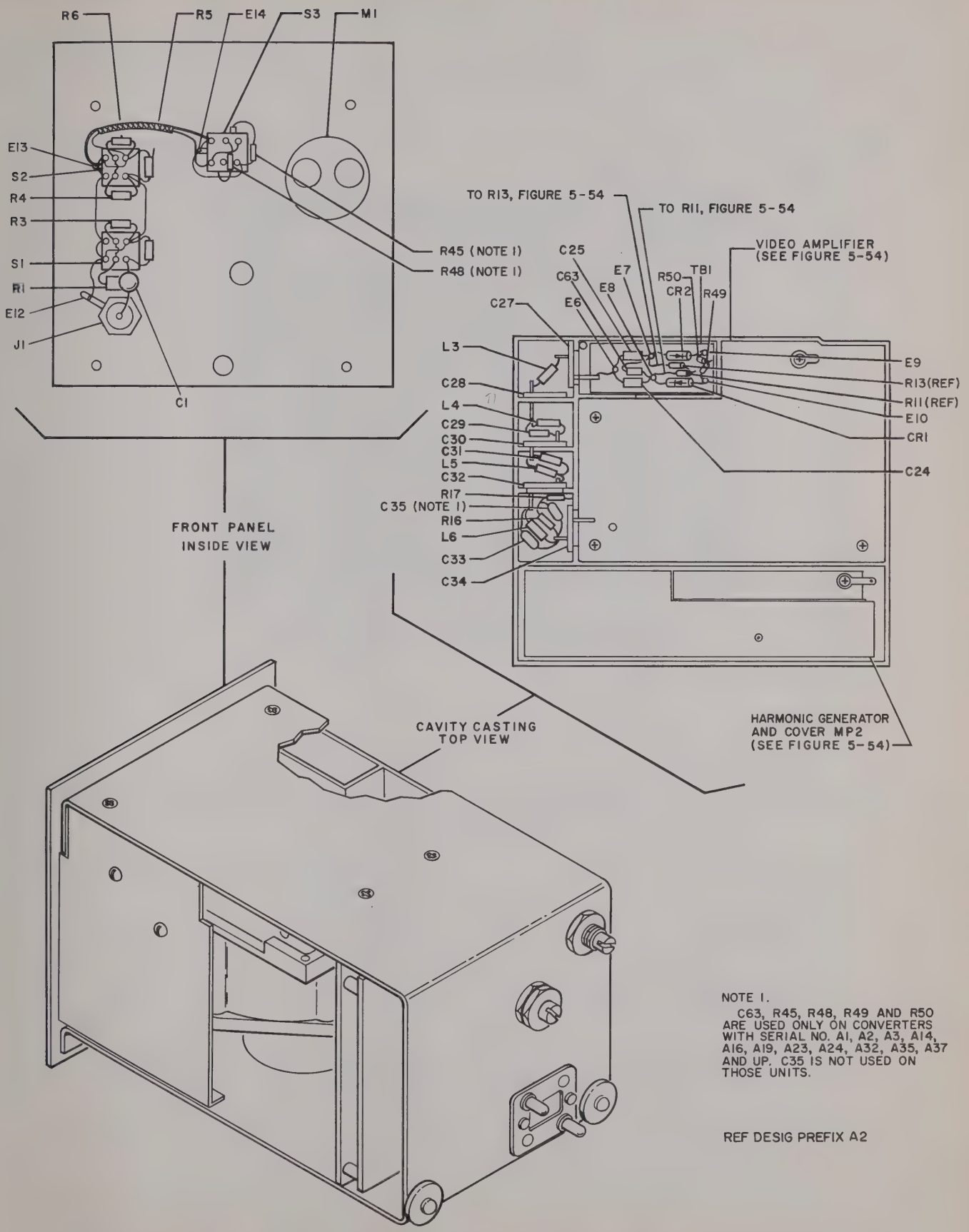

Figure 5-52. Electronic Frequency Converter A2 Top and Front View, Location of Parts

PARTS LOCATION INDEX FOR FIGURE 5-53

REF. DESIG.	DRAWING LOCATION
C1	5D
C2	5D
C3	5C
C4	5B
C5	4C
C7	3C
C8	3C
C9	3D
C10	3C
C11	3D
C12	6C
C13	5B
C14	4D
C15	6D
C16	5C
C17	4D
C18	4D
C19	5D
C20	5D
C21	6D
C22	5D
C23	3D
C24	3D
C25	4C

REF. DESIG.	DRAWING LOCATION
CR1	5C
CR2	6D
L1	3C
L2	3D
L3	3E
L4	5D
L5	5D
L6	4D
Q1	5D
Q2	6C
Q3	4C
Q4	3C
Q5	3D
R1	5C
R2	5C
R3	4C
R4	4C
R5	3C
R6	5D
T1	4D
T2	5C
T3	4C
T4	3C
T5	2D

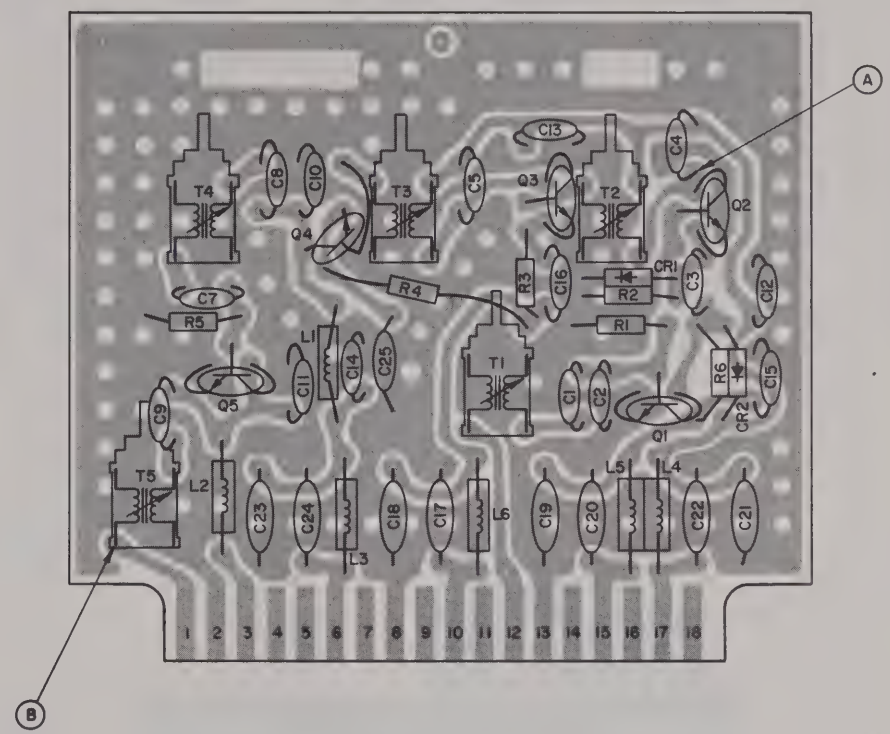

PIN	SIGNAL	CONNECTION
1	50-mc standard frequency	To A2T3
2	Ground	
3	+12 v supply	From A2R46
6	+12 v supply	From A2P2-4, 5
8	Ground	
10	-12 v supply	From A2P2-1, 2
12	10-mc standard frequency	From A3P2-16
13	Ground	
15	+12 v supply	From A2P2-4, 5
17	+6 v supply	From A2P2-6, 7

NOTE 1. On units with A2A1 Model 25-527L3, R4 and C25 are not included, and the emitter of Q4 is connected to ground.

REF DESIG PREFIX A2A1

Figure 5-53. Frequency Multiplier A2A1, Location of Parts

PARTS LOCATION INDEX FOR VIDEO AMPLIFIER (SHEET 1)

REF. DESIG.	PARTS LOCATION
C23	5B
C26	3B
C44	5C
C45	5C
C46	5C
C47	5C
C50	5B
C51	5D
C52	4D
C53	4C
C54	4B
C55	4B
C56	4B
C57	3B
C59	3B
C60	3B
C61	3B

REF. DESIG.	PARTS LOCATION
C62	3C
CR7	3C
CR8	3C
E1	4B
E2	4B
E3	4B
E4	4B
E28	3B
E29	3B
E30	3C
E31	3C
E32	3C
E33	3D
E34	5D
L19	5C
L20	4C

REF. DESIG.	PARTS LOCATION
L25	4C
Q3	5C
Q4	4C
Q5	4C
Q6	3C
Q7	3C
R10	4C
R11	5B
R12	5C
R13	5B
R14	4B
R15	3B
R19	5C
R20	5C
R21	5C
R22	5C

REF. DESIG.	PARTS LOCATION
R23	5C
R28	5C
R30	4C
R31	4C
R32	5D
R33	4C
R34	4C
R35	3B
R36	3B
R37	4C
R38	3B
R39	3B
R40	3C
R41	3C
R43	3C
R89	4C

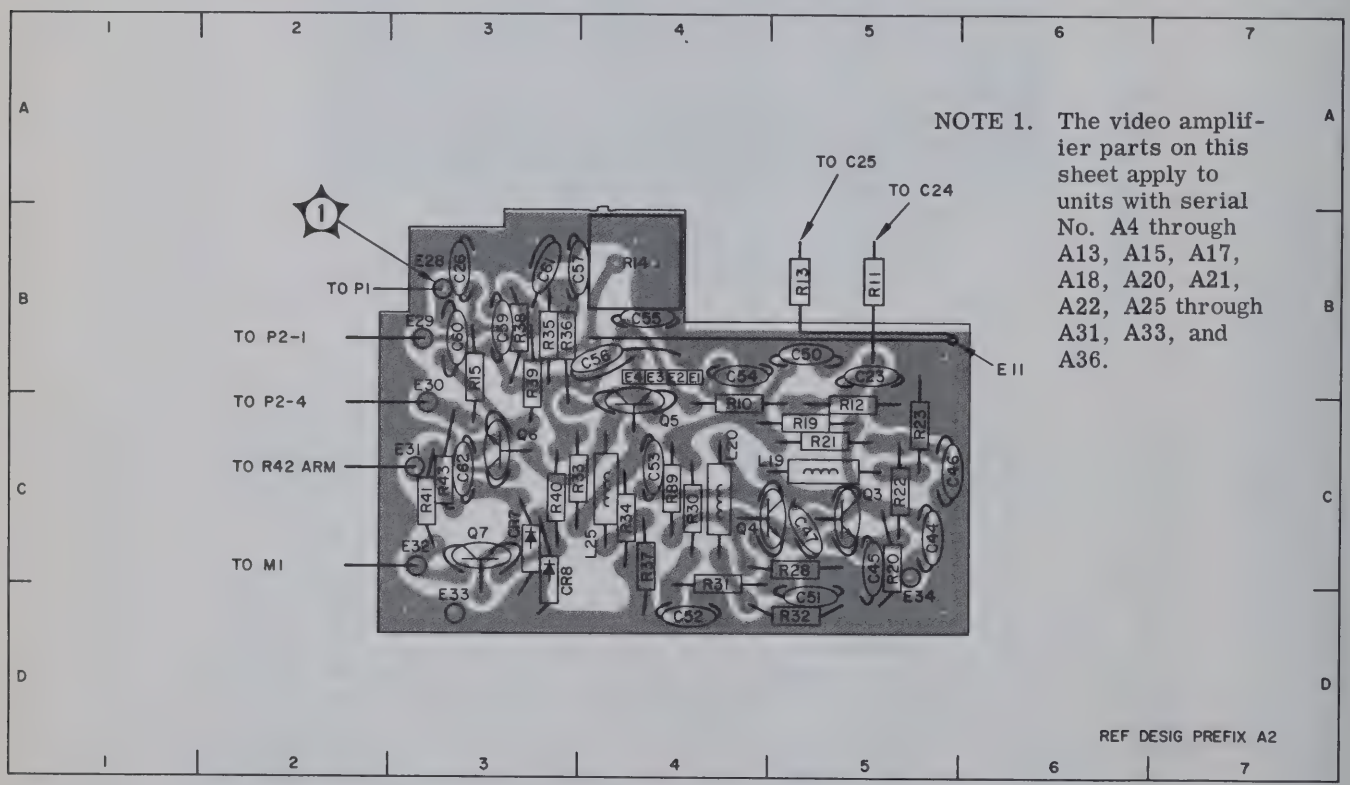

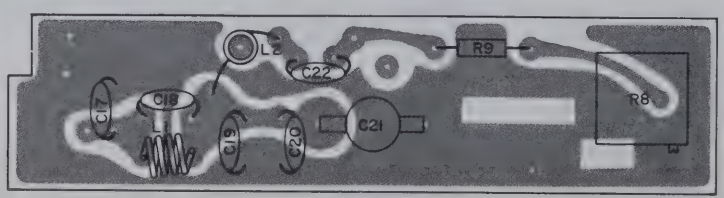

Figure 5-54. Video Amplifier and Harmonic Generator, Location of Parts (Sheet 1 of 2)

PARTS LOCATION INDEX FOR VIDEO AMPLIFIER (SHEET 2)

REF. DESIG.	PARTS LOCATION
C23	5B
C26	3B
C44	4D
C45	5D
C46	5D
C47	4D
C50	5B
C51	5D
C52	4D
C53	4C
C54	4B
C55	4B
C56	4B
C57	3B
C59	3B
C60	3B
C61	3B
C62	3C
C64	2C
C65	2C

REF. DESIG.	PARTS LOCATION
C67	2C
C68	2C
CR7	3C
CR8	3C
CR9	3C
E1	4B
E2	4B
E3	4B
E4	4B
E11	5B
E16	2D
E17	2C
E18	3B
E19	3B
E20	3C
E21	3C
E22	3C
E23	3D
E24	5D
E25	3C

REF. DESIG.	PARTS LOCATION
E26	3C
L19	5D
L20	4D
L25	4C
L26	2C
L27	2C
MP40	2C
MP41	5D
Q3	4D
Q4	4D
Q5	4C
Q6	3C
Q7	3C
R10	4C
R11	5B
R12	5D
R13	5B
R14	4B
R15	3B
R19	5D

REF. DESIG.	PARTS LOCATION
R20	5D
R21	5D
R22	4D
R23	5D
R28	5D
R29	4C
R30	4C
R31	4D
R32	5D
R34	4C
R35	3B
R36	3B
R37	4C
R38	3B
R39	3B
R40	3C
R41	3C
R43	3C
R47	3C

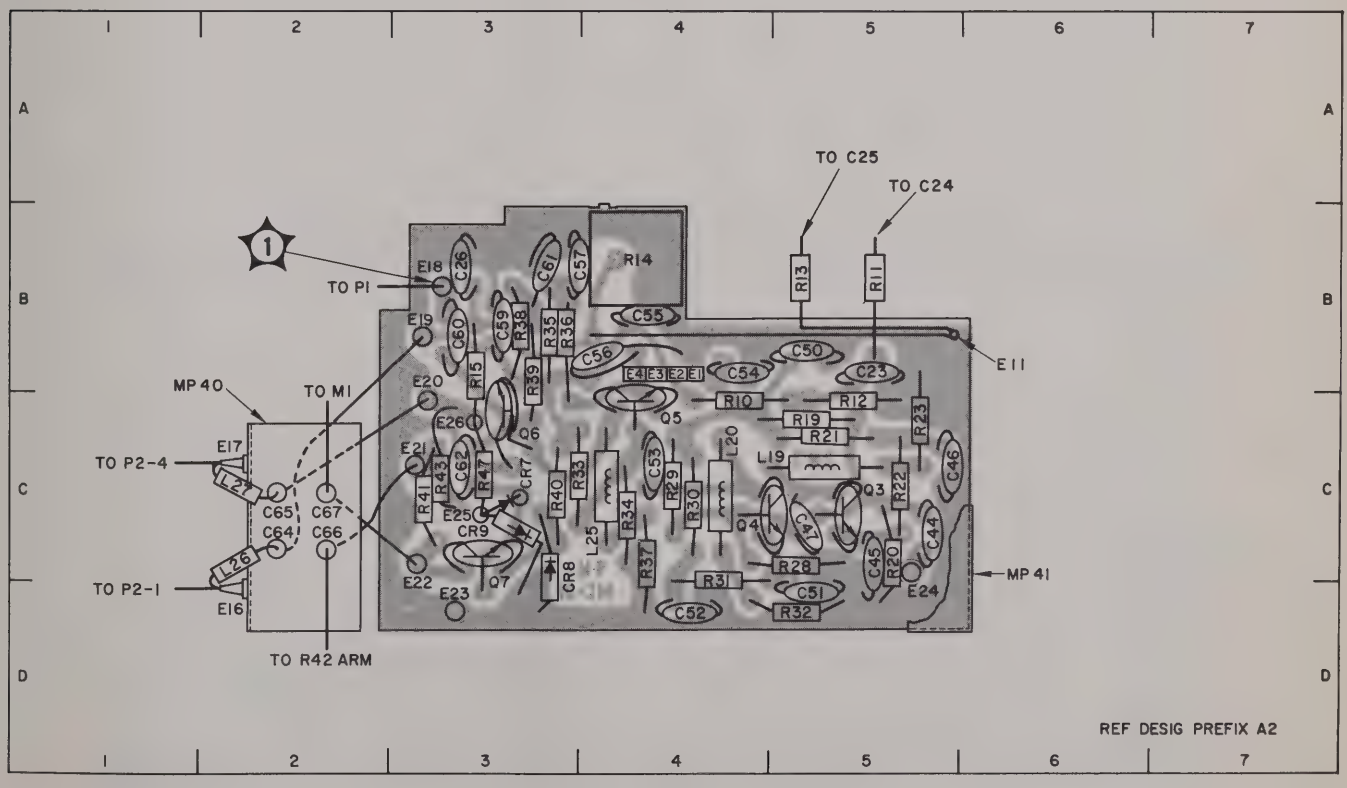

VIDEO AMPLIFIER

NOTE 2. The video amplifier parts on this sheet apply to units with serial No. A1, A2, A3, A14, A16, A19, A23, A24, A32, A34, A35, A37 and up.

Figure 5-54. Video Amplifier and Harmonic Generator, Location of Parts (Sheet 2 of 2)

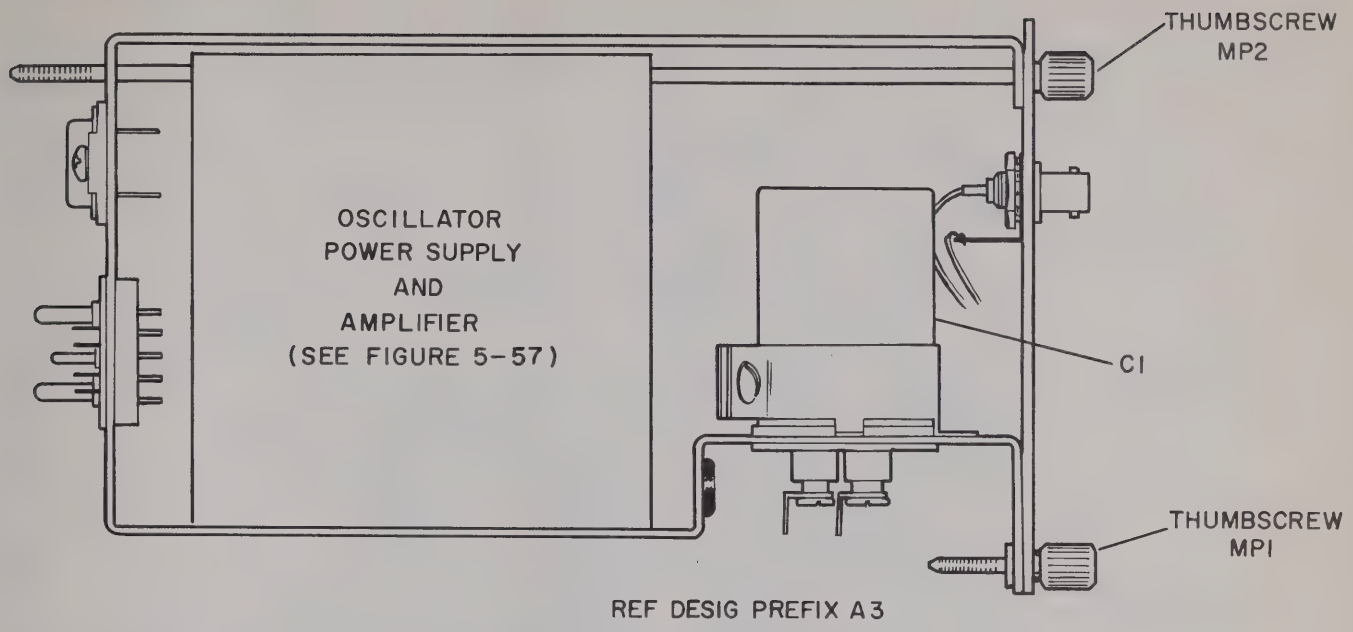

Figure 5-55. Radio Frequency Oscillator A3, Left-Side View, Location of Parts

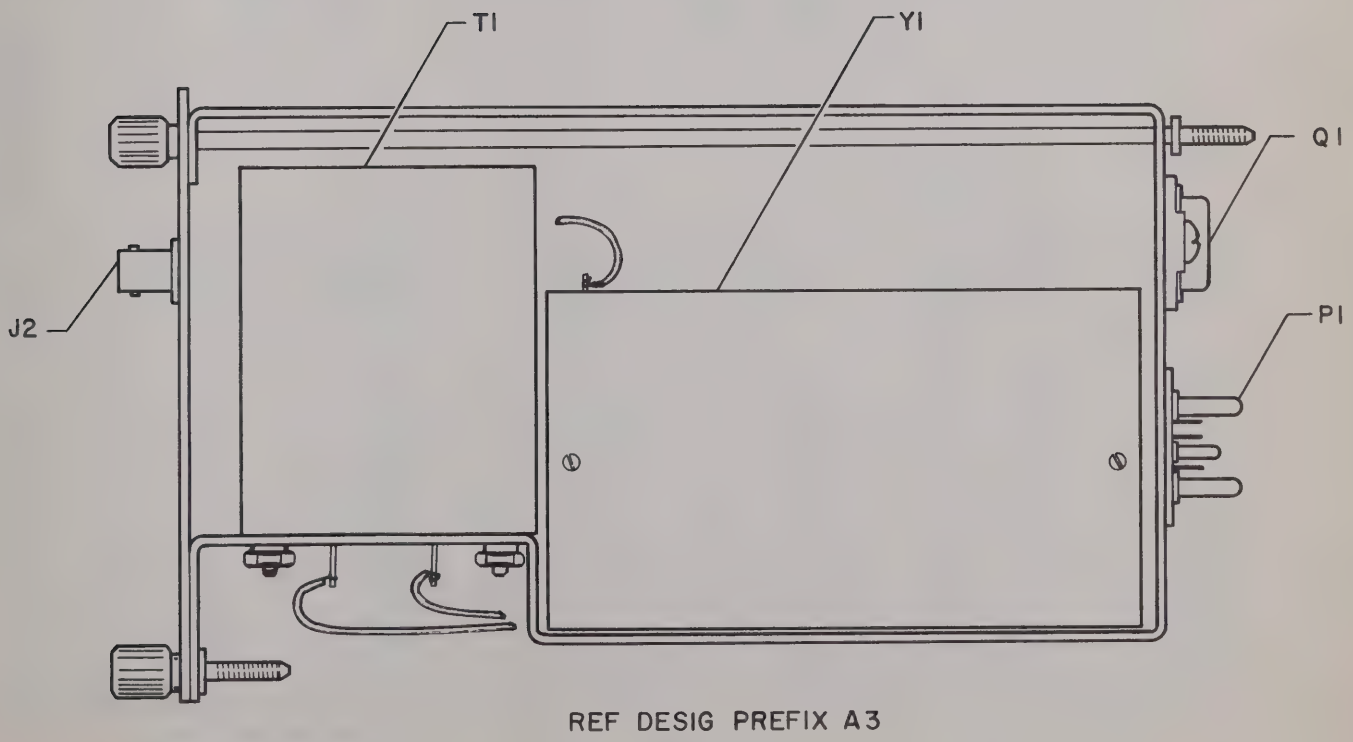

Figure 5-56. Radio Frequency Oscillator A3, Right-Side View, Location of Parts

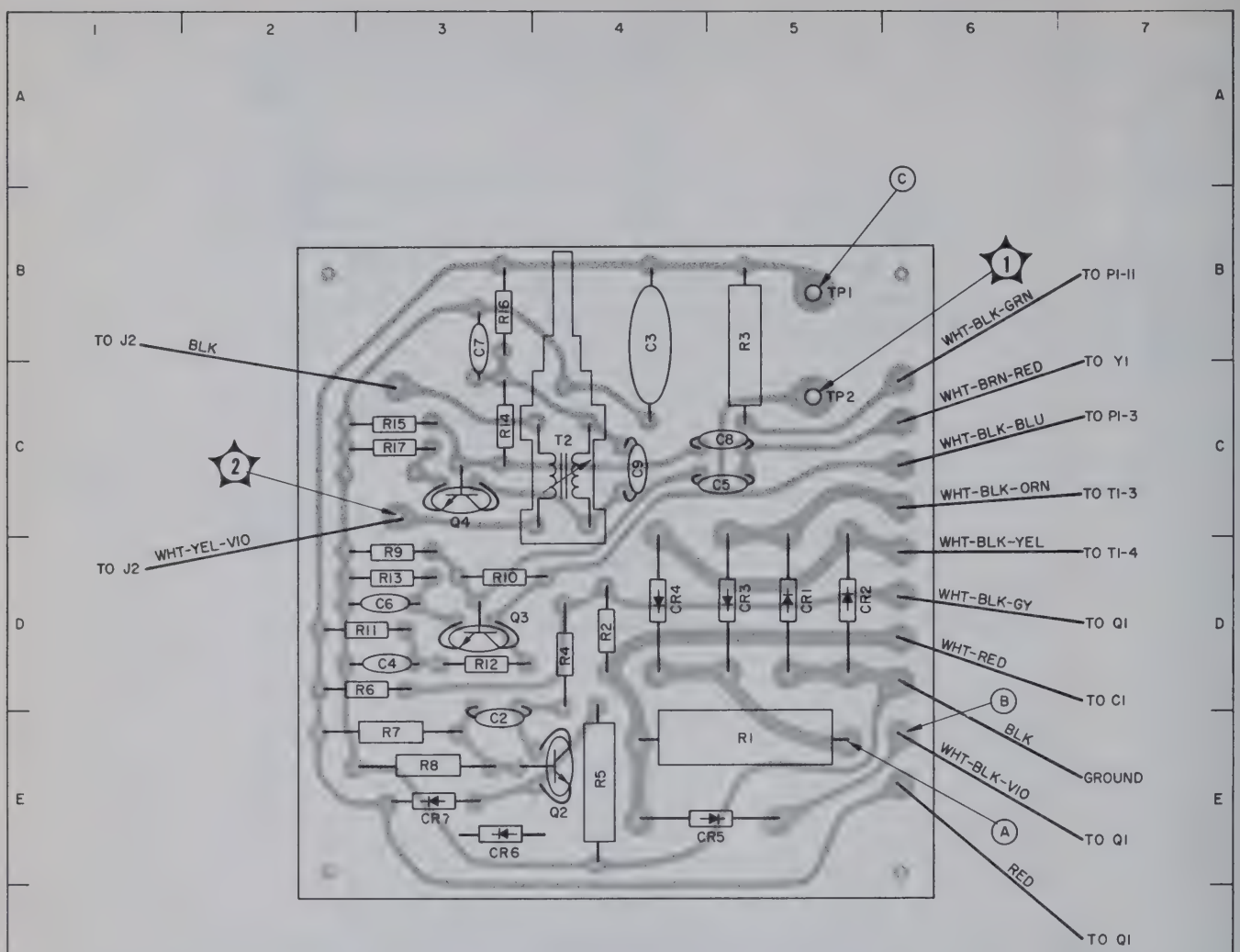

REF. DESIG.	DRAWING LOCATION
C2	3E
C3	4C
C4	3D
C5	5C
C6	3D
C7	3B
C8	5C
C9	4D
C10	3C
CR1	5D
CR2	5D
CR3	5D
CR4	4D

REF. DESIG.	DRAWING LOCATION
CR5	4E
CR6	3E
CR7	3E
Q2	4E
Q3	3D
Q4	3C
R1	5E
R2	4D
R3	5C
R4	4D
R5	4E
R6	2D
R7	2E

REF. DESIG.	DRAWING LOCATION
R8	3E
R9	3D
R10	3D
R11	2D
R12	3D
R13	3D
R14	3C
R15	3C
R16	3B
R17	3C
T2	4C
TP1	5B
TP2	5C

REF DESIG PREFIX A3

Figure 5-57. Oscillator Power Supply and Amplifier, Location of Parts

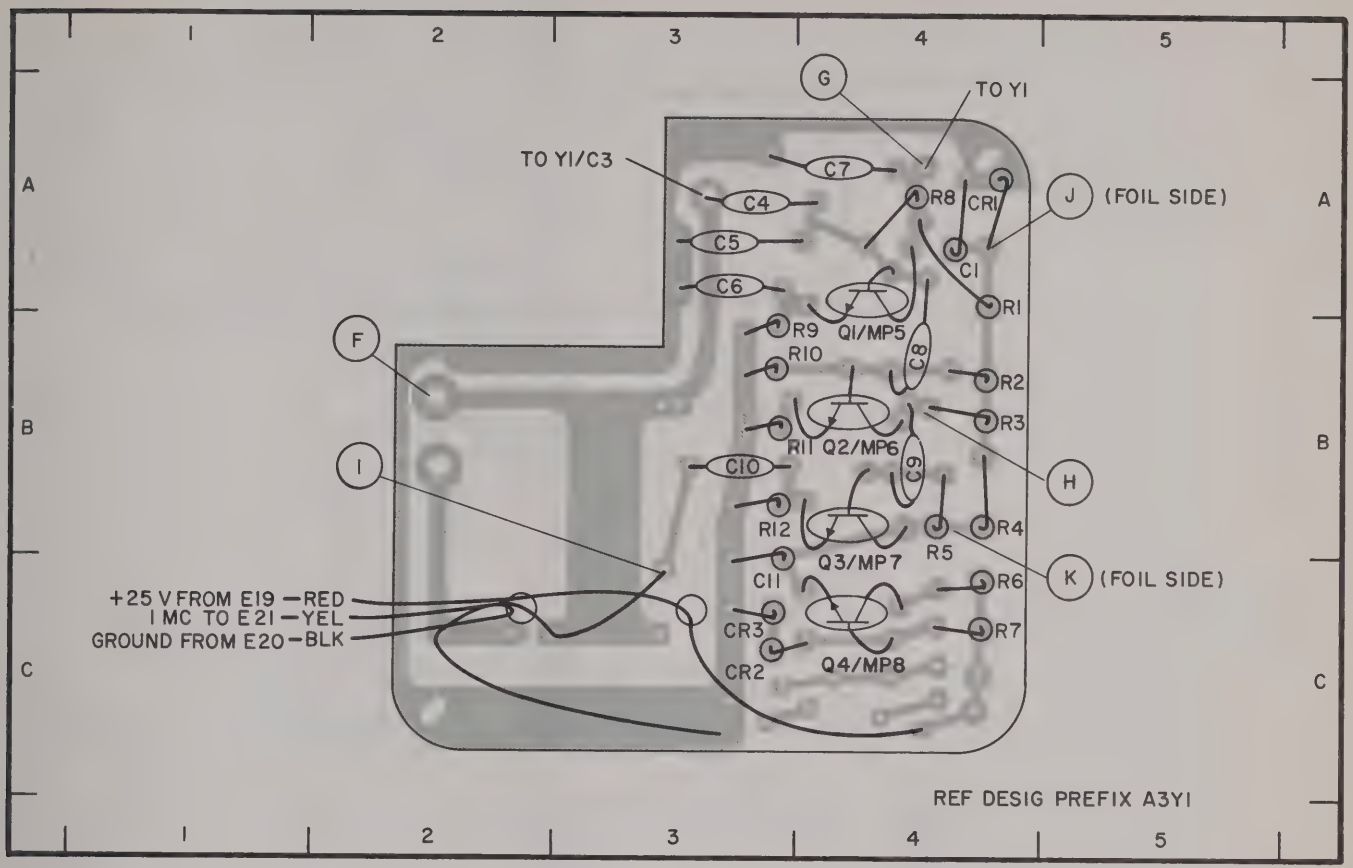

Figure 5-58. 1-Mc Oscillator A3Y1 Frequency Generator, Location of Parts

PARTS LOCATION INDEX

REF. DESIG.	DRAWING LOCATION	REF. DESIG.	DRAWING LOCATION
C1	4A	Q1	4A
C4	3A	Q2	4B
C5	3A	Q3	4B
C6	3A	Q4	4C
C7	4A	R1	4A
C8	4B	R2	4B
C9	4B	R3	4B
C10	3B	R4	4B
C11	3C	R5	4B
CR1	4A	R6	4C
CR2	3C	R7	4C
CR3	3C	R8	4A
MP5	4B	R9	3B
MP6	4B	R10	3B
MP7	4C	R11	3B
MP8	4C	R12	3B

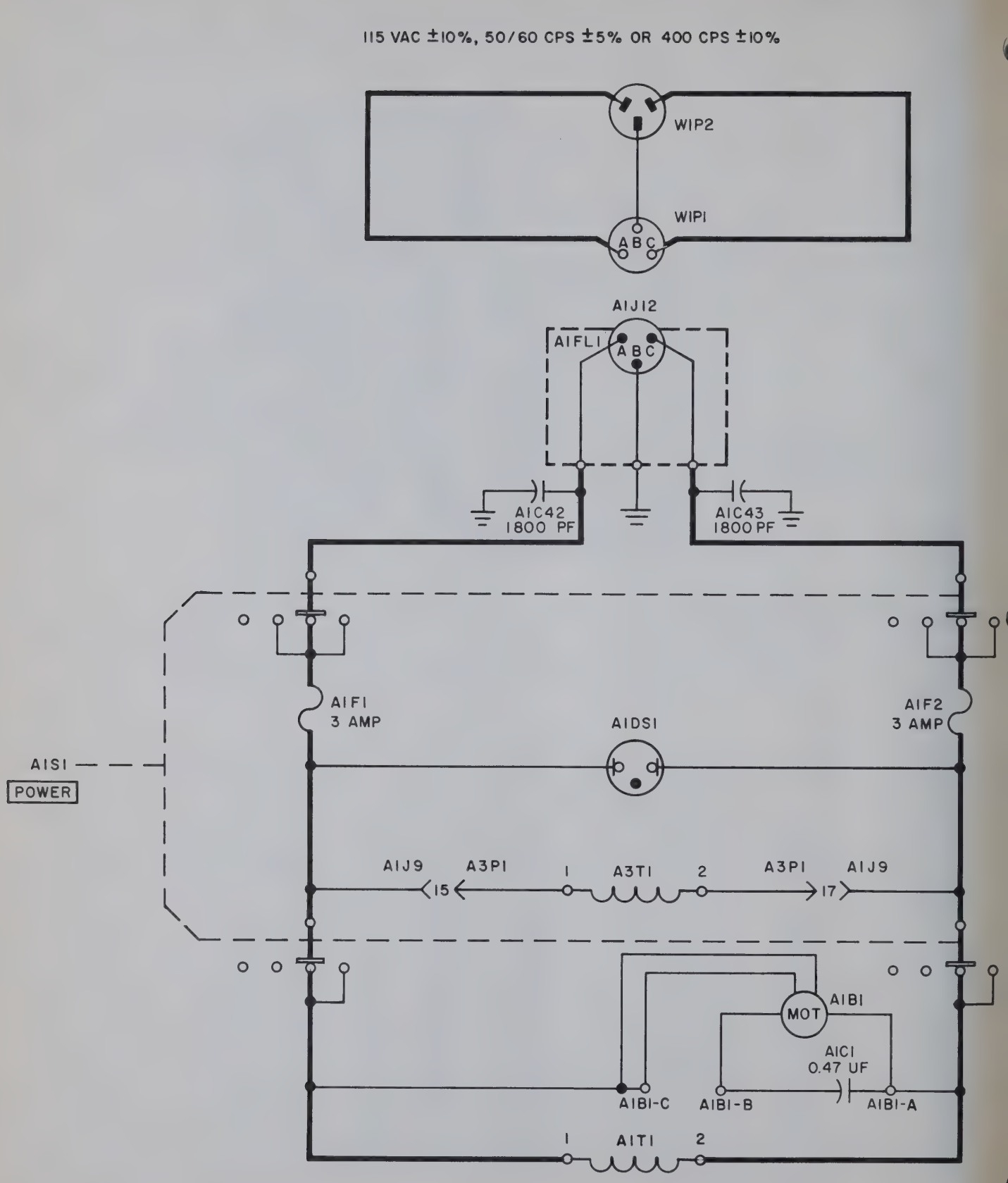

Figure 5-59. Power Distribution Diagram

1. Component values expres
2. —— -- —— indicat
3. Names of panel controls a
4. Primary signal paths wei
5. Dc voltages are preceded
6. Dc voltages are measure

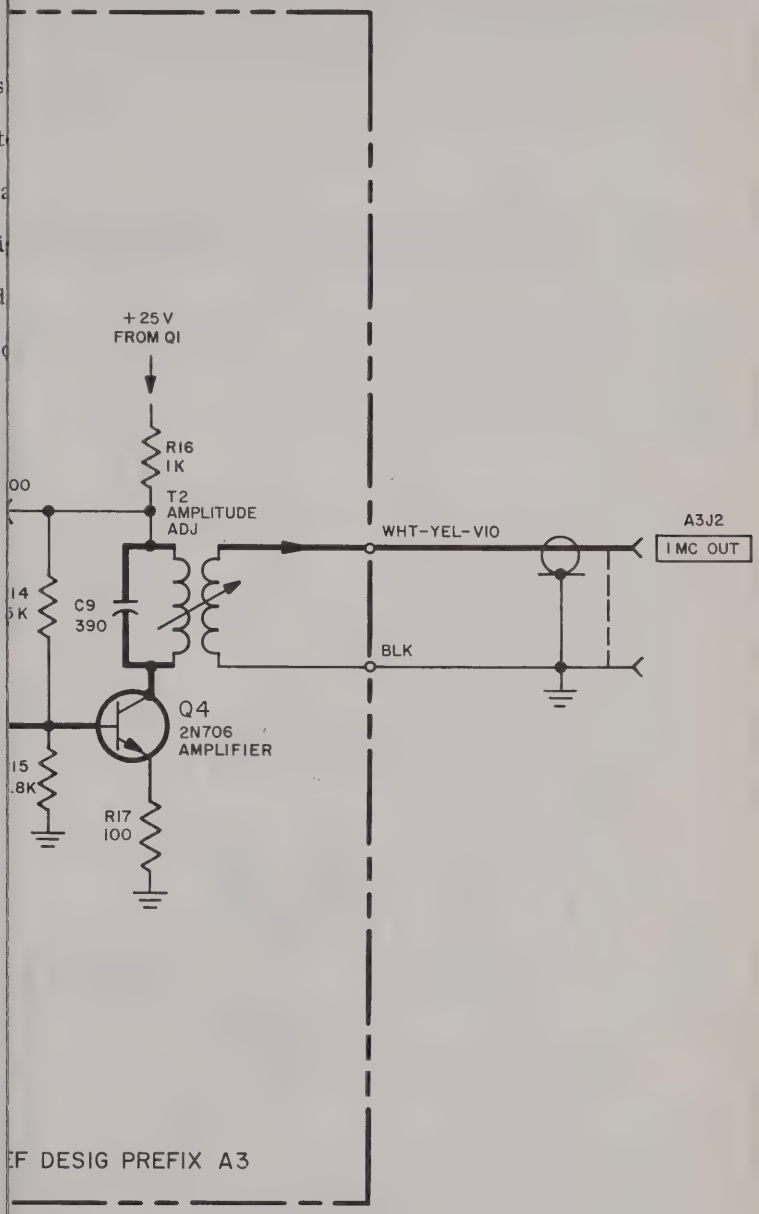

Figure 5-60. Radio Frequency Oscillator, Schematic Diagram (Sheet 1 of 2)

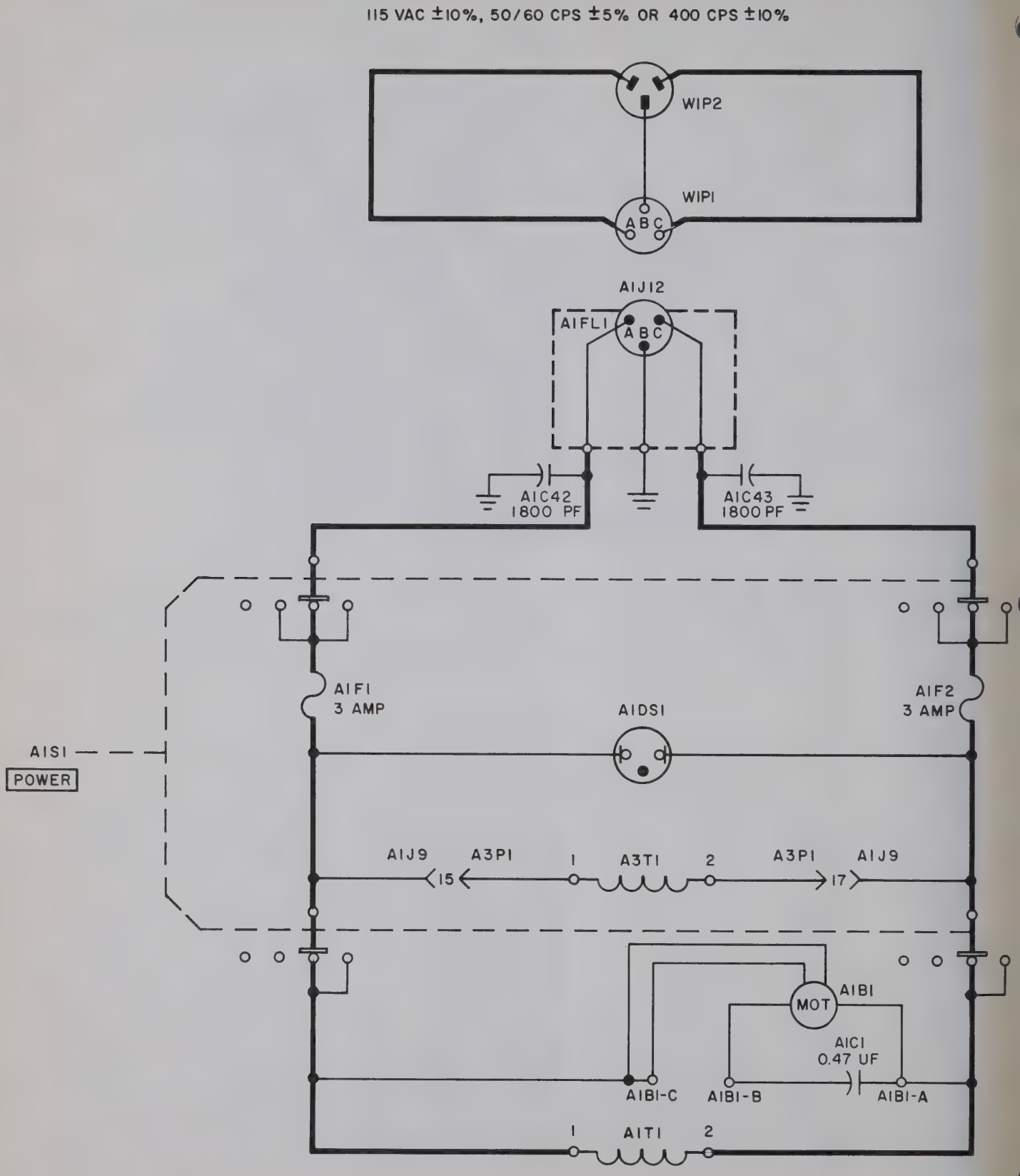

Figure 5-59. Power Distribution Diagram

NOTES

1. Component values expressed in ohms and picofarads unless otherwise noted.
2. —— -- —— indicates etched circuit boundaries.
3. Names of panel controls and connectors are enclosed in boxes.
4. Primary signal paths weighted.
5. Dc voltages are preceded by "+" or "-".
6. Dc voltages are measured with a CCUH-801 Dc Differential Voltmeter.

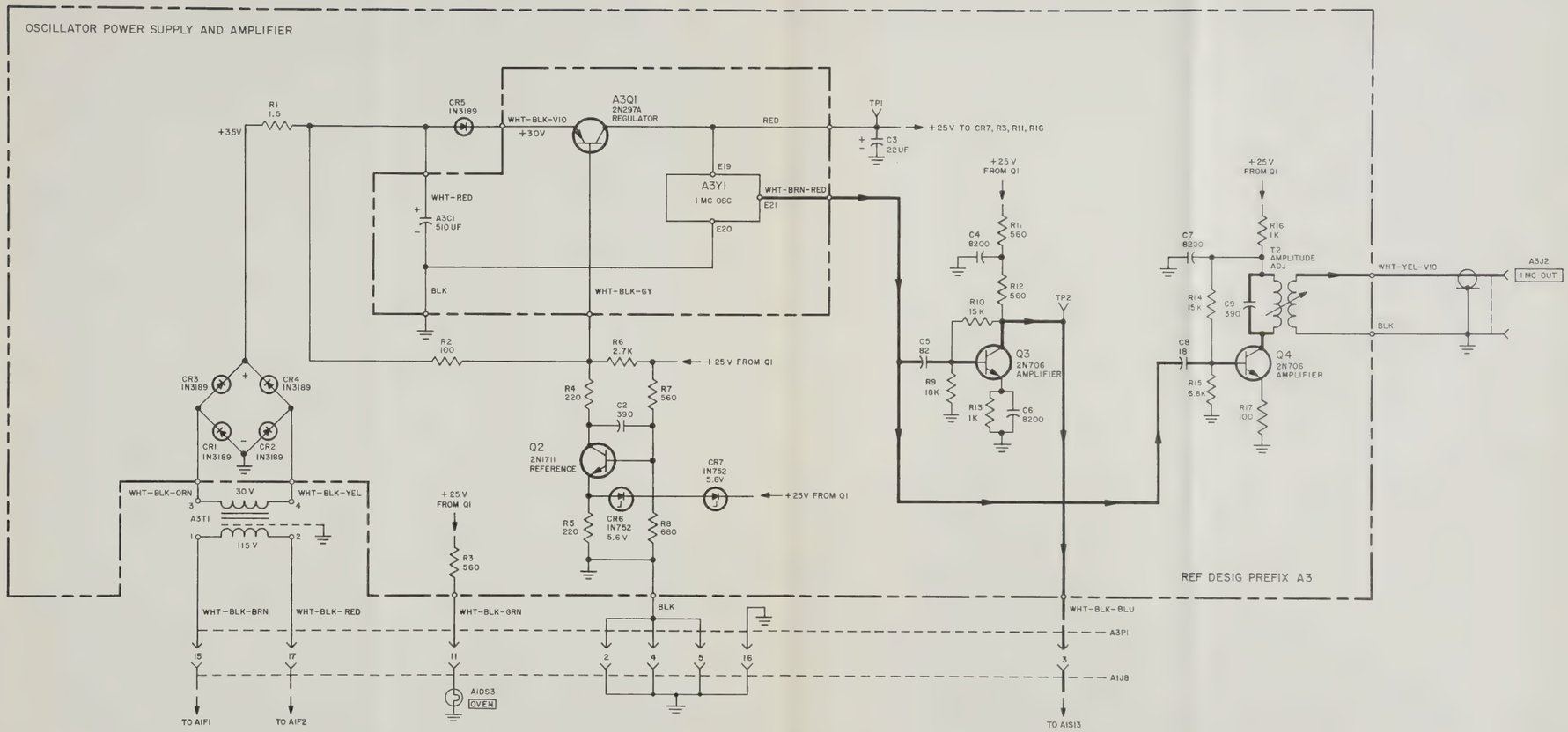

Figure 5-60. Radio Frequency Oscillator, Schematic Diagram (Sheet 1 of 2)

NOTES

1. Component values expressed in ohms and picofarads unless otherwise noted.
2. —— -- —— indicates etched circuit boundaries.
3. Names of panel controls and connectors are enclosed in boxes.
4. Primary signal paths weighted.
5. Dc voltages are preceded by "+" or "-".
6. Dc voltages are measured with a CCUH-801 Dc Differential Voltmeter.

Figure 5-60. Radio Frequency Oscillator,
Schematic Diagram (Sheet 1 of 2)

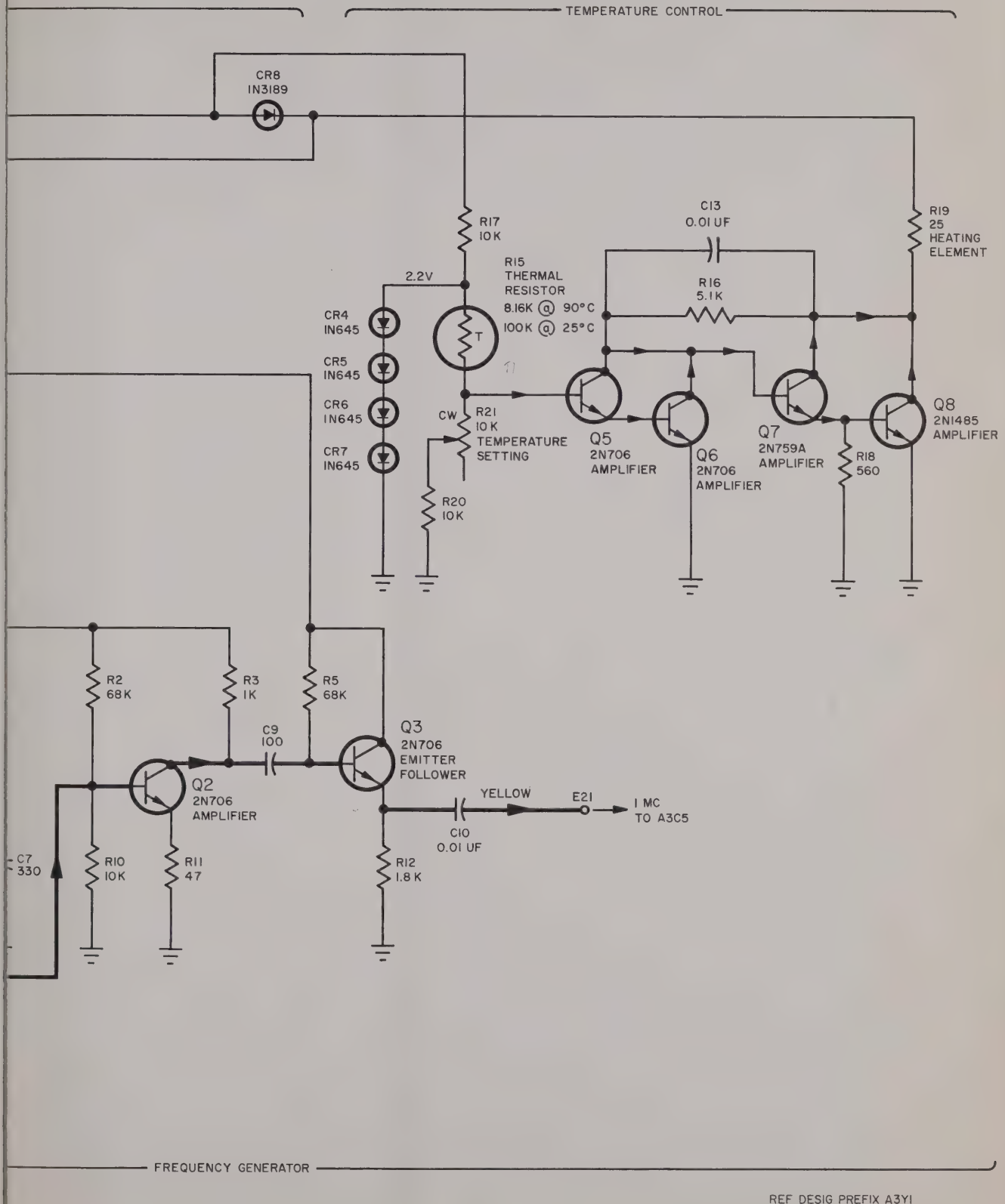

Figure 5-60. Radio Frequency Oscillator, Schematic Diagram (Sheet 2 of 2)

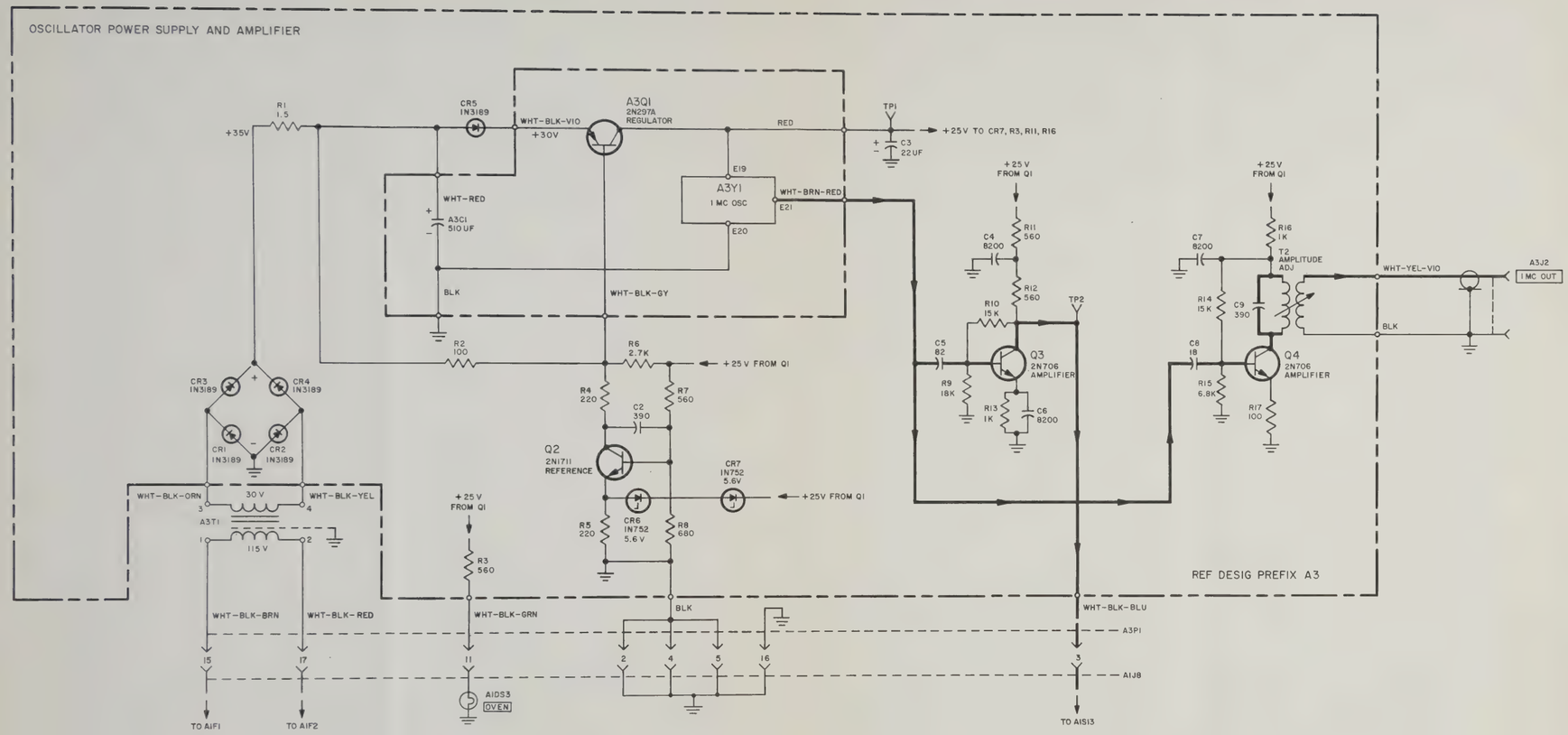

NOTES

1. Component values expressed in ohms and picofarads unless otherwise noted.
2. —— -- —— indicates etched circuit boundaries.
3. Names of panel controls and connectors are enclosed in boxes.
4. Primary signal paths weighted.
5. Dc voltages are preceded by "+" or "-".
6. Dc voltages are measured with a CCUH-801 Dc Differential Voltmeter.

Figure 5-60. Radio Frequency Oscillator, Schematic Diagram (Sheet 1 of 2)

NOTES

1. Component values expressed in ohms and picofarads unless otherwise noted.
2. Names of panel controls enclosed in boxes.
3. Primary signal paths weighted. Feedback paths weighted and dashed.
4. Dc voltages are preceded by "+" or "-".
5. The letters CW placed adjacent to A3YR21 indicate the direction of rotation viewed from the shaft end.
6. Dc voltages measured with a CCUH-801 Dc Differential Voltmeter.
7. Procedure for selecting A3Y1R1 described in paragraph 5-5ak.
8. Procedure for selecting A3Y1C4 described in paragraph 5-5aj.

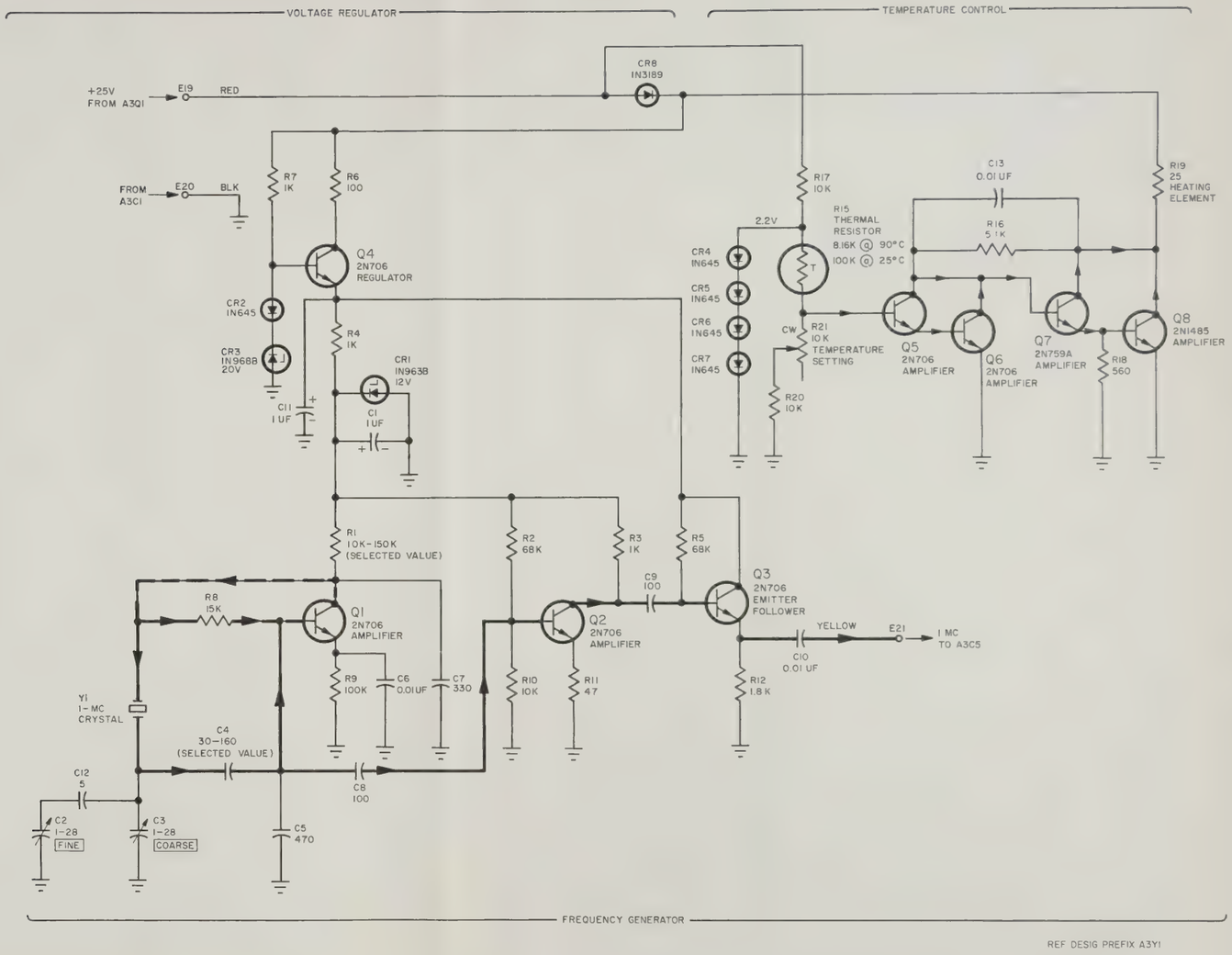

Figure 5-60. Radio Frequency Oscillator, Schematic Diagram (Sheet 2 of 2)

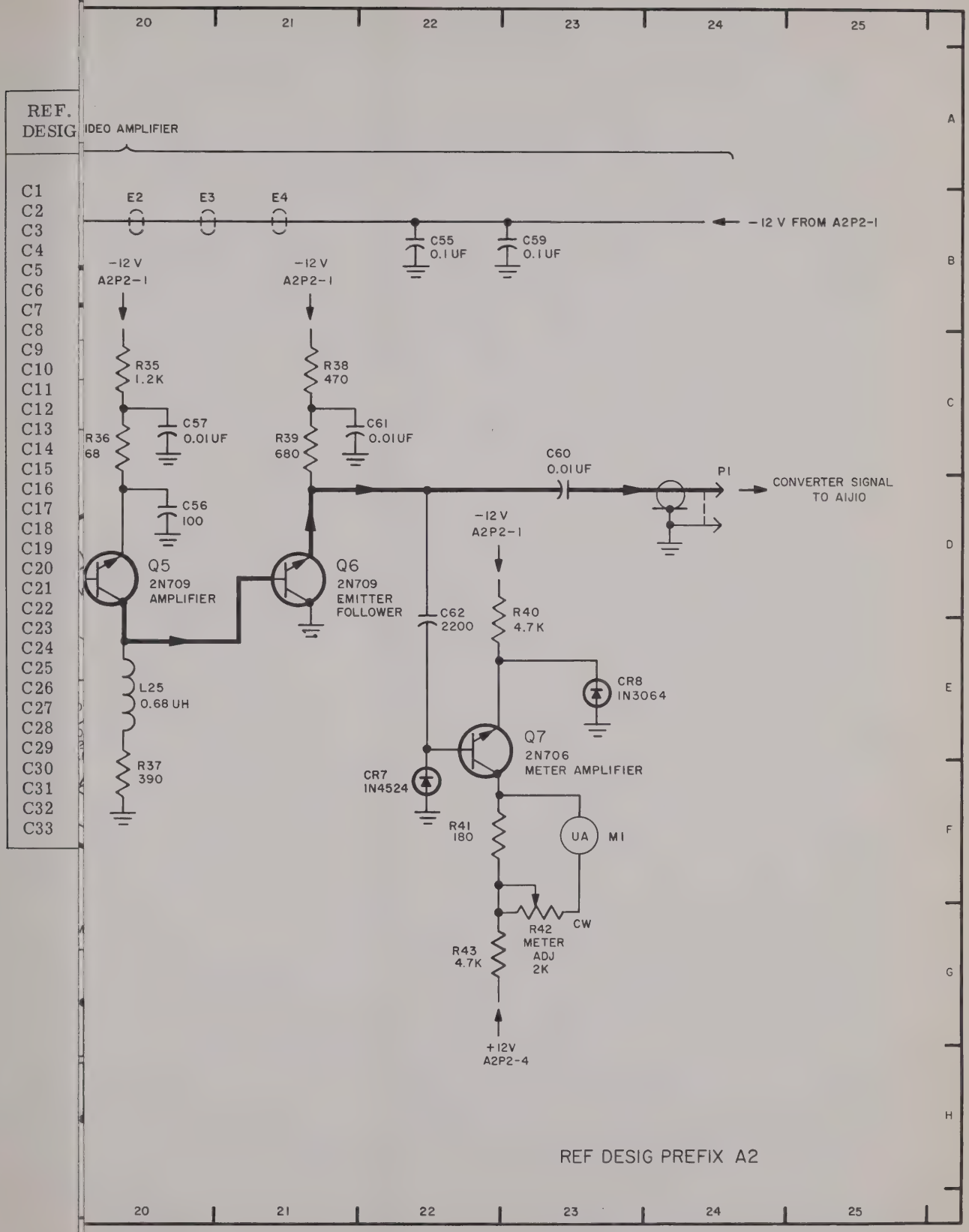

Figure 5-61. Electronic Frequency Converter less Frequency Multiplier A2A1, Schematic Diagram

PARTS LOCATION INDEX

REF. DESIG.	DRAWING LOCATION
C1	4B
C2	8D
C3	7D
C4	7D
C5	6D
C6	6E
C7	6E
C8	6E
C9	7F
C10	7F
C11	7F
C12	7F
C13	8F
C14	8F
C15	8F
C16	8F
C17	5H
C18	6G
C19	7H
C20	7H
C21	7H
C22	8G
C23	11B
C24	10D
C25	10E
C26	10F
C27	10E
C28	11E
C29	12D
C30	12E
C31	13D
C32	13E
C33	14D
C34	14E
C35	15E
C44	15D
C45	17D
C46	17C
C47	17E
C50	17B
C51	18D
C52	18C
C53	18E
C54	19B
C55	22B
C56	20D
C57	20C
C59	23B
C60	23D
C61	21C
C62	22E
CR1	10D
CR2	10E
CR3	8F
CR7	22F
CR8	23E
E1	19B
E2	20B
E3	20B
E4	21B
E5	8D
E6	10D
E7	10D
E8	10C
E9	9D
E10	9C
E11	10E
J1	3B
L1	6G
L2	8G
L3	11D
L4	12D
L5	13D
L6	14D
L19	16E
L20	18E
L25	20E
M1	23F
P1	24D
P2	2C
Q3	16D
Q4	18D
Q5	20D
Q6	21D
Q7	22E
R1	4B
R2	5B
R3	5B
R4	6B
R5	6B
R6	7B
R7	8E
R8	8H
R9	8H
R10	11B
R11	10C
R12	11C
R13	10F
R14	10F
R15	11F
R16	15E
R17	15E
R19	16C
R20	16D
R21	16B
R22	16C
R23	16E
R28	18E
R29	17C
R30	18B
R31	18C
R32	18F
R33	19E
R34	19E
R35	20C
R36	20C
R37	20F
R38	21C
R39	21C
R40	22E
R41	22F
R42	23G
R43	22G
S1	5B
S2	7B
S3	8B
S4	7E
T1	8E

NOTES

1. Component values expressed in ohms and picofarads.
2. —— -- —— indicates etched circuit assembly boundaries.
3. Names of panel controls and connectors are enclosed in boxes.
4. Primary signal paths weighted.
5. Dc voltages are preceded by "+" or "-".
6. Dc voltages are measured with a CCUH-801 Dc Differential Voltmeter.
7. Parts location information is given in map-type coordinates in accompanying table.
8. Circuit groups are identified by brackets.
9. A2S4 shown in [100] position viewed from control knob or actuator end.

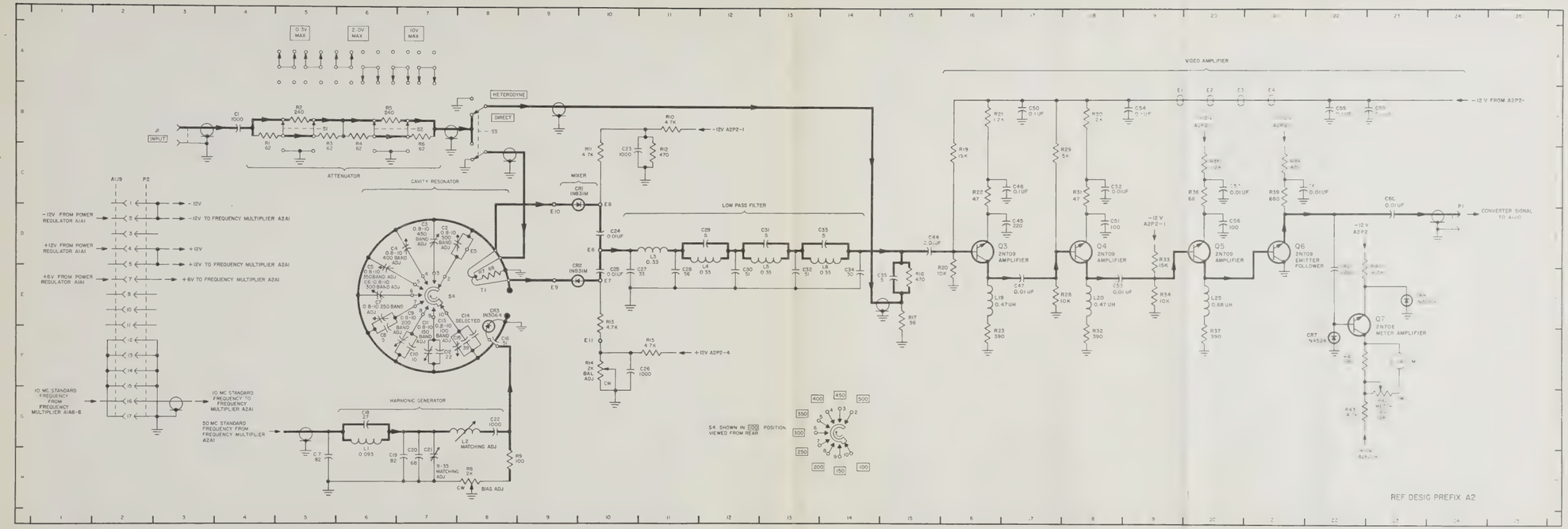

Figure 5-61. Electronic Frequency Converter less Frequency Multiplier A2A1, Schematic Diagram

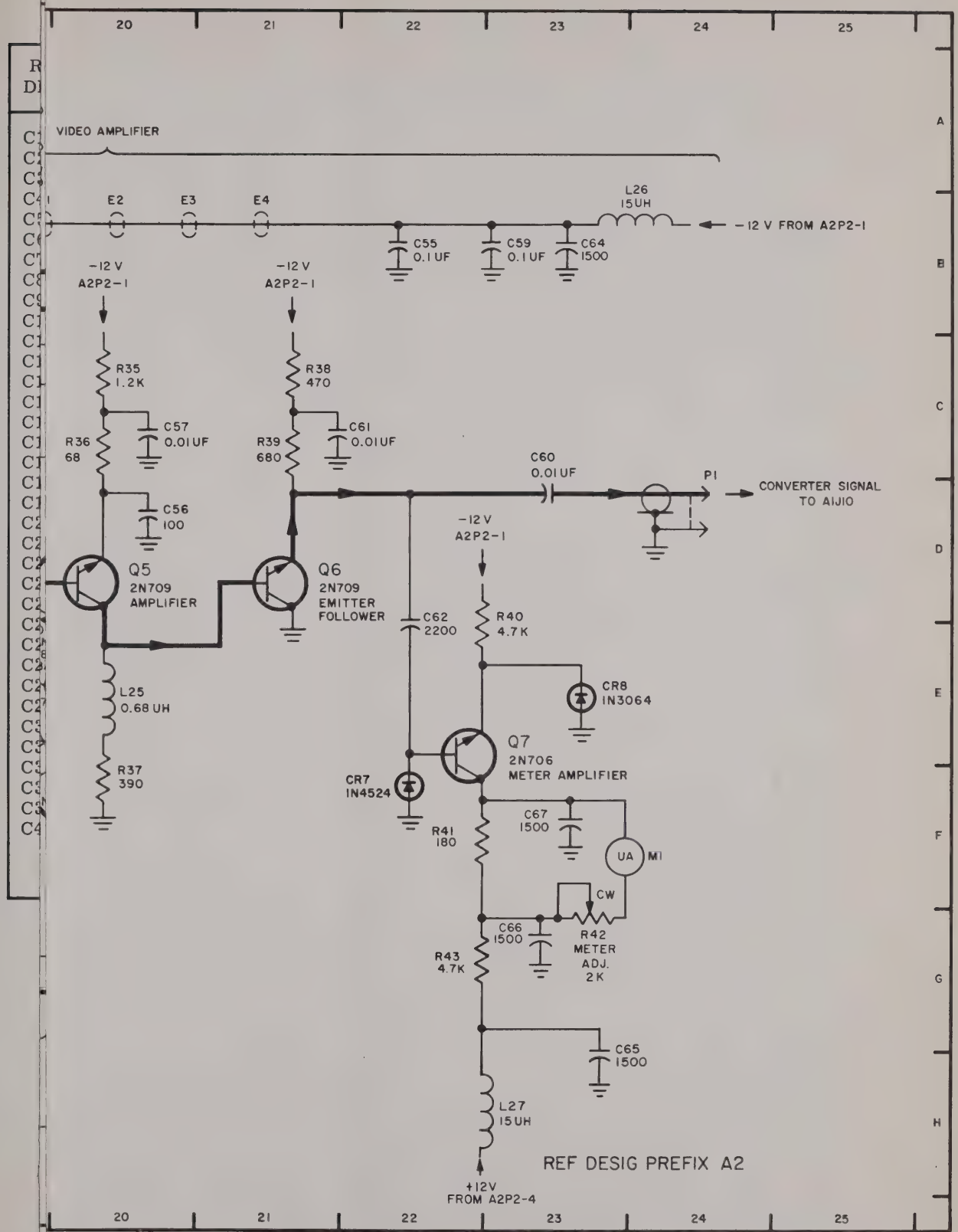

Figure 5-61A. Electronic Frequency Converter Less Frequency Multiplier A2A1, Schematic Diagram (for Units with Serial No. A1, A2, A3, A14, A16, A19, A23, A29, A32, A34, A35, A37 and Up)

PARTS LOCATION INDEX

REF. DESIG.	DRAWING LOCATION
C1	4B
C2	8D
C3	7D
C4	7D
C5	6D
C6	6E
C7	6E
C8	6E
C9	7F
C10	7F
C11	7F
C12	7F
C13	8F
C14	8F
C15	8F
C16	8F
C17	5H
C18	6G
C19	7H
C20	7H
C21	7H
C22	8G
C23	11B
C24	10D
C25	10E
C26	10F
C27	10E
C28	11E
C29	12D
C30	12E
C31	13D
C32	13E
C33	14D
C34	14E
C44	15D

REF. DESIG.	DRAWING LOCATION
C45	17D
C46	17C
C47	17E
C50	17B
C51	18D
C52	18C
C53	18E
C54	19B
C55	22B
C56	20D
C57	20C
C59	23B
C60	23D
C61	21C
C62	22E
C63	9D
C64	23B
C65	22G
C66	23F
C67	23F
CR1	10D
CR2	10E
CR3	8F
CR7	22F
CR8	23E
E1	19B
E2	20B
E3	20B
E4	21B
E5	8D
E6	10D
E7	10D
E8	10C
E9	9D

REF. DESIG.	DRAWING LOCATION
E10	9C
E11	10E
J1	3B
L1	6G
L2	8G
L3	11D
L4	12D
L5	13D
L6	14D
L19	16E
L20	18E
L22	23H
L25	20E
L26	24B
M1	23F
P1	24D
P2	2C
Q3	16D
Q4	18D
Q5	20D
Q6	21D
Q7	22E
R1	4B
R2	5B
R3	5B
R4	6B
R5	6B
R6	7B
R8	8H
R9	8H
R10	11B
R11	10C
R12	11C
R13	10F

REF. DESIG.	DRAWING LOCATION
R14	10F
R15	11F
R16	15E
R17	15E
R19	16C
R20	16D
R21	16B
R22	16C
R23	16E
R28	18E
R29	17C
R30	18B
R31	18C
R32	18F
R33	19E
R34	19E
R35	20C
R36	20C
R37	20F
R38	21C
R39	21C
R40	22E
R41	22F
R42	23G
R43	22G
R45	8C
R48	8C
R49	9D
R50	9D
S1	5B
S2	7B
S3	8B
S4	7E
T1	8E

NOTES

1. Component values expressed in ohms and picofarads.
2. ———— indicates etched circuit assembly boundaries.
3. Names of panel controls and connectors are enclosed in boxes.
4. Primary signal paths weighted.
5. Dc voltages are preceded by "+" or "−".
6. Dc voltages are measured with a CCUH-801 Dc Differential Voltmeter.
7. Parts location information is given in map-type coordinates in accompanying table.
8. Circuit groups are identified by brackets.
9. A2S4 shown in [100] position viewed from control knob or actuator end.
10. A2C8 is 4 pf on converters with serial No. A168 and up.

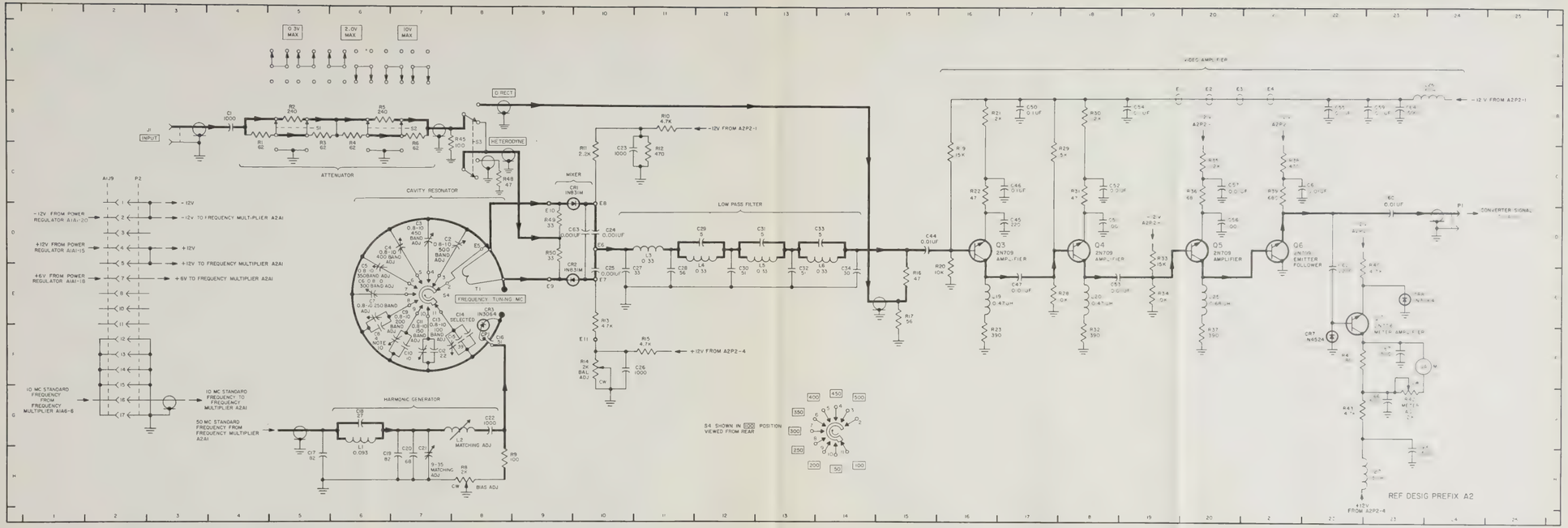

Figure 5-61A. Electronic Frequency Converter Less Frequency Multiplier A2A1, Schematic Diagram (for Units with Serial No. A1, A2, A3, A14, A16, A19, A23, A29, A32, A34, A35, A37 and Up)

5-116A.5-116B

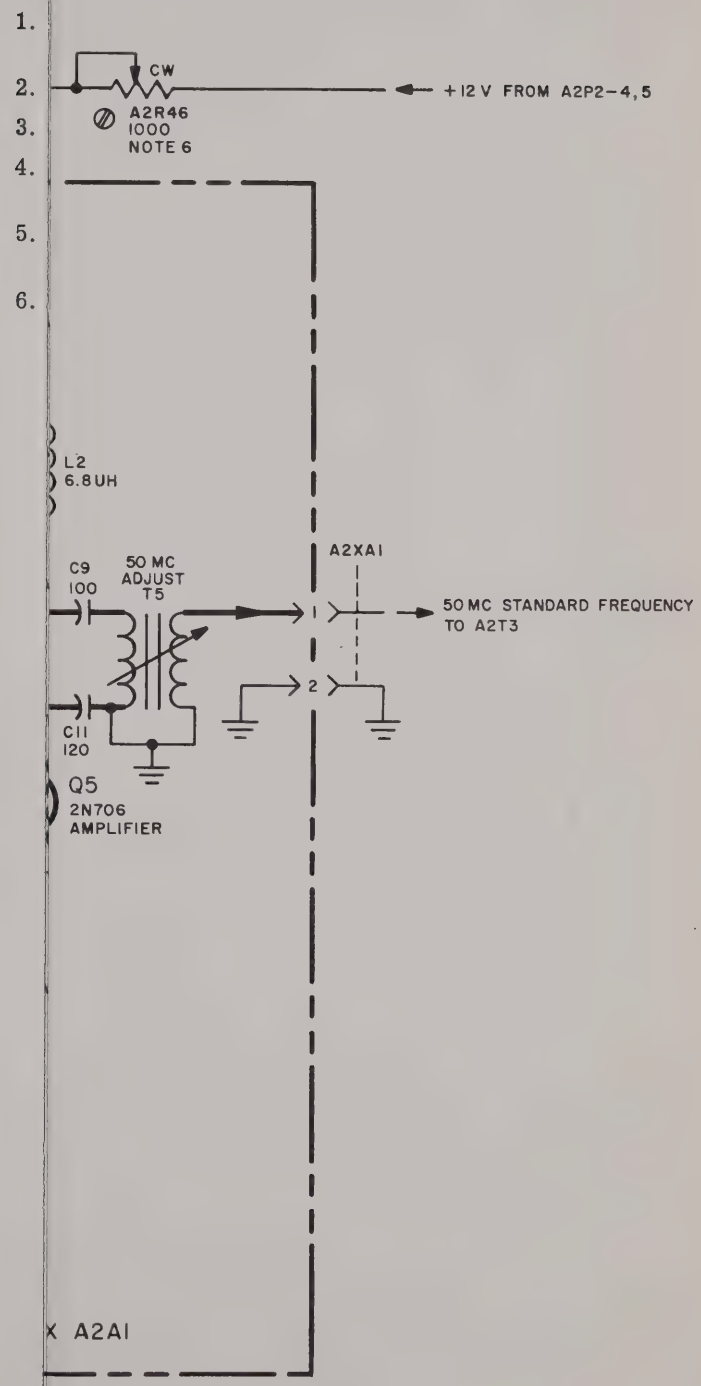

Figure 5-62. Electronic Frequency Converter Frequency Multiplier A2A1, Schematic Diagram

NOTES

1. Unless otherwise specified, component values expressed in ohms and picofarads.
2. Primary signal paths weighted.
3. Dc voltages are preceded by "+" or "−".
4. Alternate value supplied is 0.05 μf. Use 0.047 μf for replacement.
5. On A2A1 Model 25-527L4, R3 and C25 are not included, and emitter of Q4 is connected to ground.
6. A2R46 is 250 ohms on converters with serial No. A4 through A13, A15, A17, A18, A20, A21, A22, A24 through A28, A30, A31, A33, and A36.

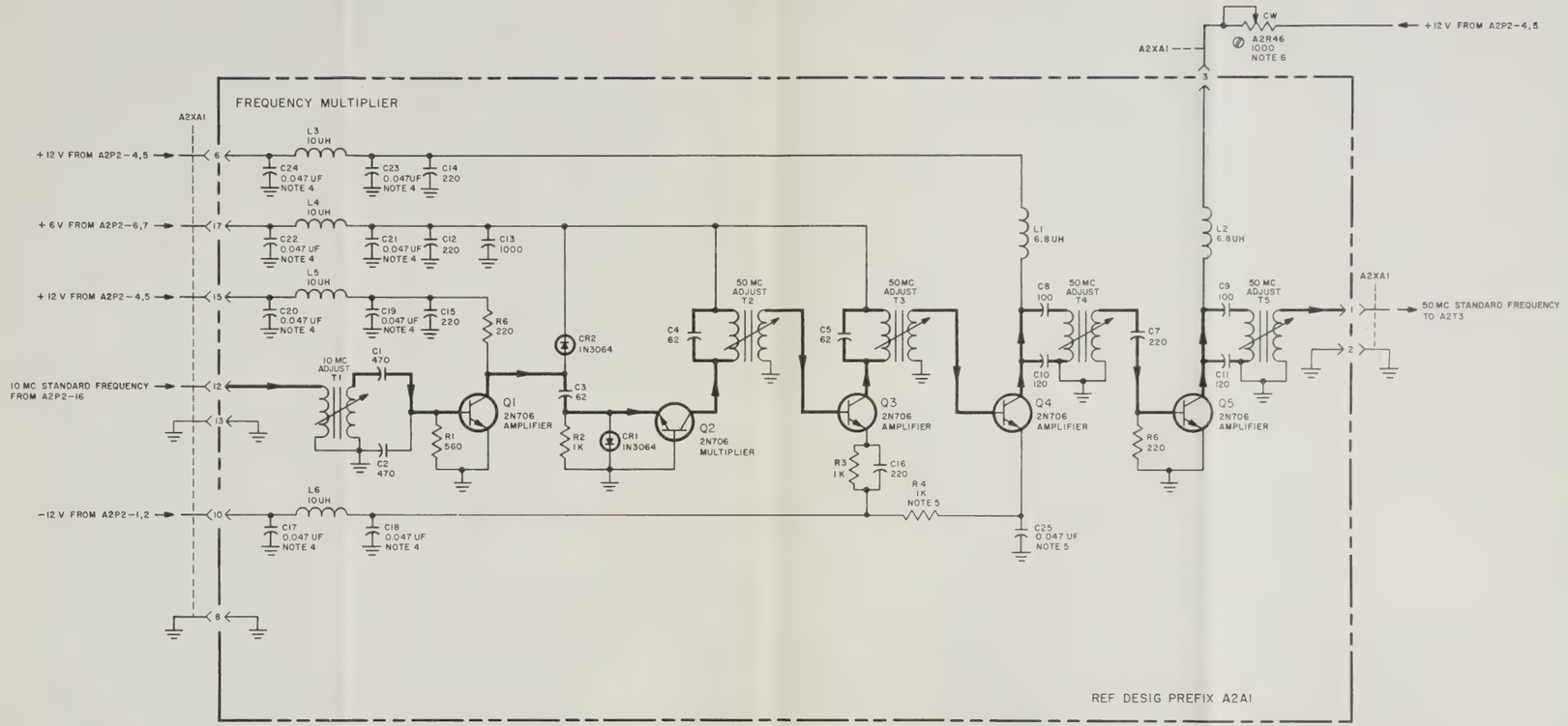

Figure 5-62. Electronic Frequency Converter Frequency Multiplier A2A1, Schematic Diagram

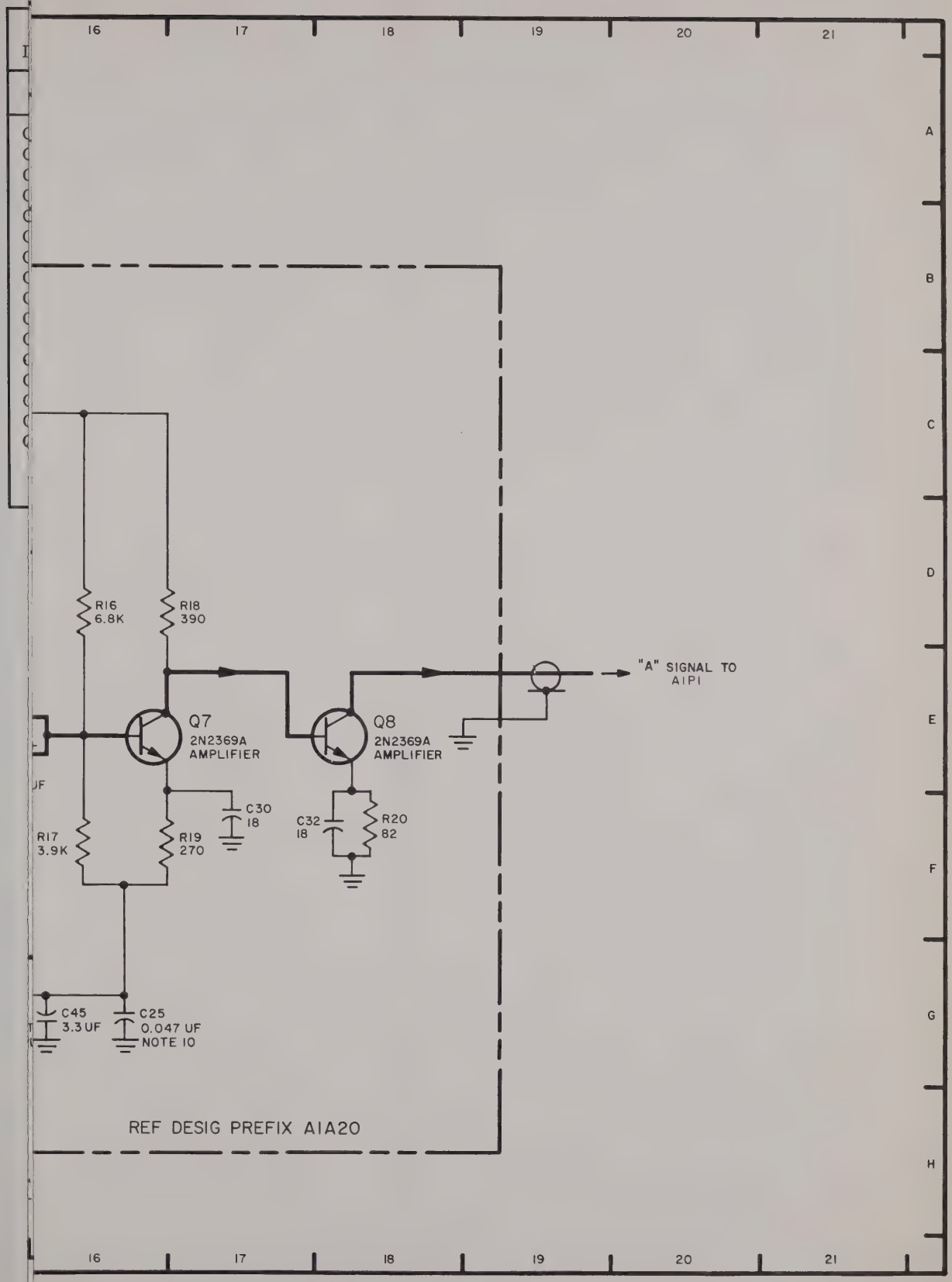

Figure 5-63. A Amplifier, Schematic Diagram

PARTS LOCATION INDEX

REF. DESIG.	DRAWING LOCATION	REF. DESIG.	DRAWING LOCATION	REF. DESIG.	DRAWING LOCATION	REF. DESIG.	DRAWING LOCATION
REF. DESIG. PREFIX A1A20				REF. DESIG. PREFIX A1A21			
C18	14E	Q6	15F	C15	8D	E8	4G
C20	14F	Q7	17E	C17	8E	E9	4H
C21	15F	Q8	18E	C18	7C	E10	4G
C23	12C	R8	12C	C19	8C	R2	7C
C25	16G	R9	14D	C20	5A	R3	7C
C26	12C	R10	13F	C21	7D	R4	7D
C28	15E	R11	14F	CR1	4E	R5	7D
C29	15E	R12	15G	E1	9C	R6	7E
C30	17F	R13	14G	E2	9C	R7	7E
C31	14C	R15	15C	E3	5A, 9D	R49	7F
C32	18F	R16	16D	E6	4B	S7	7A
C45	16G	R17	16F	E7	4D		
CR5	13C	R18	17D				
CR6	14D	R19	17F	REF. DESIG. PREFIX A1			
CR7	15G	R20	18F	J1	2A	R51	4G
Q5	15D			J10	2G		

NOTES

1. Component values expressed in ohms and picofarads unless otherwise noted.
2. ——— -- ——— indicates assembly boundaries.
3. Names of panel controls and connectors are enclosed in boxes.
4. Primary signal paths weighted.
5. Dc voltages are preceded by "+" or "−".
6. Dc voltages are measured with a CCUH-801 Dc Differential Voltmeter.
7. Parts location information is given in map-type coordinates in accompanying table.
8. On AN/USM-207 counters with A1A21 part No. MP13-523L4 the following apply:
   a. E6, zone 4B; E7, zone 4D; E8, zone 4G; E9, zone 4H; and E10, zone 9F not included.
   b. Capacitor C18, zone 7C, not included.
   c. Capacitor C19, zone 8C, not included.
   d. Capacitor C21, zone 7D, not included.
   e. Value of capacitor C15, zone 7D, is 15 pf.
   f. Diode CR1, zone 4E, is not included.
9. E3, zone 9D, included in AN/USM-207 units with A1A21 part No. MP13-523L4. E3, zone 5A, included in AN/USM-207 units with A1A21 part No. MP13-537L1.
10. Alternate value supplied is 0.05 μf. Use 0.047 μf for replacement.
11. A1R51 is not included on units with serial No. A4 through A13, A15, A17, A18, A20, A21, A22, A24 through A28, A30, A31, A33, and A36.

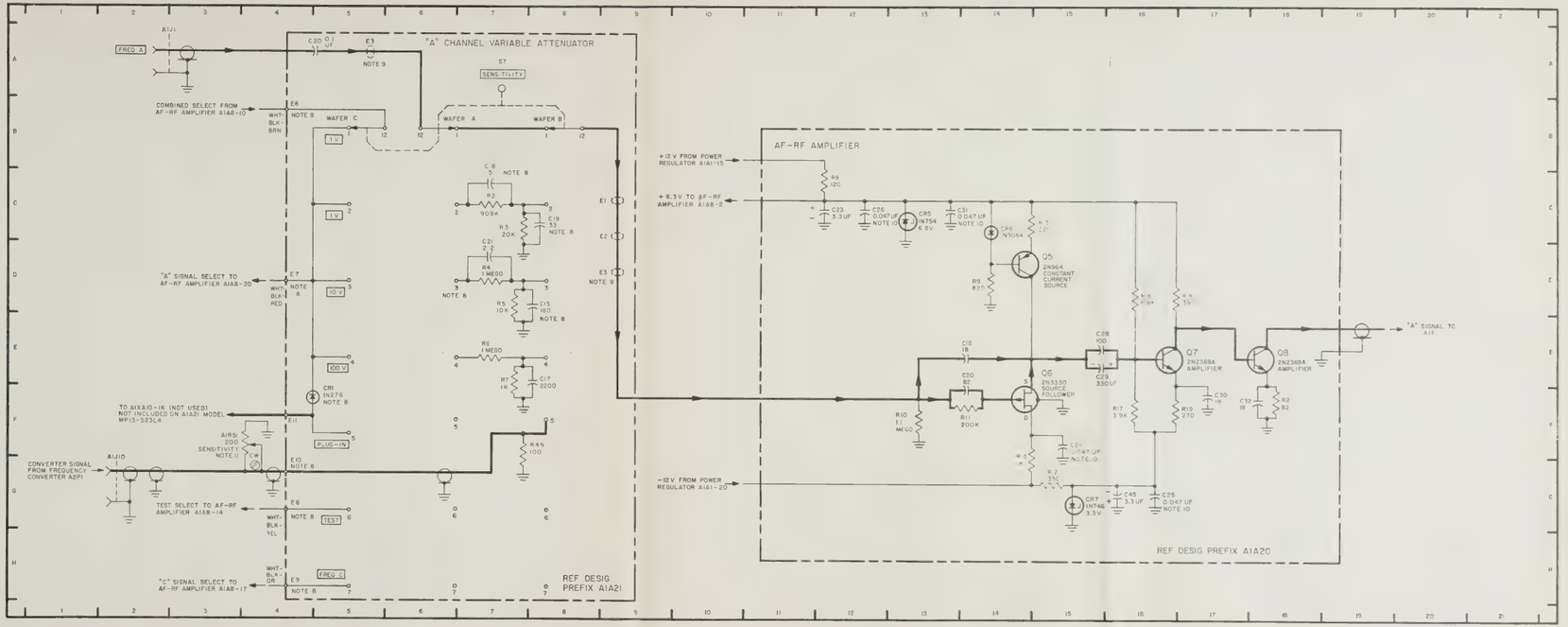

Figure 5-63. A Amplifier, Schematic Diagram

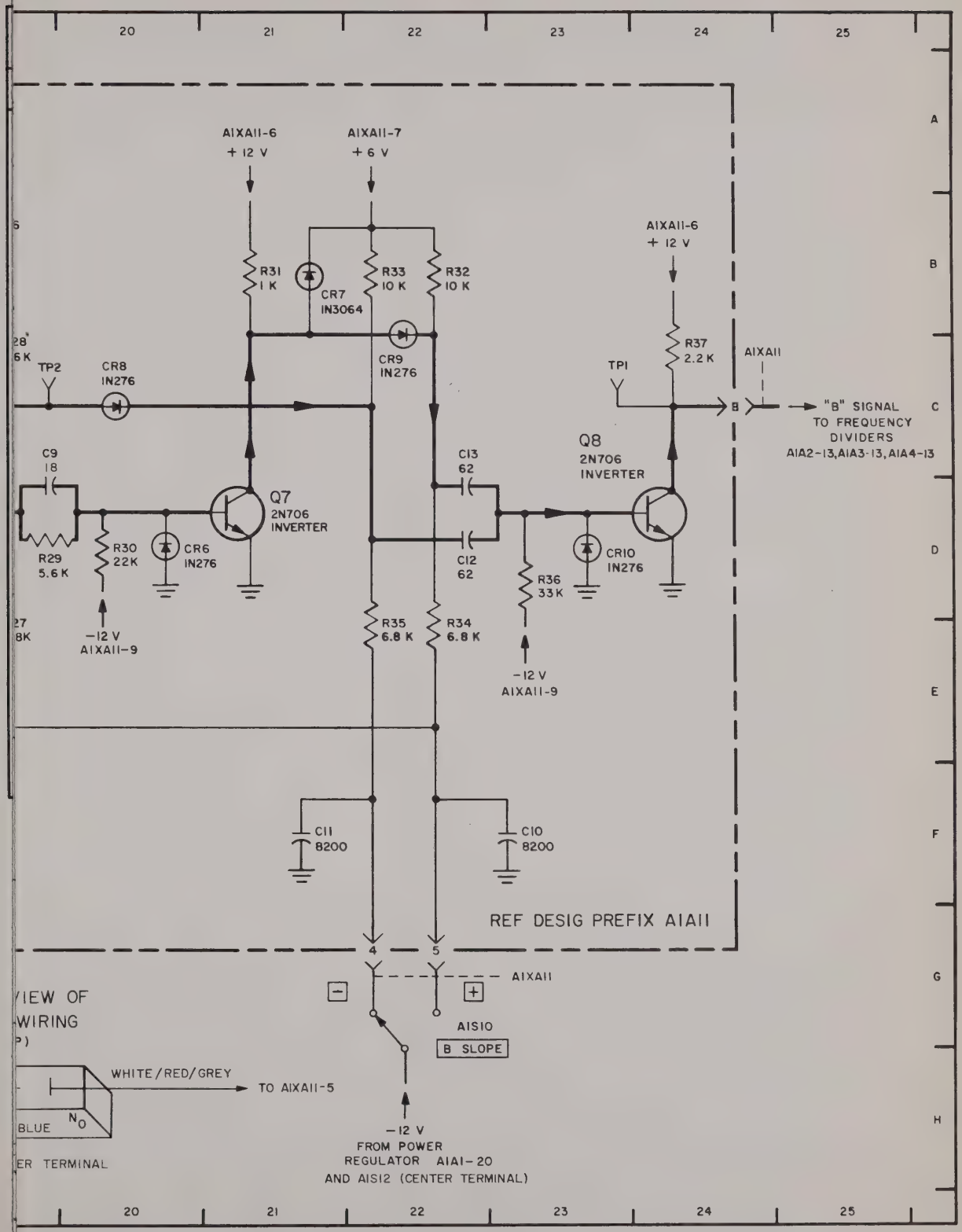

Figure 5-64. B Amplifier with A1A11 Model MP14-546L4 Af-Rf Amplifier, Schematic Diagram

PARTS LOCATION INDEX

REF. DESIG.	DRAWING LOCATION
PREFIX A1A11	
C2	10C
C3	11D
C4	12D
C5	12E
C6	16C
C7	15B
C8	17C
C9	19C
C10	23F
C11	21F
C12	22D
C13	22C
C14	9E
CR1	13C
CR2	15B
CR3	13E
CR4	19C
CR5	19C
CR6	20D
CR7	21B
CR8	20C
CR9	22C
CR10	23D
J1	9D
Q1	11C
Q2	12D
Q3	14D
Q4	16D
Q5	16C
Q6	18C
Q7	21D
Q8	23C
R1	10D
R2	10D
R3	11D
R4	12C
R5	13C
R6	12E
R7	12E
R8	15F
R9	13C
R10	13E
R11	14C
R12	14C
R13	15D
R14	14E
R15	15E
R16	16C
R17	16E
R18	13E
R19	14E
R20	16C
R21	17C
R22	17C
R23	17D
R24	17E
R25	18B
R26	18E
R27	19E
R28	19C
R29	19D
R30	20E
R31	21B
R32	22B
R33	22B
R34	22E
R35	23E
R36	23E
R37	24C
TP1	23C
TP2	19C
TP3	16E

REF. DESIG.	DRAWING LOCATION
PREFIX A1A22	
C34	6B
C35	6C
C36	6F
C37	6G
C38	6H
C46	6A
R21	6C
R22	6C
R23	6D
R24	6D
R25	6D
R26	6E
R27	6E
R28	6F
R29	6F
R30	6G
R31	6G
R32	6H
R33	4B
R50	6A
S8	4A
PREFIX A1	
C33	2B
C40	14G
J2	1B
J3	1C
P2	8D
S9	3D
XA11	8E, 14G, 22G, 24C

NOTES

1. Component values expressed in ohms and picofarads unless otherwise noted.
2. —— – – —— indicates assembly boundaries.
3. Names of panel controls and connectors are enclosed in boxes.
4. Primary signal paths weighted. Feedback paths weighted and dashed.
5. Dc voltages are preceded by "+" or "-".
6. The letters CW or CCW, placed adjacent to the appropriate terminals of A1A22R33 and A1A11R6, indicate the direction of rotation viewed from the shaft end.
7. Dc voltages are measured with a CCUH-801 Dc Differential Voltmeter.
8. Parts location information is given in map-type coordinates in accompanying table.

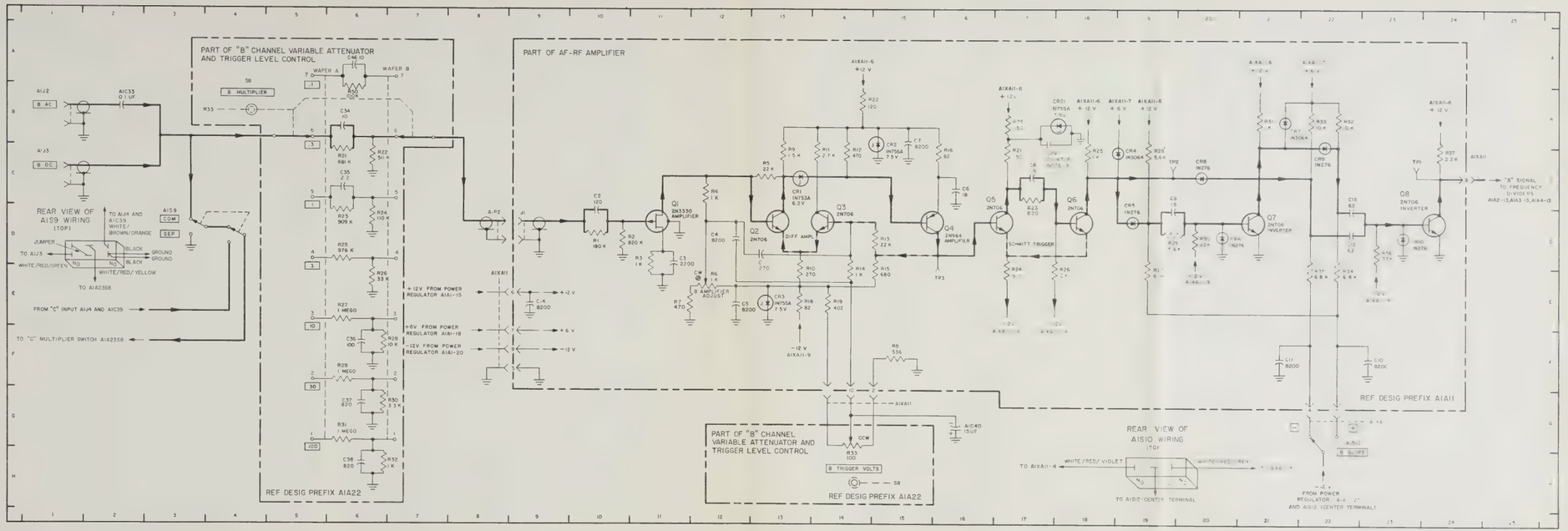

Figure 5-64. B Amplifier with A1A11 Model MP14-546L4 AF-Rf Amplifier, Schematic Diagram

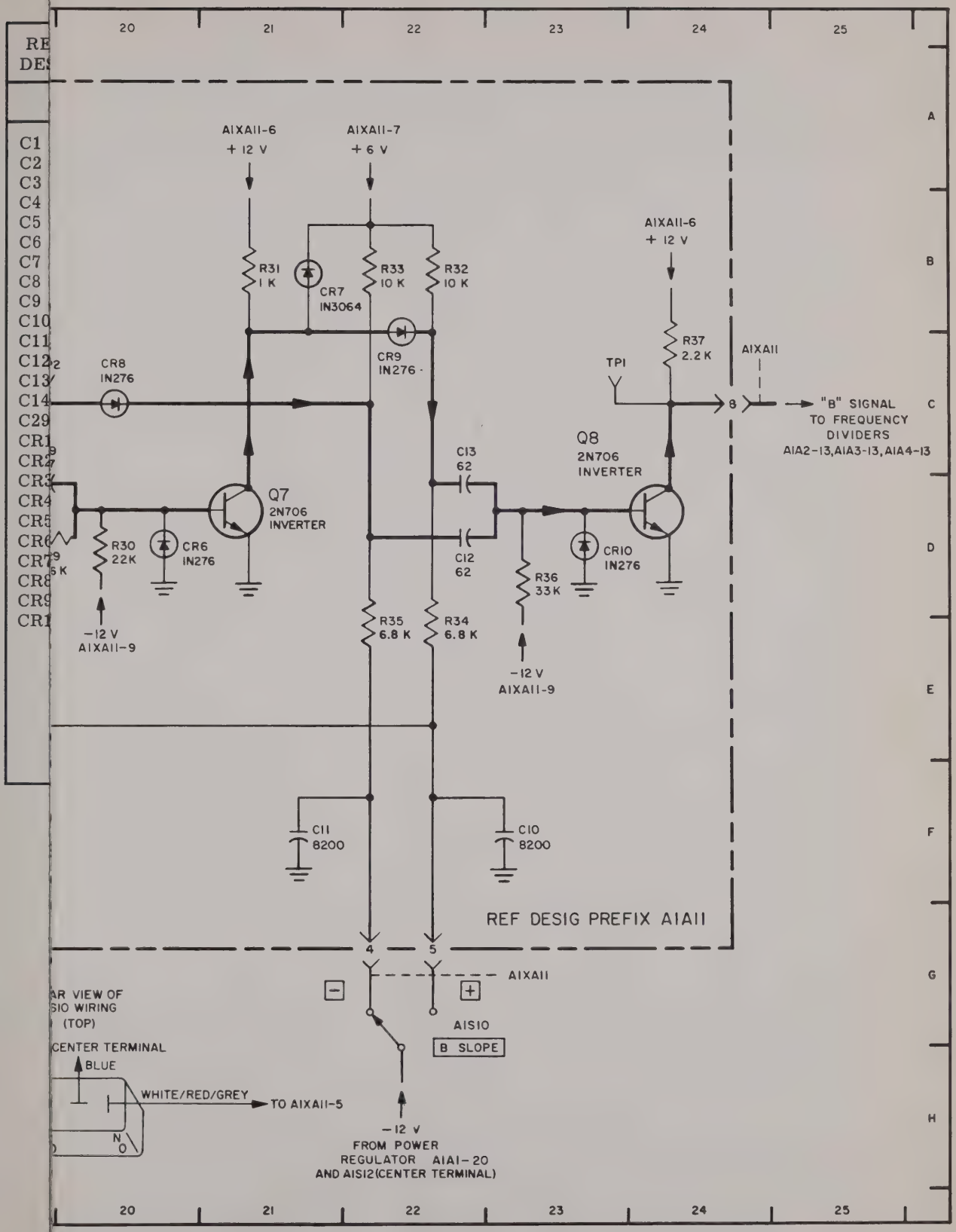

Figure 5-64A. B Amplifier with A1A11 Model MP14-546L6 (or Higher "L" Number) Af-Rf Amplifier, Schematic Diagram

PARTS LOCATION INDEX

REF. DESIG.	DRAWING LOCATION	REF. DESIG.	DRAWING LOCATION	REF. DESIG.	DRAWING LOCATION
PREFIX A1A11					
C1	13E	CR21	18B	R16	16C
C2	10C	J1	9D	R18	13E
C3	11D	Q1	11C	R19	14E
C4	12D	Q2	12D	R21	17C
C5	12E	Q3	14D	R22	15B
C6	16C	Q4	16D	R23	17D
C7	15B	Q5	16C	R24	17E
C8	17C	Q6	18C	R25	18B
C9	19C	Q7	21D	R26	18E
C10	23F	Q8	23C	R27	19E
C11	21F	R1	10D	R28	19C
C12	22D	R2	10D	R29	19D
C13	22C	R3	11D	R30	20E
C14	9E	R4	12C	R31	21B
C29	17C	R5	13C	R32	22B
CR1	13C	R6	12E	R33	22B
CR2	15B	R7	12E	R34	22E
CR3	13E	R8	15F	R35	22E
CR4	19C	R9	13C	R36	23E
CR5	19C	R10	13E	R37	24C
CR6	20D	R11	14C	R75	17B
CR7	21B	R12	14C	TP1	23C
CR8	20C	R13	15D	TP2	18C
CR9	22C	R14	15E	TP3	16E
CR10	23D	R15	15E		

REF. DESIG.	DRAWING LOCATION
PREFIX A1A22	
C34	6B
C35	6C
C36	6F
C37	6G
C38	6H
C46	6A
R21	6C
R22	6C
R23	6D
R24	6D
R25	6D
R26	6E
R27	6E
R28	6F
R29	6F
R30	6G
R31	6G
R32	6H
R33	4B
R50	6A
S8	4A
PREFIX A1	
C33	2B
C40	14G
J2	1B
J3	1C
P2	8D
S9	3D
XA11	8E, 14G, 22G, 24C

NOTES

1. Component values expressed in ohms and picofarads unless otherwise noted.
2. ——— -- ——— indicates assembly boundaries.
3. Names of panel controls and connectors are enclosed in boxes.
4. Primary signal paths weighted. Feedback paths weighted and dashed.
5. Dc voltages are preceded by "+" or "–".
6. The letters CW or CCW, placed adjacent to the appropriate terminals of A1A22R33 and A1A11R6, indicate the direction of rotation viewed from the shaft end.
7. Dc voltages are measured with a CCUH-801 Dc Differential Voltmeter.
8. Parts location information is given in map-type coordinates in accompanying table.

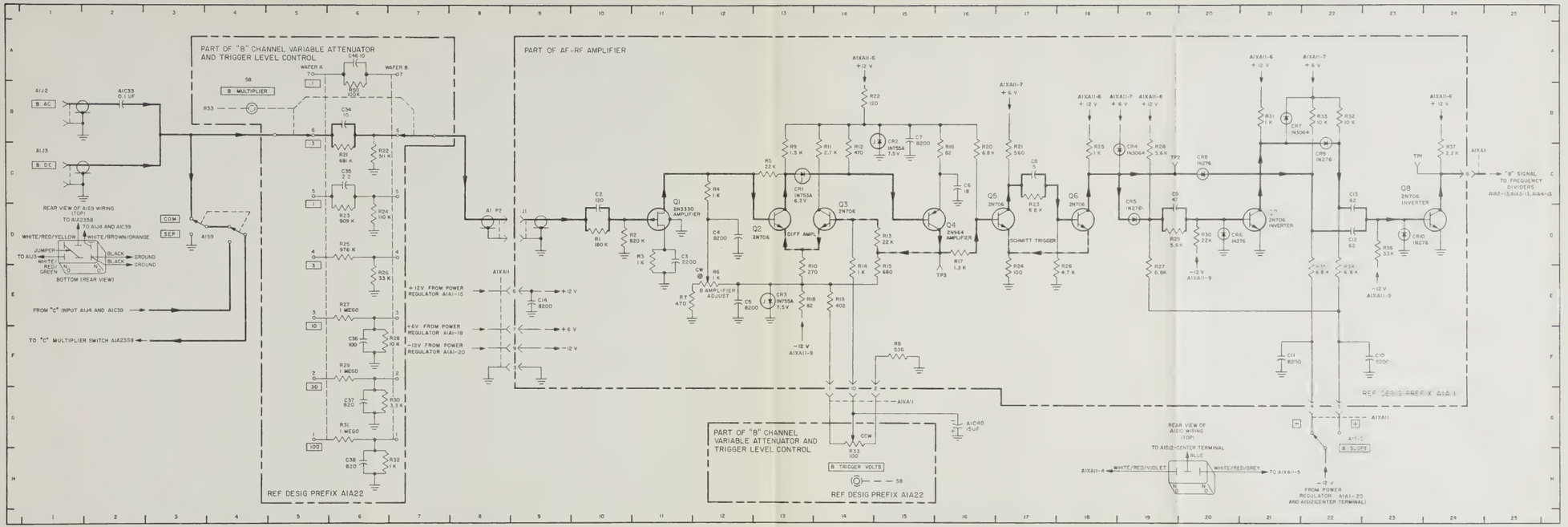

Figure 5-64A. B Amplifier with A1A11 Model MP14-546L6 (or Higher "L" Number) Af-Rf Amplifier, Schematic Diagram

5-122A, 5-122B

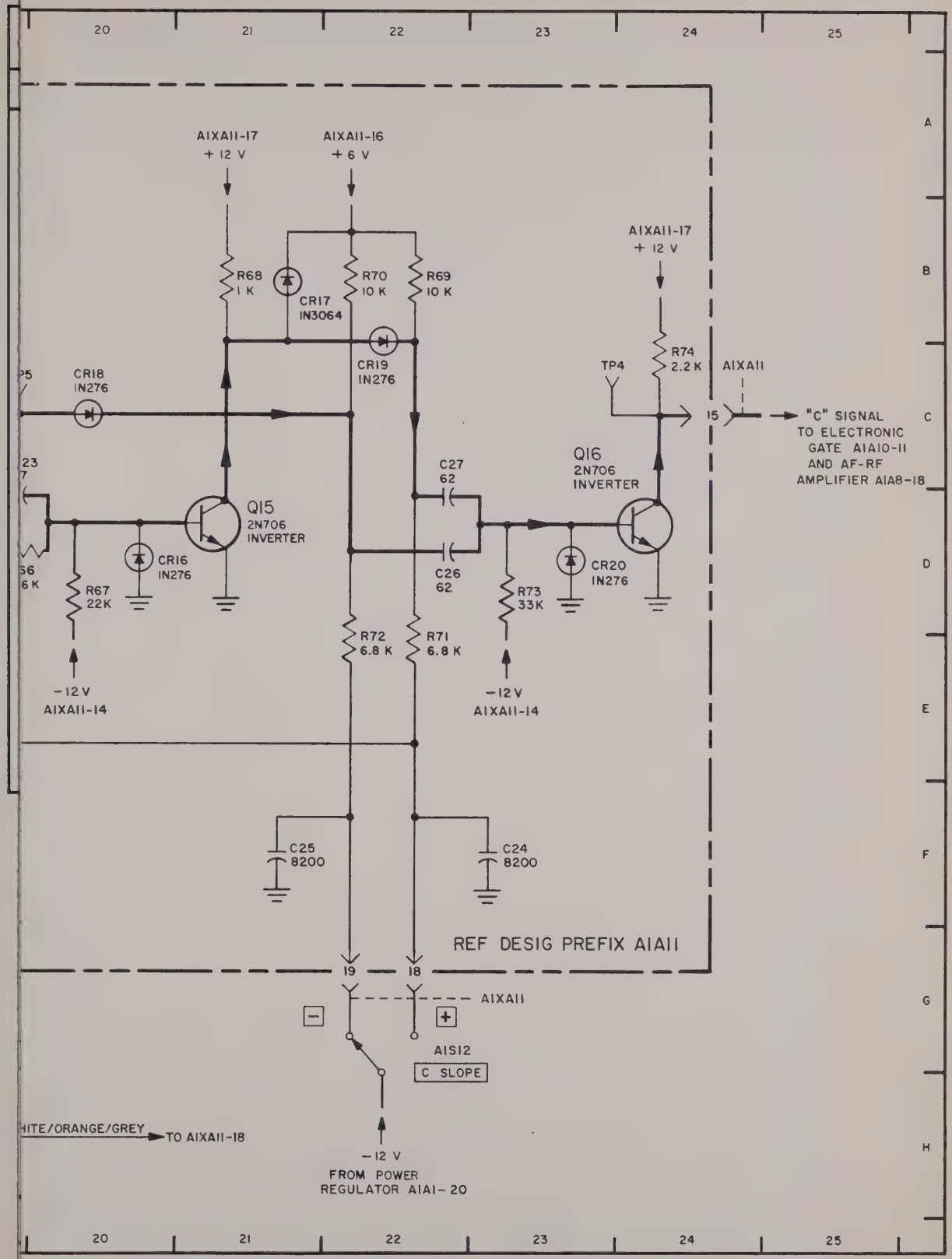

Figure 5-65. C Amplifier with A1A11 Model MP14-546L4 AF-RF Amplifier, Schematic Diagram

PARTS LOCATION INDEX

REF. DESIG.	DRAWING LOCATION	REF. DESIG.	DRAWING LOCATION	REF. DESIG.	DRAWING LOCATION
PREFIX A1A11					
C16	10C	Q9	11D	R54	16E
C17	11D	Q10	13D	R55	13E
C18	12D	Q11	14D	R56	14E
C19	12E	Q12	16D	R57	16C
C20	16C	Q13	16D	R58	17C
C21	15C	Q14	18D	R59	14B
C22	17C	Q15	21D	R60	17D
C23	19C	Q16	23C	R61	17E
C24	23F	R38	10D	R62	18C
C25	21F	R39	11D	R63	17E
C26	22D	R40	11E	R64	19E
C27	22C	R41	14C	R65	19C
C28	9E	R42	13C	R66	19D
CR11	13C	R43	12E	R67	20E
CR12	15C	R44	12E	R68	21B
CR13	13E	R45	15F	R69	22B
CR14	19C	R46	13C	R70	22B
CR15	19D	R47	13E	R71	22E
CR16	20D	R48	14C	R72	22E
CR17	21B	R49	14C	R73	23E
CR18	20C	R50	15D	R74	24C
CR19	22C	R51	14E	TP4	23C
CR20	23D	R52	15E	TP5	19C
J2	9D	R53	16C	TP6	16E

REF. DESIG.	DRAWING LOCATION
PREFIX A1A23	
C34	6B
C35	6C
C36	6F
C37	6G
C38	6H
C46	6A
R21	6C
R22	6C
R23	6D
R24	6D
R25	6D
R26	6E
R27	6E
R28	6F
R29	6F
R30	6G
R31	6G
R32	6H
R33	4B
R50	6A
S8	4A
PREFIX A1	
C39	2B
C41	16G
J4	1C
J5	1B
P3	8D
XA11	8E, 14G 22G, 24C

NOTES

1. Component values expressed in ohms and picofarads unless otherwise noted.
2. ——— -- ——— indicates assembly boundaries.
3. Names of panel controls and connectors are enclosed in boxes.
4. Primary signal paths weighted. Feedback paths weighted and dashed.
5. Dc voltages are preceded by "+" or "−".
6. The letters CW or CCW, placed adjacent to the appropriate terminals of A1A23R33 and A1A11R43, indicate the direction of rotation viewed from the shaft end.
7. Dc voltages are measured with a CCUH-801 Dc Differential Voltmeter.
8. Parts location information is given in map-type coordinates in accompanying table.
9. C22 is 27 picofarads on units with A1A11 part No. MP14-546L4.

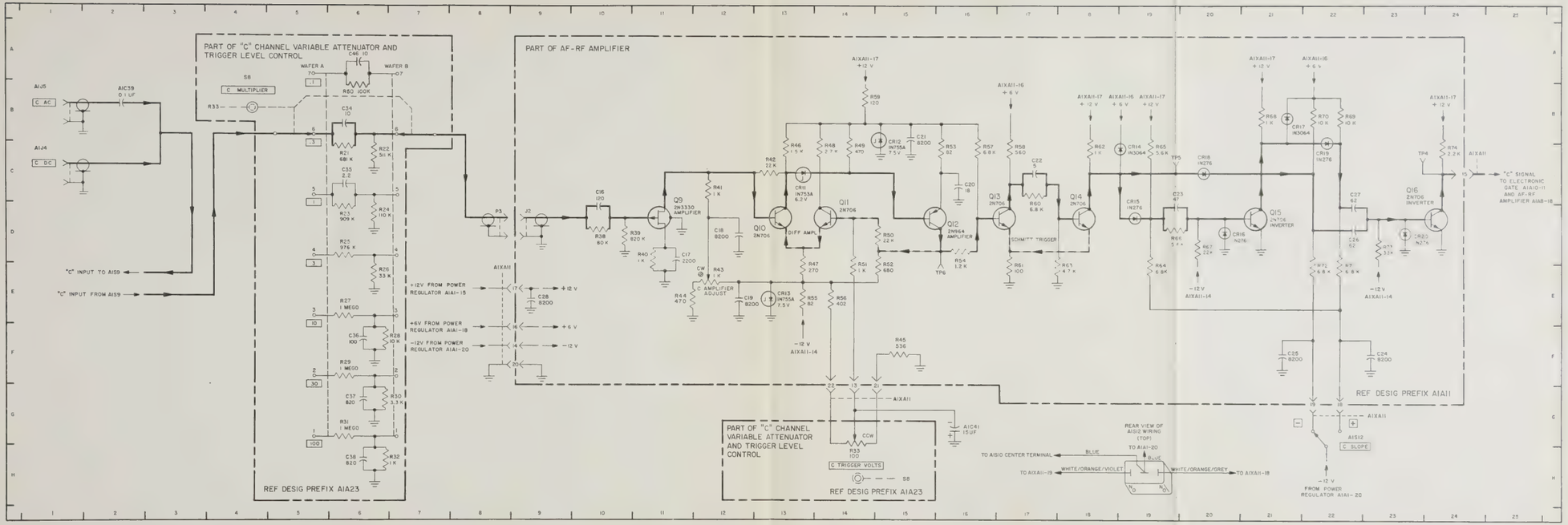

Figure 5-65. C Amplifier with A1A11 Model MP14-546L4 AF-RF Amplifier, Schematic Diagram

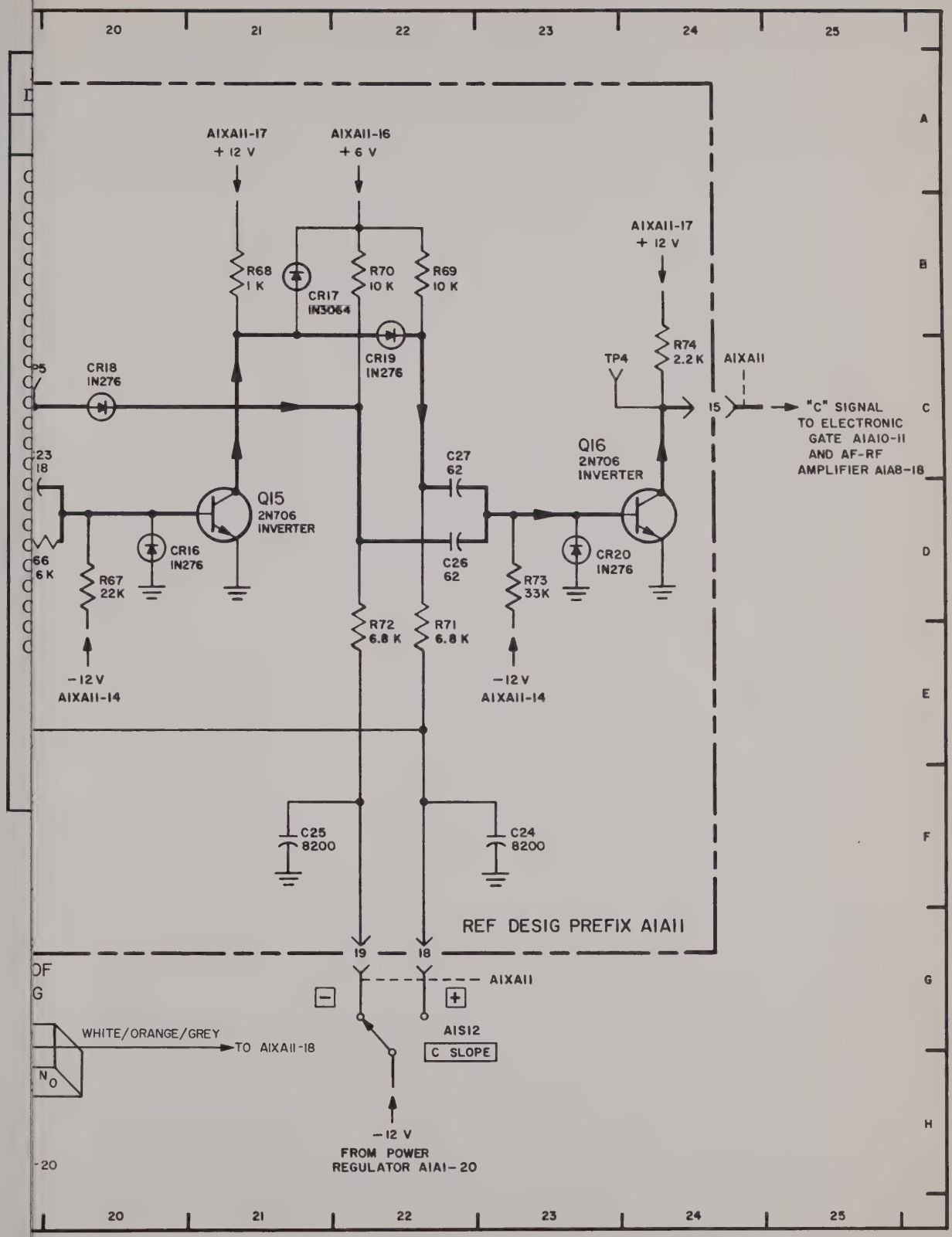

Figure 5-65A. C Amplifier with A1A11 Model MP14-546L6 (or Higher "L" Number) Af-Rf Amplifier, Schematic Diagram

PARTS LOCATION INDEX

REF. DESIG.	DRAWING LOCATION	REF. DESIG.	DRAWING LOCATION	REF. DESIG.	DRAWING LOCATION
PREFIX A1A11					
C15	13E	J2	9D	R53	16C
C16	10C	Q9	11D	R54	16E
C17	11D	Q10	13D	R55	13E
C18	12D	Q11	14D	R56	14E
C19	12E	Q12	16D	R58	17C
C20	16C	Q13	16D	R59	14B
C21	15C	Q14	18D	R60	17D
C22	17C	Q15	21D	R61	17E
C23	19C	Q16	23C	R62	18C
C24	23F	R33	13C	R63	17E
C25	21F	R38	10D	R64	19E
C26	22D	R39	11D	R65	19C
C27	22C	R40	11E	R66	19D
C28	9E	R41	14C	R67	20E
CR11	13C	R42	13C	R68	21B
CR12	13C	R43	12E	R69	22B
CR13	13E	R44	12E	R70	22B
CR14	19C	R45	15F	R71	22E
CR15	19D	R47	13E	R72	22E
CR16	20D	R48	14C	R73	23E
CR17	21B	R49	14C	R74	24C
CR18	20C	R50	15D	TP4	23C
CR19	22C	R51	14E	TP5	19C
CR20	23D	R52	15E	TP6	16E

REF. DESIG.	DRAWING LOCATION
PREFIX A1A23	
C34	6B
C35	6C
C36	6F
C37	6G
C38	6H
C46	6A
R21	6C
R22	6C
R23	6D
R24	6D
R25	6D
R26	6E
R27	6E
R28	6F
R29	6F
R30	6G
R31	6G
R32	6H
R33	4B
R90	6A
S8	4A
PREFIX A1	
C39	2B
C41	16G
J4	1C
J5	1B
P3	8D
XA11	8E, 14G, 22G, 24C

NOTES

1. Component values expressed in ohms and picofarads unless otherwise noted.
2. ——— -- ——— indicates assembly boundaries.
3. Names of panel controls and connectors are enclosed in boxes.
4. Primary signal paths weighted. Feedback paths weighted and dashed.
5. Dc voltages are preceded by "+" or "−".
6. The letters CW or CCW, placed adjacent to the appropriate terminals of A1A23R46 and A1A11R43, indicate the direction of rotation viewed from the shaft end.
7. Dc voltages are measured with a CCUH-801 Dc Differential Voltmeter.
8. Parts location information is given in map-type coordinates in accompanying table.

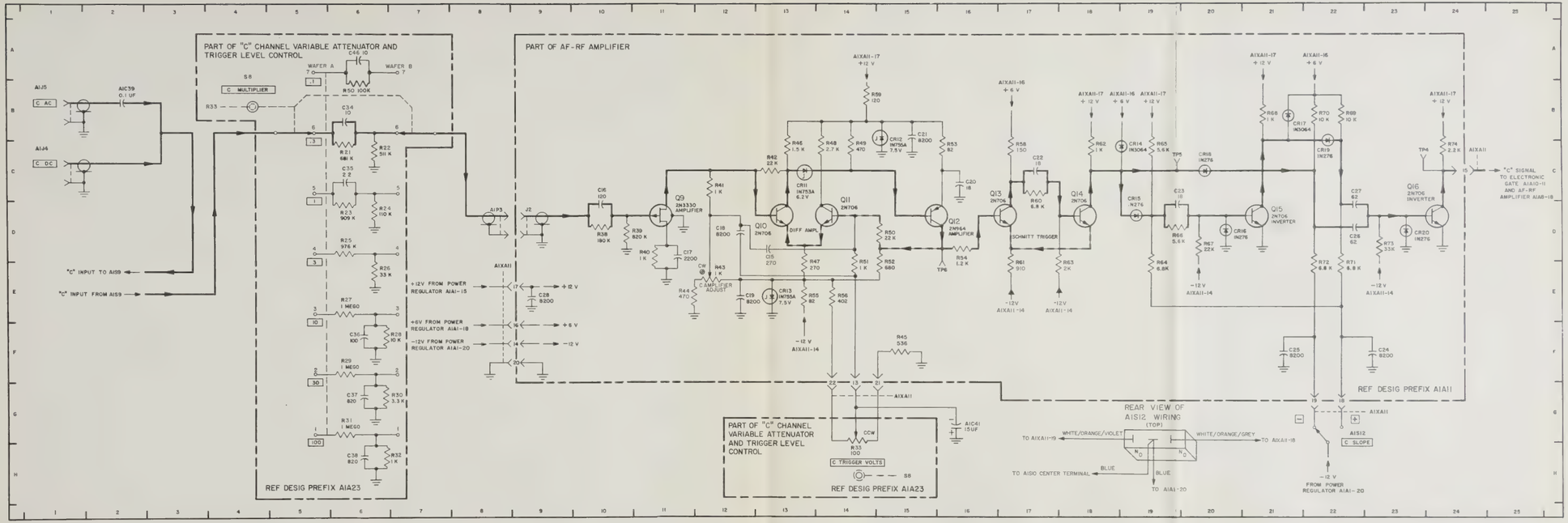

Figure 5-65A. C Amplifier with A1A11 Model MP14-546L6 (or Higher "L" Number) Af-Rf Amplifier, Schematic Diagram

5-124A, 5-124B

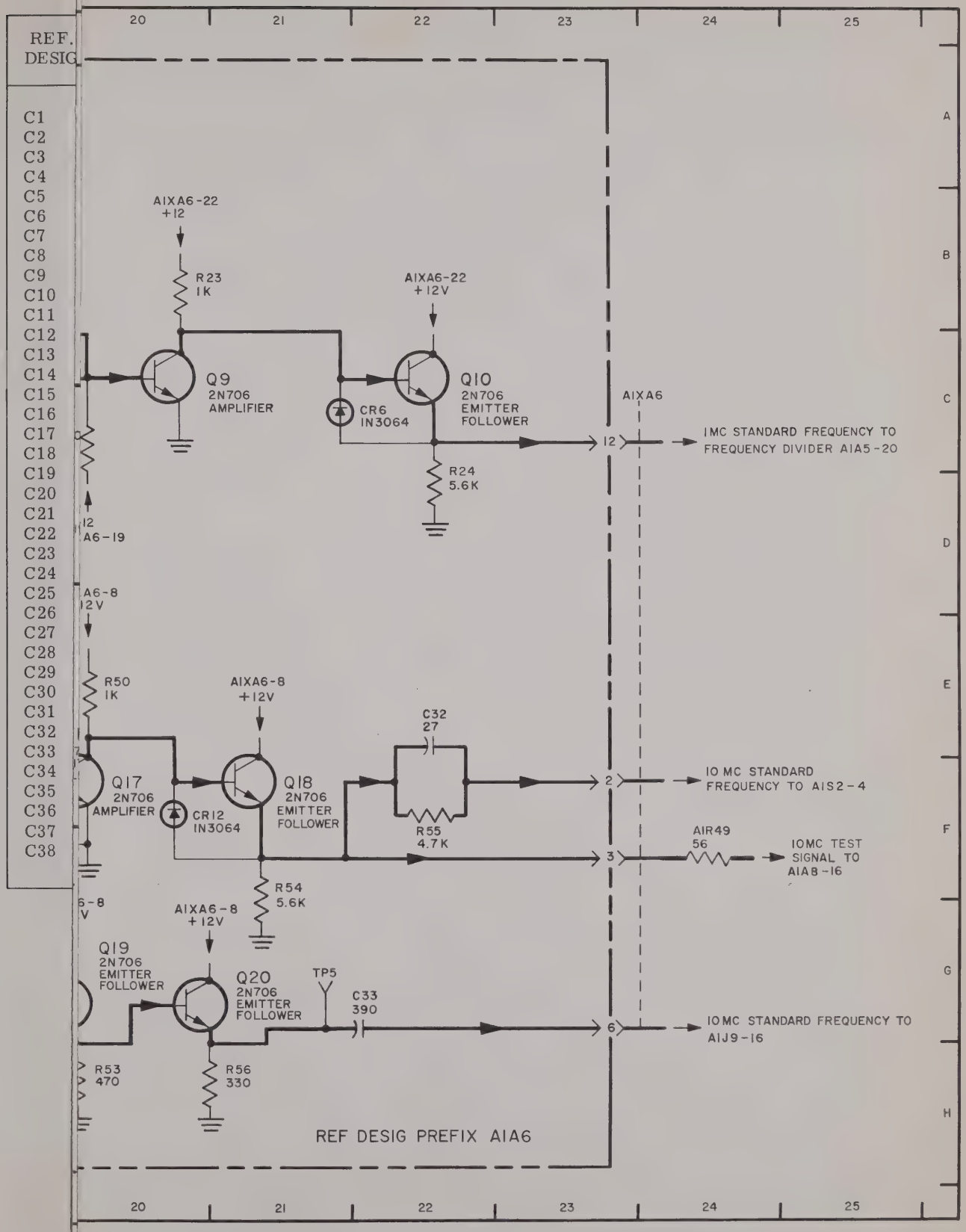

Figure 5-66. 10-Mc and 1-Mc Multiplier, Schematic Diagram

PARTS LOCATION INDEX

REF. DESIG.	DRAWING LOCATION
C1	4C
C2	6B
C3	6C
C4	8C
C5	9B
C6	10B
C7	11B
C8	11C
C9	13C
C10	15B
C11	15C
C12	17B
C13	17C
C14	19B
C15	19B
C16	5F
C17	7F
C18	8E
C19	8F
C20	10F
C21	12E
C22	12E
C23	13F
C24	15F
C25	15F
C26	14F
C27	16E
C28	16E
C29	18E
C30	19F
C31	19G
C32	22F
C33	22G
C34	3E
C35	3E
C36	4E
C37	4E
C38	4E

REF. DESIG.	DRAWING LOCATION
C39	3F
C40	3F
C41	3E
C42	3E
C43	4E
C44	4E
C45	19B
C46	19E
C47	15E
C48	16E
C49	18E
CR1	7C
CR2	8C
CR3	12C
CR4	14C
CR5	22C
CR6	9F
CR7	9G
CR8	12F
CR9	13F
CR10	19F
CR11	19F
CR12	20F
L1	10B
L2	11B
L3	16B
L4	18B
L5	11E
L6	14E
L7	16E
L8	19E
Q1	6C
Q2	8C
Q3	11C
Q4	11C
Q5	13C
Q6	15C
Q7	16C
Q8	18C

REF. DESIG.	DRAWING LOCATION
Q9	20C
Q10	22C
Q11	6F
Q12	8F
Q13	11F
Q14	14F
Q15	16F
Q16	18F
Q17	20F
Q18	21F
Q19	20G
Q20	20G
R1	4C
R2	4C
R3	5C
R4	5C
R5	6B
R6	6C
R7	6C
R8	8B
R9	8C
R10	9B
R11	10B
R12	11C
R13	12C
R14	13B
R15	14C
R16	16B
R17	16C
R18	17C
R19	17B
R20	17C
R21	18C
R22	20C
R23	20B
R24	22C
R25	6E

REF DESIG.	DRAWING LOCATION
R26	6F
R27	6F
R28	7F
R29	7F
R30	8E
R31	8G
R32	9E
R33	9G
R34	9G
R35	10G
R36	11F
R37	11F
R38	12F
R39	14F
R40	14F
R41	15G
R42	15E
R43	15F
R44	16F
R45	17E
R46	17F
R47	18F
R48	19E
R49	18G
R50	20E
R51	19G
R52	19H
R53	20H
R54	21G
R55	22F
R56	21H
R57	19C
TP1	12B
TP2	16B
TP3	19B
TP4	19F
TP5	21G
A1J6	1C
A1R49	24F
A1S13	2C

NOTES

1. Component values expressed in ohms, picofarads, and microhenries unless otherwise noted.
2. —— - —— indicates etched circuit assembly boundaries.
3. Names of panel controls and connectors are enclosed in boxes.
4. Primary signal paths weighted.
5. Dc voltages are preceded by "+" or "−".
6. Dc voltages are measured with a CCUH-801 Dc Differential Voltmeter.
7. Parts location information is given in map-type coordinates in accompanying table.

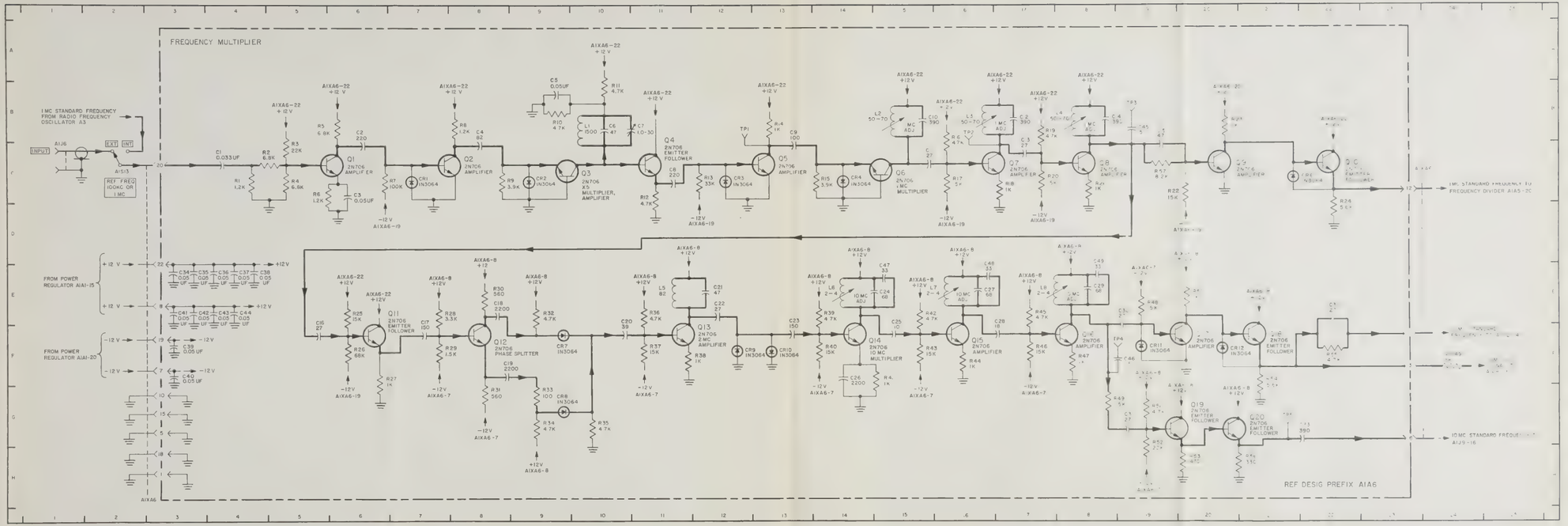

Figure 5-66. 10-Mc and 1-Mc Multiplier, Schematic Diagram

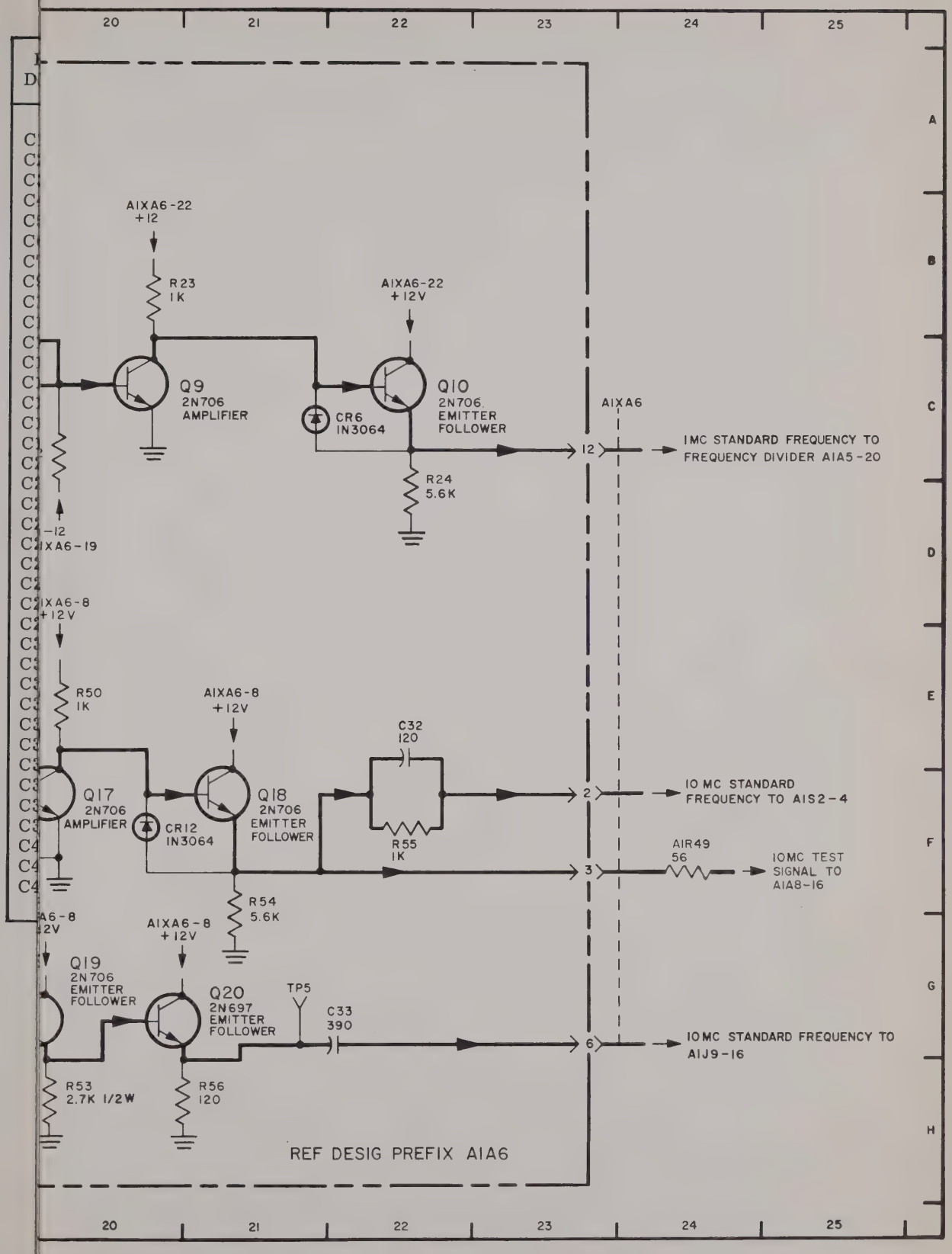

Figure 5-66A. 10-Mc and 1-Mc Multiplier with Model MP25-526L10 or Higher "L" Number Frequency Multiplier, Schematic Diagram

PARTS LOCATION INDEX

REF. DESIG.	DRAWING LOCATION
C1	4C
C2	6B
C3	6C
C4	8C
C5	9B
C6	10B
C7	11B
C9	13C
C10	15B
C12	17B
C14	18B
C15	19B
C16	5F
C17	7F
C18	8E
C19	8F
C20	10F
C21	12E
C22	12E
C23	13F
C24	15E
C26	14F
C27	16E
C28	14E
C29	18E
C30	19E
C31	19G
C32	22E
C33	22G
C34	3E
C35	3E
C36	4E
C37	4E
C38	4E
C39	3F
C40	3F
C41	3E
C42	3E
C43	4E
C44	4E
C45	19B
C46	19E
C47	15E
C48	16E
C49	18E
CR1	7C
CR2	9C
CR3	12C
CR4	14C
CR5	22C
CR7	9F
CR8	9G
CR9	12E
CR10	13F
CR11	19F
CR12	20F
L1	10B
L2	11C
L3	16B
L4	18B
L5	11E
L6	14E
L7	16E
L8	18E
Q1	6C
Q2	8C
Q3	9C
Q4	11C
Q5	13C
Q6	15C
Q7	16C
Q8	18C
Q9	20C
Q10	22C
Q11	6F
Q12	8F
Q13	11F
Q14	14F
Q15	16F
Q16	18F
Q17	20F
Q18	21F
Q19	20G
Q20	20G
R1	4C
R2	4C
R3	5C
R4	5C
R5	6B
R6	6C
R7	6C
R8	8B
R9	8C
R10	9B
R11	10B
R12	11C
R13	12C
R14	13B
R15	14C
R16	16B
R17	16C
R18	17C
R19	17B
R20	17C
R21	18C
R22	20C
R23	20B
R24	22C
R25	6E
R26	6F
R27	6F
R28	7F
R29	7F
R30	8E
R31	8G
R32	9E
R33	9G
R34	9G
R35	10G
R36	11F
R37	11F
R38	12F
R39	14F
R40	14F
R41	15G
R42	15E
R43	15F
R44	16F
R45	16F
R46	17F
R47	18F
R48	19E
R49	18G
R50	20E
R51	19G
R52	19H
R53	20H
R54	21G
R55	22F
R56	21H
R57	19C
TP1	12B
TP2	16B
TP3	19B
TP4	19F
A1J6	1C
A1R49	24F
A1S13	2C
A1XA6	3H. 23C

NOTES

1. Component values expressed in ohms, picofarads, and microhenries unless otherwise noted.
2. ——— – – ——— indicates etched circuit assembly boundaries.
3. Names of panel controls and connectors are enclosed in boxes.
4. Primary signal paths weighted.
5. Dc voltages are preceded by "+" or "–".
6. Dc voltages are measured with a CCUH-801 Dc Differential Voltmeter.
7. Parts location information is given in map-type coordinates in accompanying table.
8. Alternate value supplied for C3, C5, and C34 through C44 is 0.05 μf. Use 0.047 μf for replacement.

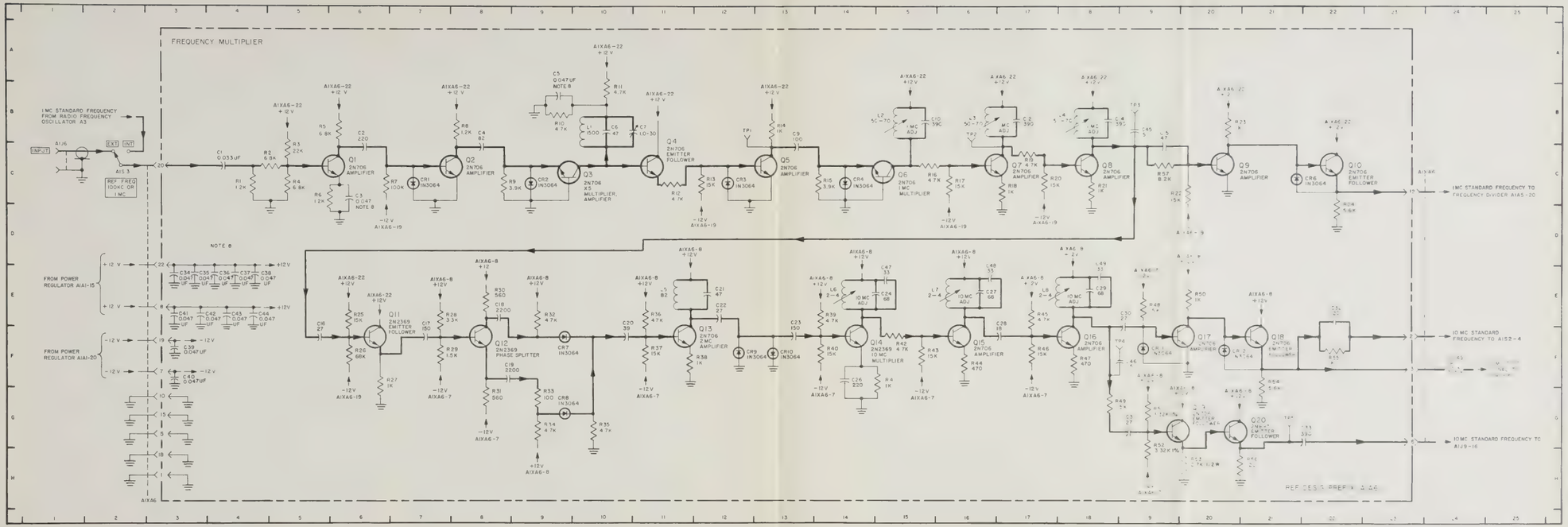

Figure 5-66A. 10-Mc and 1-Mc Multiplier with Model MP25-526L10 or Higher "L" Number Frequency Multiplier, Schematic Diagram

5-126A, 5-126B

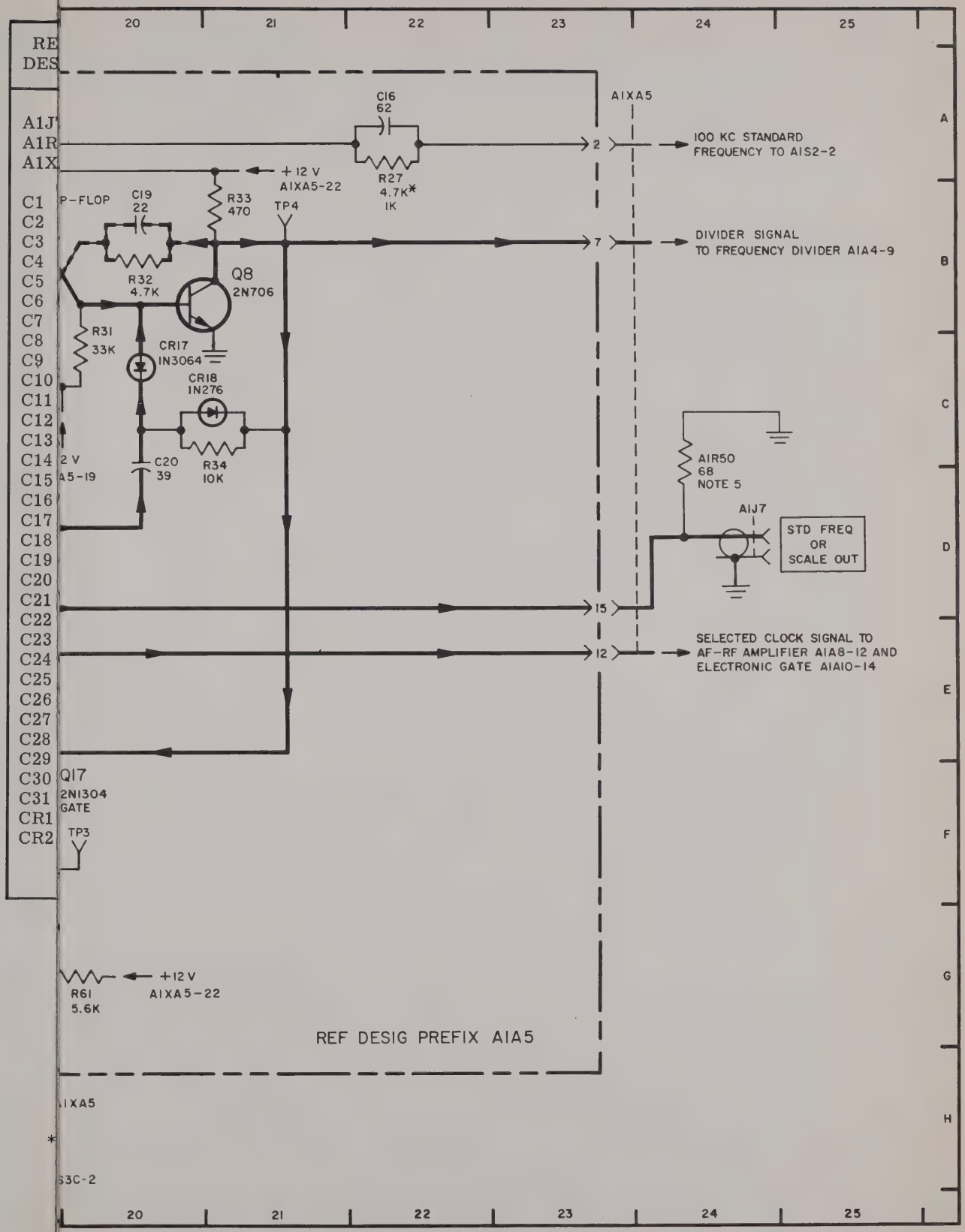

Figure 5-67. Scaler, Frequency Divider A1A5, Schematic Diagram

PARTS LOCATION INDEX

REF. DESIG.	DRAWING LOCATION
A1J7	24D
A1R50	24D
A1XA5	2A, 23A
	20H
C1	3B
C2	3C
C3	6D
C4	7B
C5	7D
C6	8B
C7	8C
C8	11B
C9	11C
C10	12B
C11	12C
C12	15B
C13	15D
C14	16B
C15	16D
C16	22A
C17	19B
C18	19D
C19	20B
C20	20D
C21	3C
C22	4F
C23	8E
C24	9E
C25	10E
C26	4B
C27	16E
C28	15G
C29	17E
C30	17G
C31	13G
CR1	6C
CR2	7C

REF. DESIG.	DRAWING LOCATION
CR3	8C
CR4	8C
CR5	10C
CR6	11C
CR7	11D
CR8	12C
CR9	14D
CR10	12C
CR11	14C
CR12	15C
CR13	16C
CR14	16C
CR15	18C
CR16	19C
CR17	20C
CR18	20C
CR19	6F
CR20	15F
CR21	16G
CR22	17F
CR23	12G
CR24	15G
Q1	6B
Q2	9B
Q3	10B
Q4	13B
Q5	14B
Q6	6E
Q7	17B
Q8	21B
Q9	6E
Q10	7F
Q11	9F
Q12	10E
Q13	11E
Q14	15F
Q15	16F

REF. DESIG.	DRAWING LOCATION
Q16	13F
Q17	19F
R1	6C
R2	6B
R3	6D
R4	7B
R5	7C
R6	8C
R7	8B
R8	9B
R9	9D
R10	10D
R11	10B
R12	11B
R13	11C
R14	12C
R15	12C
R16	13B
R17	12C
R18	14D
R19	14B
R20	15B
R21	15C
R22	16C
R23	16C
R24	17B
R25	17D
R26	18D
R27	22B
R28	18B
R29	19C
R30	19C
R31	20C
R32	20B
R33	21B
R34	20D
R35	7E

REF. DESIG.	DRAWING LOCATION
R36	6E
R37	6E
R38	6F
R39	6F
R40	8F
R41	8F
R42	8E
R43	9F
R44	9E
R45	9F
R46	10E
R47	10E
R48	10F
R49	14D
R50	11E
R51	12F
R52	15E
R53	15E
R54	16F
R55	16F
R56	16F
R57	17F
R58	17F
R59	17E
R60	17F
R61	19G
R62	13F
R63	13F
R64	12F
R65	19F
R66	18F
R67	18G
R68	4E
TP1	7E
TP2	15E
TP3	20F
TP4	21B

NOTES

1. Component values expressed in ohms and picofarads unless otherwise noted.
2. Primary signal paths weighted. Feedback paths weighted and dashed.
3. Dc voltages measured with a CCUH-801 Dc Differential Voltmeter.
4. On Frequency Divider Model MP90-564L3 part values and types are indicated by the * sign.
5. On units with serial No. A4 through A13, A17, A18, A20, A21, A22, A24 through A28, A30, A31, A33, and A36: A1R50 is not included, A1A5R51 is included, and A1A5CR24 is replaced with a jumper. On all other units A1R50 and A1A5CR24 are included, and A1A5R51 is not included.

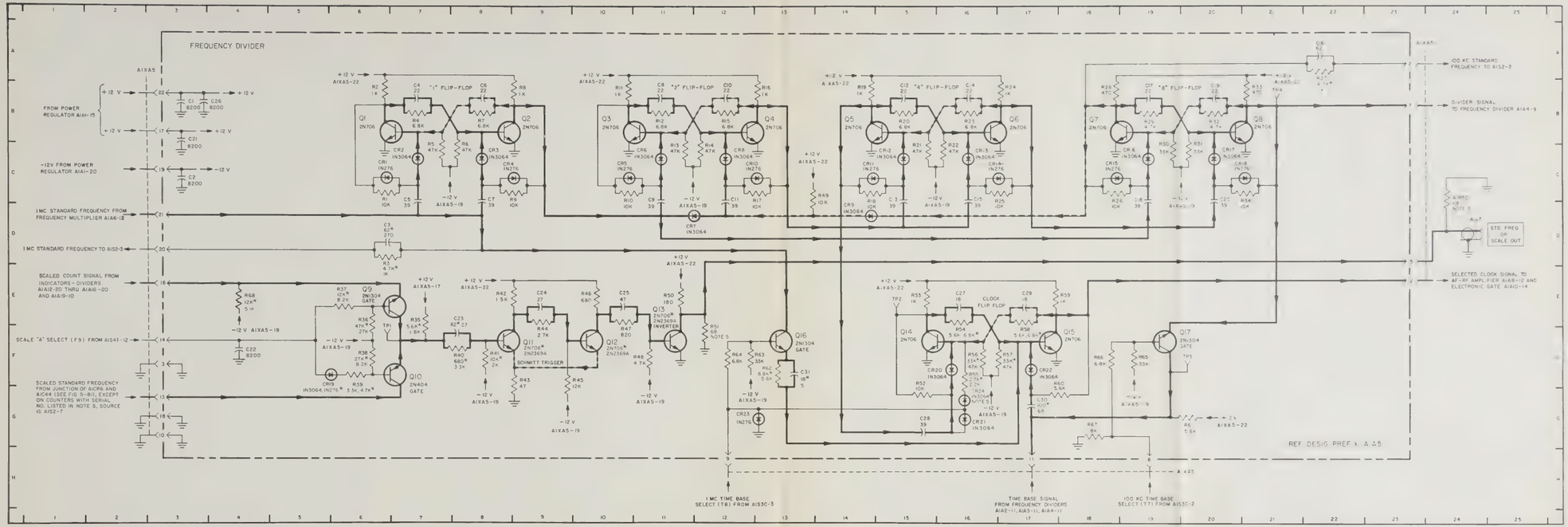

Figure 5-67. Scaler, Frequency Divider A1A5, Schematic Diagram

5-127.5-12R

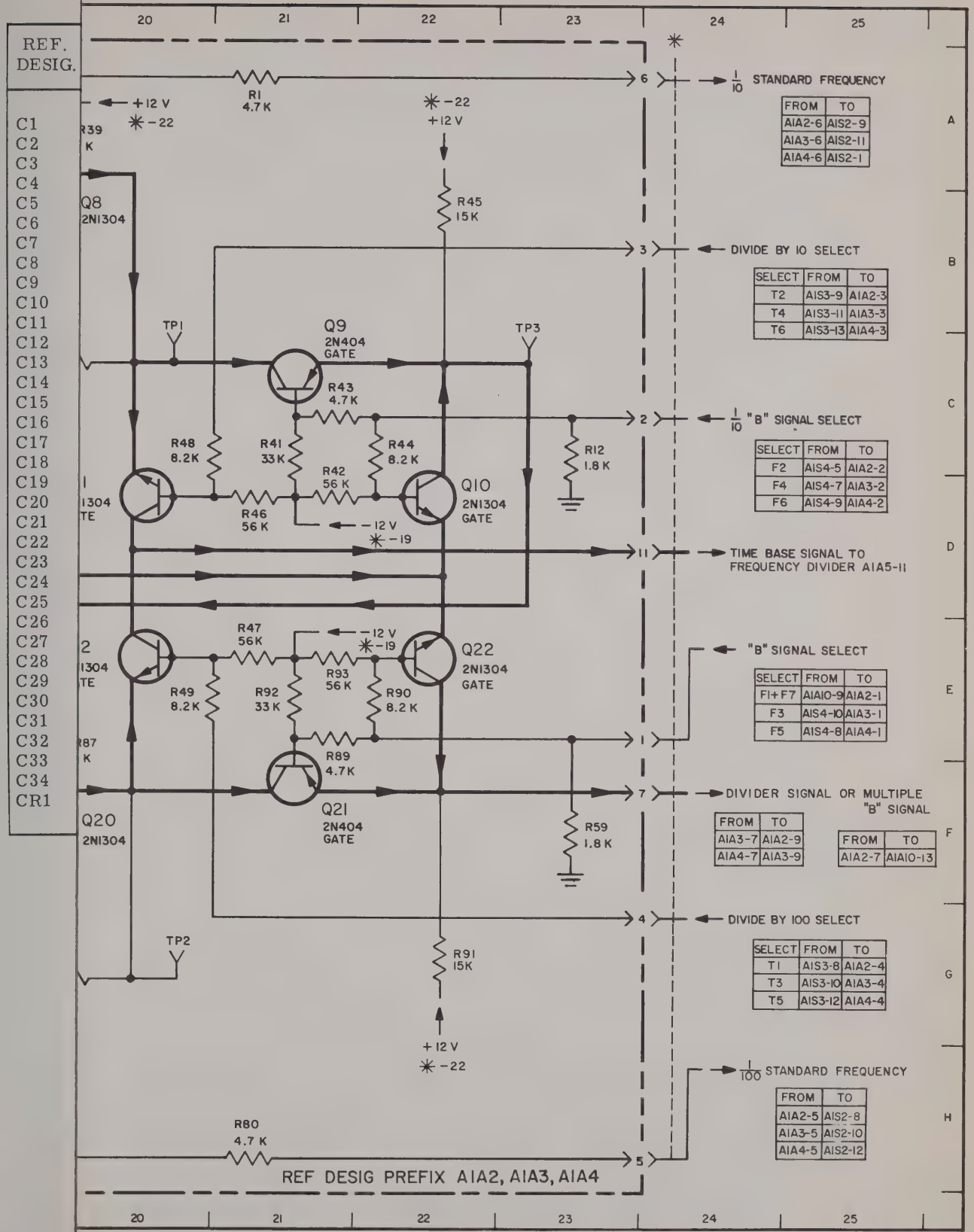

Figure 5-68. Scaler, Frequency Dividers A1A2 through A1A4, Schematic Diagram

PARTS LOCATION INDEX

REF. DESIG.	DRAWING LOCATION	REF. DESIG.	DRAWING LOCATION	REF. DESIG.	DRAWING LOCATION	REF. DESIG.	DRAWING LOCATION	REF. DESIG.	DRAWING LOCATION
C1	6A	CR2	5B	Q13	5F	R26	14B	R62	10F
C2	7A	CR3	7B	Q14	8F	R27	15B	R63	11G
C3	6C	CR4	8B	Q15	9F	R28	15C	R64	10F
C4	7C	CR5	9B	Q16	12F	R29	15B	R65	11F
C5	10A	CR6	10C	Q17	13F	R30	16A	R66	11F
C6	11A	CR7	11B	Q18	16F	R31	15C	R67	12E
C7	9C	CR8	14B	Q19	17F	R32	17A	R68	11G
C8	11C	CR9	15B	Q20	20F	R33	17C	R69	12G
C9	14A	CR10	13C	Q21	21F	R34	16B	R70	13E
C10	15A	CR11	18B	Q22	22E	R35	18C	R71	13G
C11	13C	CR12	19B	R1	21A	R36	18B	R72	14F
C12	15C	CR13	5G	R2	5A	R37	19B	R73	15G
C13	16A	CR14	6G	R3	5C	R38	19B	R74	14F
C14	19A	CR15	7G	R4	6B	R39	20A	R75	15F
C15	18C	CR16	8G	R5	6C	R40	19C	R76	15F
C16	19C	CR17	10G	R6	6B	R41	21C	R77	16E
C17	3F	CR18	10H	R7	7B	R42	21D	R78	15F
C18	3E	CR19	11G	R8	7C	R43	21C	R79	17G
C19	6F	CR20	13G	R9	7B	R44	22C	R80	21H
C20	7E	CR21	14G	R10	8A	R46	21D	R81	17E
C21	6G	CR22	15G	R11	8C	R47	21E	R82	18F
C22	7G	CR23	16G	R12	23C	R48	20C	R83	18F
C23	10E	CR24	19G	R13	9A	R49	20E	R84	19F
C24	11E	Q1	5B	R14	9C	R50	5E	R85	18G
C25	10G	Q2	8B	R15	10B	R51	5G	R86	19F
C26	11G	Q3	9B	R16	10B	R52	6F	R87	20E
C27	14E	Q4	12B	R17	11B	R53	6F	R88	19G
C28	15E	Q5	13B	R18	11C	R54	7F	R90	22E
C29	14G	Q6	16B	R19	11B	R55	6G	R91	22G
C30	15G	Q7	17B	R20	12B	R56	7F	R92	21E
C31	16E	Q8	19B	R21	11C	R57	8E	R93	21E
C32	19E	Q9	21C	R22	12C	R58	7G	TP1	20B
C33	18G	Q10	22D	R23	13A	R59	23F	TP2	60G
C34	19G	Q11	20D	R24	13C	R60	9E	TP3	23D
CR1	5B	Q12	20E	R25	14B	R61	9G		

NOTES

1. Component values expressed in ohms and picofarads unless otherwise noted.
2. - - - - indicates assembly boundaries.
3. Primary signal paths weighted. Feedback paths weighted and dashed.
4. Dc voltages are preceded by "+" or "-".
5. Dc voltages are measured with a CCUH-801 Dc Differential Voltmeter.
6. Parts location information is given in map-type coordinates in accompanying table.
7. Assemblies A1A2, A1A3, and A1A4 are identical and are all represented by figure 5-68.
8. Source and destination of divider signal shown in tabular form.

*9. Connector designations as follows: A1XA2 for assembly A1A2, A1XA3 for assembly A1A3, and A1XA4 for assembly A1A4.

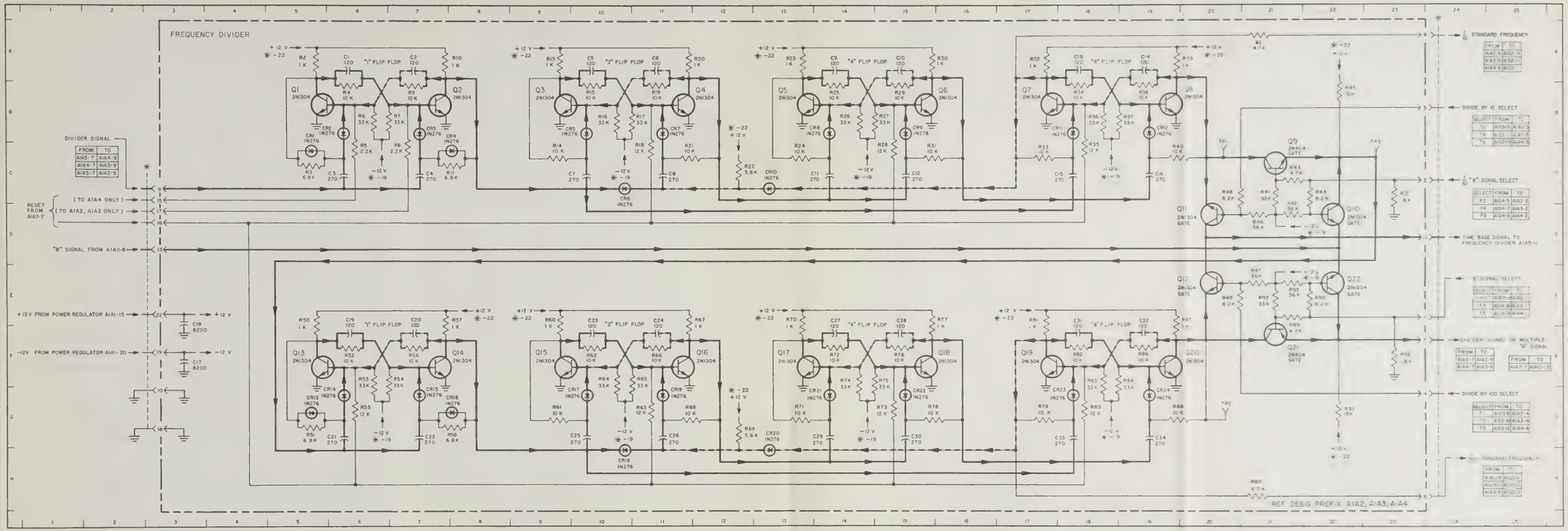

Figure 5-68. Scaler, Frequency Dividers A1A2 through A1A4, Schematic Diagram

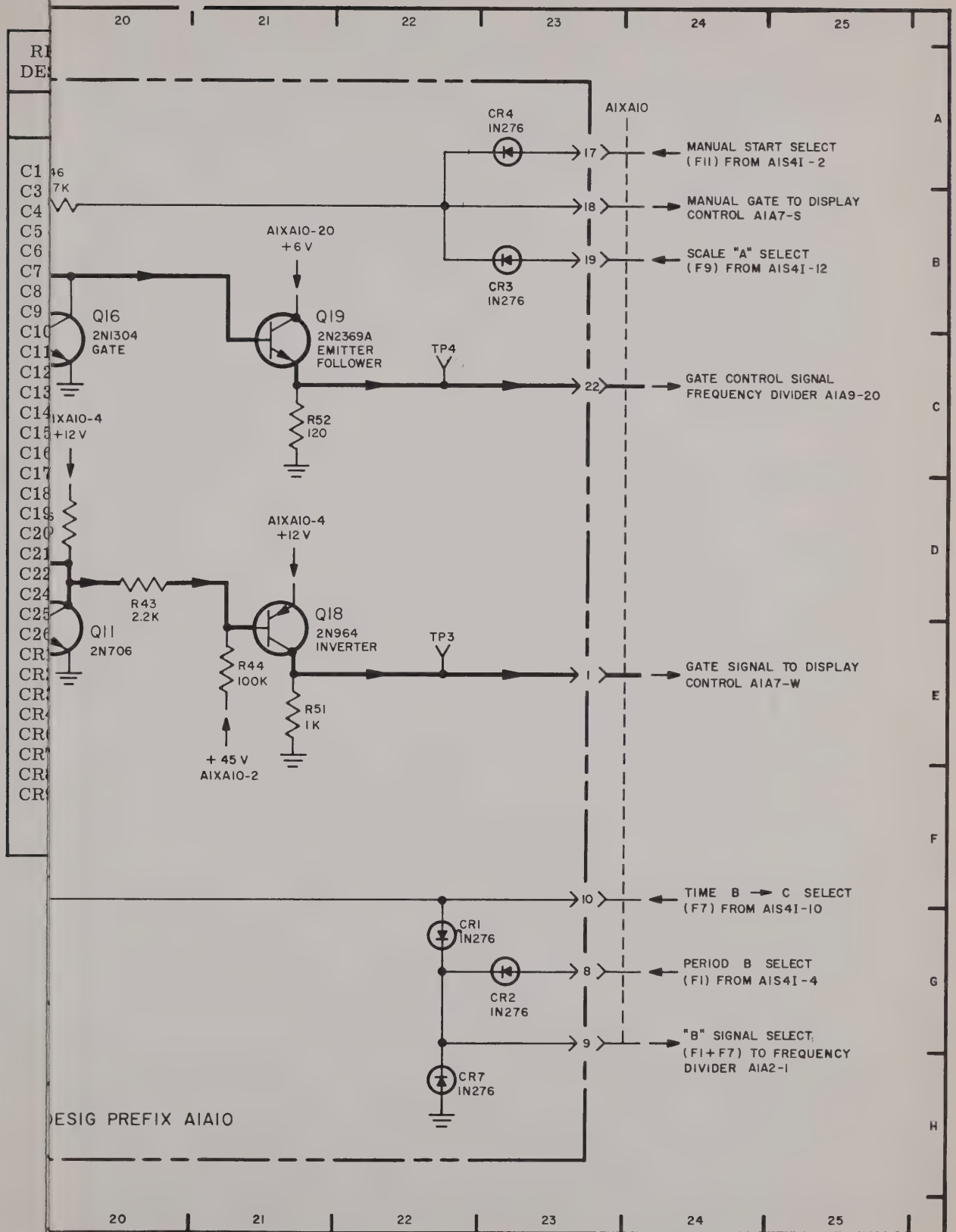

Figure 5-69. Gate Control, Schematic Diagram

PARTS LOCATION INDEX

PREFIX A1A10

REF. DESIG.	DRAWING LOCATION	REF. DESIG.	DRAWING LOCATION	REF. DESIG.	DRAWING LOCATION	REF. DESIG.	DRAWING LOCATION
C1	3G	CR10	14B	R1	9G	R36	15C
C3	19G	CR11	15C	R2	10G	R37	10C
C4	8G	CR12	15C	R3	17F	R38	9C
C5	4D	CR13	8C	R7	17G	R39	9C
C6	3D	CR14	8C	R8	9F	R40	17C
C7	14F	CR15	8D	R9	10F	R41	10C
C8	6C	CR16	10C	R10	16G	R42	10D
C9	3F	CR17	10C	R11	11F	R43	20D
C10	19D	CR18	17C	R12	11F	R44	21E
C11	15D	CR19	17C	R13	4D	R45	18B
C12	8D	CR20	17C	R14	12F	R46	20B
C13	3F	CR21	18B	R15	12G	R47	19C
C14	15B	CR22	12B	R16	4D	R48	11B
C15	9B	CR23	12D	R17	14G	R49	17D
C16	4G	Q1	10G	R18	13G	R50	12D
C17	3G	Q2	17G	R19	16G	R51	21E
C18	4F	Q4	10F	R20	16F	R52	21C
C19	17B	Q5	12F	R21	5D	R53	7G
C20	17D	Q6	13F	R22	5C	R54	18G
C21	10B	Q7	5C	R23	15F	TP1	15E
C22	10D	Q8	15F	R24	6B	TP2	16F
C24	4F	Q9	16F	R25	5B	TP3	22E
C25	4B	Q10	5C	R26	19D	TP4	22C
C26	4B	Q11	20E	R27	19E	TP5	6B
CR1	22G	Q12	14C	R28	19E		
CR2	23G	Q13	7B	R29	14B		
CR3	23B	Q14	18B	R30	8B		
CR4	23A	Q15	11C	R31	8C		
CR6	7G	Q16	20C	R32	9B		
CR7	22H	Q17	12C	R33	15C		
CR8	4E	Q18	21D	R34	16C		
CR9	4D	Q19	21C	R35	16C		

PREFIX A1

REF. DESIG.	DRAWING LOCATION
CR5	2E
R52	2E
XA10	2A, 23A

NOTES

1. Component values expressed in ohms and picofarads unless otherwise noted.
2. ———— indicates assembly boundaries.
3. Primary signal paths weighted. Feedback paths weighted and dashed.
4. Dc voltages are preceded by "+" or "–".
5. Dc voltages are measured with a CCUH-801 Dc Differential Voltmeter.
6. Parts location information is given in map-type coordinates in accompanying table.
7. Alternate value supplied for C1, C4, C9, C13, C17, C24, C25, and C26 is 0.05 μf. Use 0.047 μf for replacement.
8. a. On units with A1A10 Model MP17-525L4:
   (1) A1A10R9 is 56 k.
   (2) A1A10R32 is 8.2 k.
   (3) A1A10R40 is 3.9 k.
   b. A1R52 is supplied only on units with serial No. A1, A2, A3, A14, A16, A19, A23, A29, A32, A34, A35, A37 and up. On units with serial No. A263 and below, A1R52 is 470 k. Use 47 k resistor for replacement.

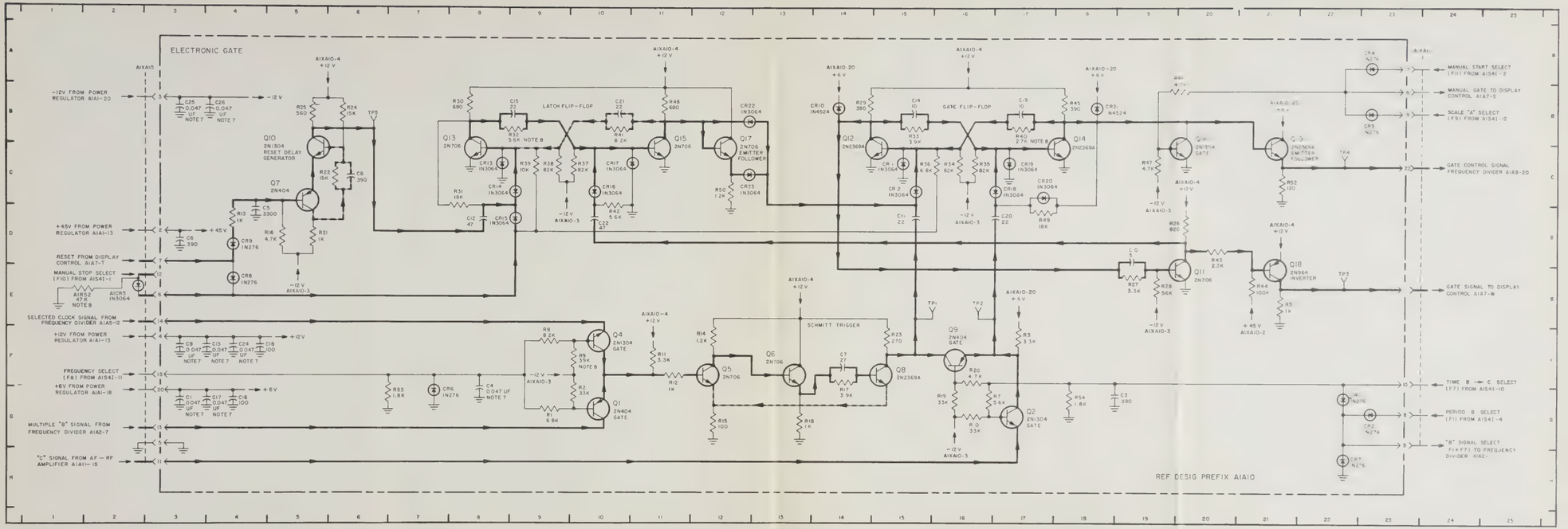

Figure 5-69. Gate Control, Schematic Diagram

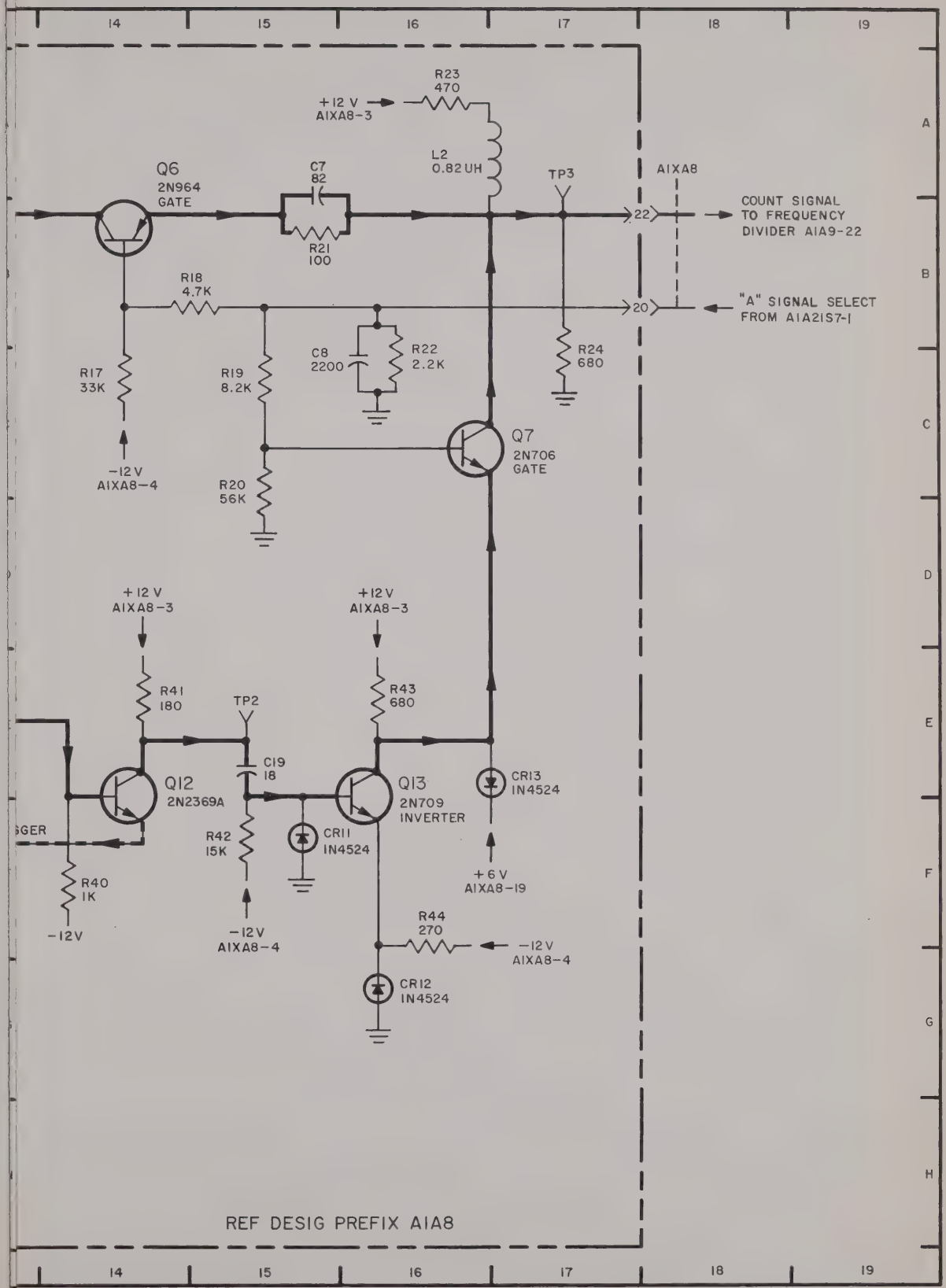

Figure 5-70. Count Control, Schematic Diagram

PARTS LOCATION INDEX

REF. DESIG.	DRAWING LOCATION
C1	4B
C2	4C
C3	5E
C4	4G
C5	10B
C6	3D
C7	15A
C8	15C
C9	7C
C10	8G
C11	6H
C12	8G
C13	5E
C14	9E
C15	9F
C16	10F
C17	10G
C18	12E
C19	15E
C20	4D
C21	4D
C22	3G
C23	3G
C24	3G
C25	3G
C26	3D

REF. DESIG.	DRAWING LOCATION
CR1	4D
CR2	5D
CR3	7D
CR4	4E
CR5	4E
CR6	4F
CR7	4F
CR8	10B
CR9	10G
CR10	13E
CR11	15F
CR12	16G
CR13	17E
E5	9E
E6	8G
L1	3C
L2	16A
Q1	5A
Q2	5B
Q3	5C
Q4	7G
Q5	11B
Q6	14A
Q7	17C
Q8	9F
Q9	11F

REF. DESIG.	DRAWING LOCATION
Q10	12E
Q11	13E
Q12	14E
Q13	16E
Q14	12B
R1	5B
R2	5B
R3	5C
R4	7C
R5	6D
R6	5D
R7	6D
R8	6D
R9	6E
R10	5G
R11	5G
R12	6G
R13	9B
R14	10C
R15	11B
R16	11A
R17	14C
R18	15B
R19	15C
R20	15D
R21	15B
R22	16C

REF. DESIG.	DRAWING LOCATION
R23	16A
R24	17C
R25	8H
R26	8E
R27	8F
R28	9E
R29	9F
R30	9D
R31	10E
R32	10F
R33	10E
R34	11F
R35	11F
R36	12D
R37	12F
R38	12E
R39	13F
R40	14F
R41	14E
R42	15F
R43	16E
R44	16F
R45	12A
TP1	6H
TP2	15E
TP3	17B
TP4	8A

NOTES

1. Component values expressed in ohms and picofarads unless otherwise noted.
2. —— -- —— indicates assembly boundaries.
3. Dc voltages are preceded by "+" or "-".
4. The letters CW, placed adjacent to the appropriate terminals of A1A8R30 indicate the direction of rotation viewed from the shaft end.
5. Dc voltages are measured with a CCUH-801 Dc Differential Voltmeter.
6. Parts location information is given in map-type coordinates in accompanying table.

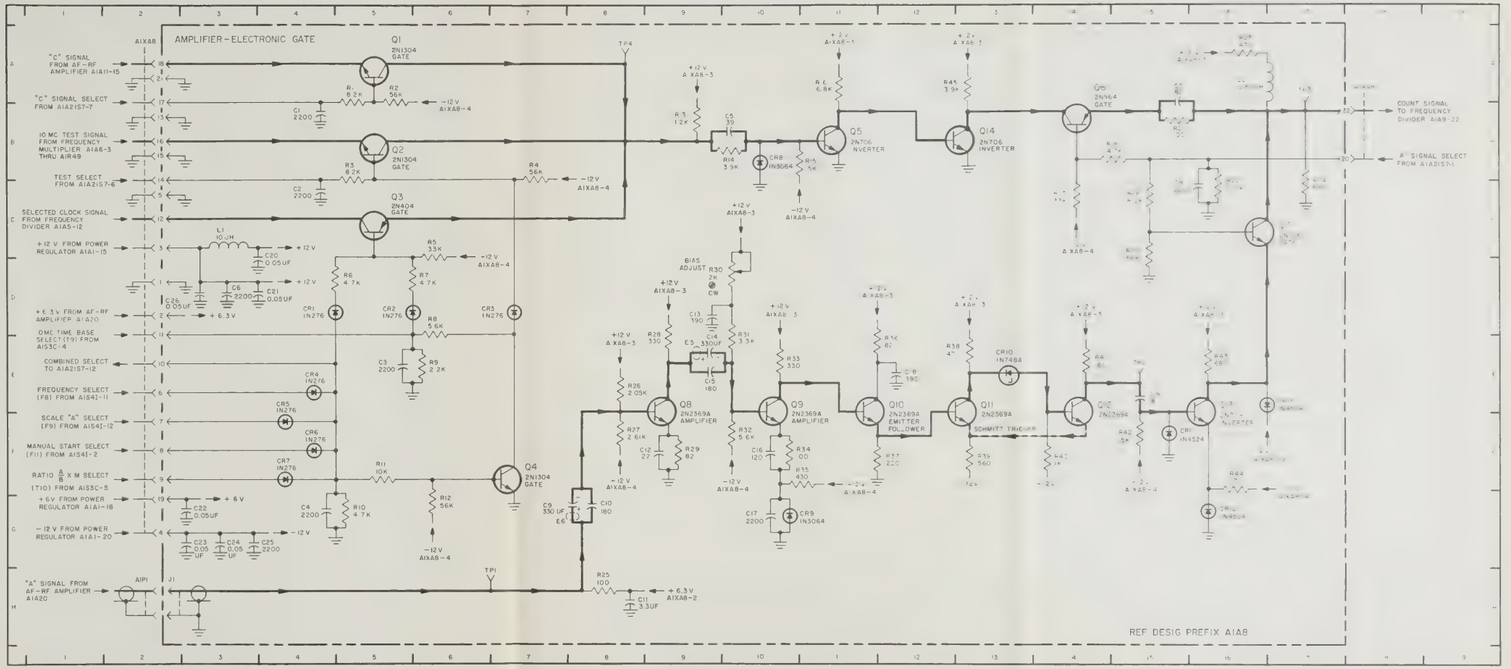

Figure 5-70. Count Control, Schematic Diagram

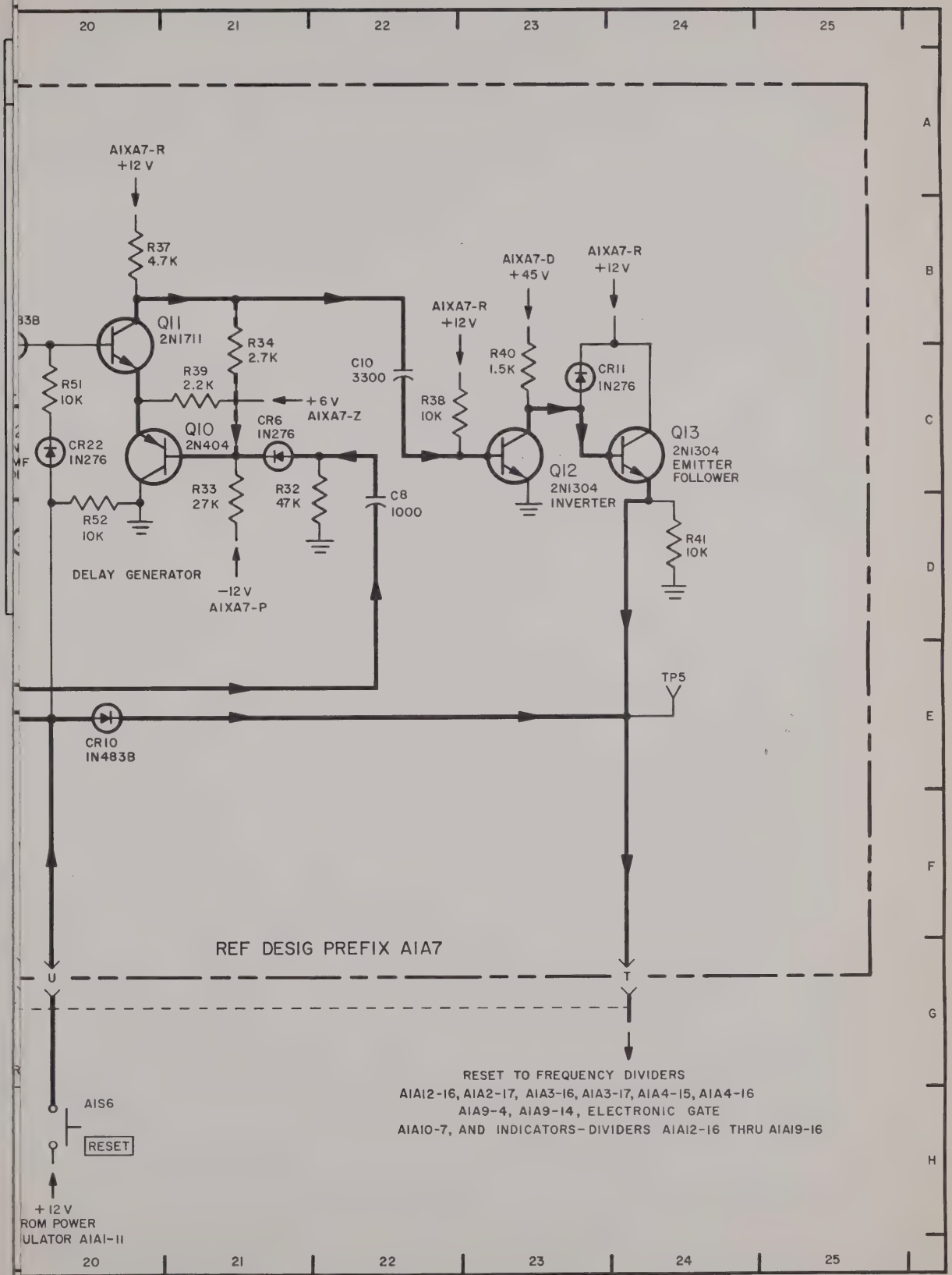

Figure 5-71. Cycle Control, Schematic Diagram

PARTS LOCATION INDEX

REF. DESIG.	DRAWING LOCATION	REF. DESIG.	DRAWING LOCATION	REF. DESIG.	DRAWING LOCATION	REF. DESIG.	DRAWING LOCATION
C1	7C	CR22	20C	R9	5D	R30	17D
C2	9C	Q1	8C	R10	10D	R31	18C
C3	10D	Q2	7C	R11	9C	R32	22D
C4	15D	Q3	6C	R12	10C	R33	21D
C5	15C	Q4	9C	R13	11C	R34	21B
C6	17C	Q5	11C	R14	10C	R35	19B
C7	17D	Q6	13C	R15	9D	R36	19C
C8	22D	Q7	14C	R16	13C	R37	20B
C9	19C	Q8	16C	R17	12D	R38	23C
C10	22C	Q9	18C	R18	13C	R39	21C
C11	3E	Q10	21C	R19	12D	R40	23C
CR1	8C	Q11	20C	R20	11D	R41	24D
CR2	5D	Q12	23C	R21	12D	R42	11D
CR3	9D	Q13	24C	R22	16C	R50	7D
CR4	11D	R1	8C	R23	14D	R51	20C
CR5	15D	R2	8F	R24	15D	R52	20D
CR6	21C	R3	7C	R25	14C	TP1	8C
CR7	19B	R4	8D	R26	16C	TP2	7E
CR8	19E	R5	7D	R27	15C	TP3	16C
CR10	20E	R6	6D	R28	18D	TP4	19C
CR11	23C	R7	5C	R29	17C	TP5	24E
CR21	7D	R8	5D				

NOTES

1. Component values expressed in ohms and picofarads unless otherwise noted.
2. —— – – —— Indicates assembly boundaries.
3. Names of panel controls and connectors are enclosed in boxes.
4. Primary signal paths weighted. Feedback paths weighted and dashed.
5. Dc voltages are preceded by "+" or "-".
6. The letters CCW, placed adjacent to the appropriate terminals of A1R1, indicate the direction of rotation viewed from the shaft end.
7. Dc voltages are measured with a CCUH-801 Dc Differential Voltmeter.
8. Parts location information is given in map-type coordinates in accompanying table.

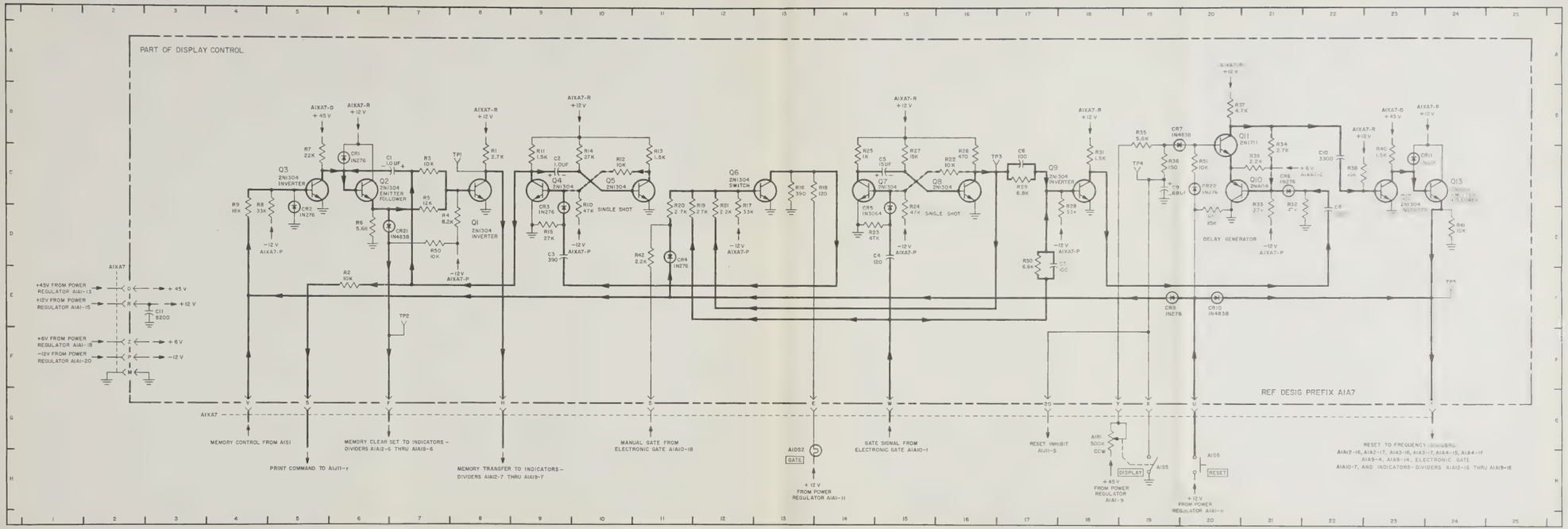

Figure 5-71. Cycle Control, Schematic Diagram

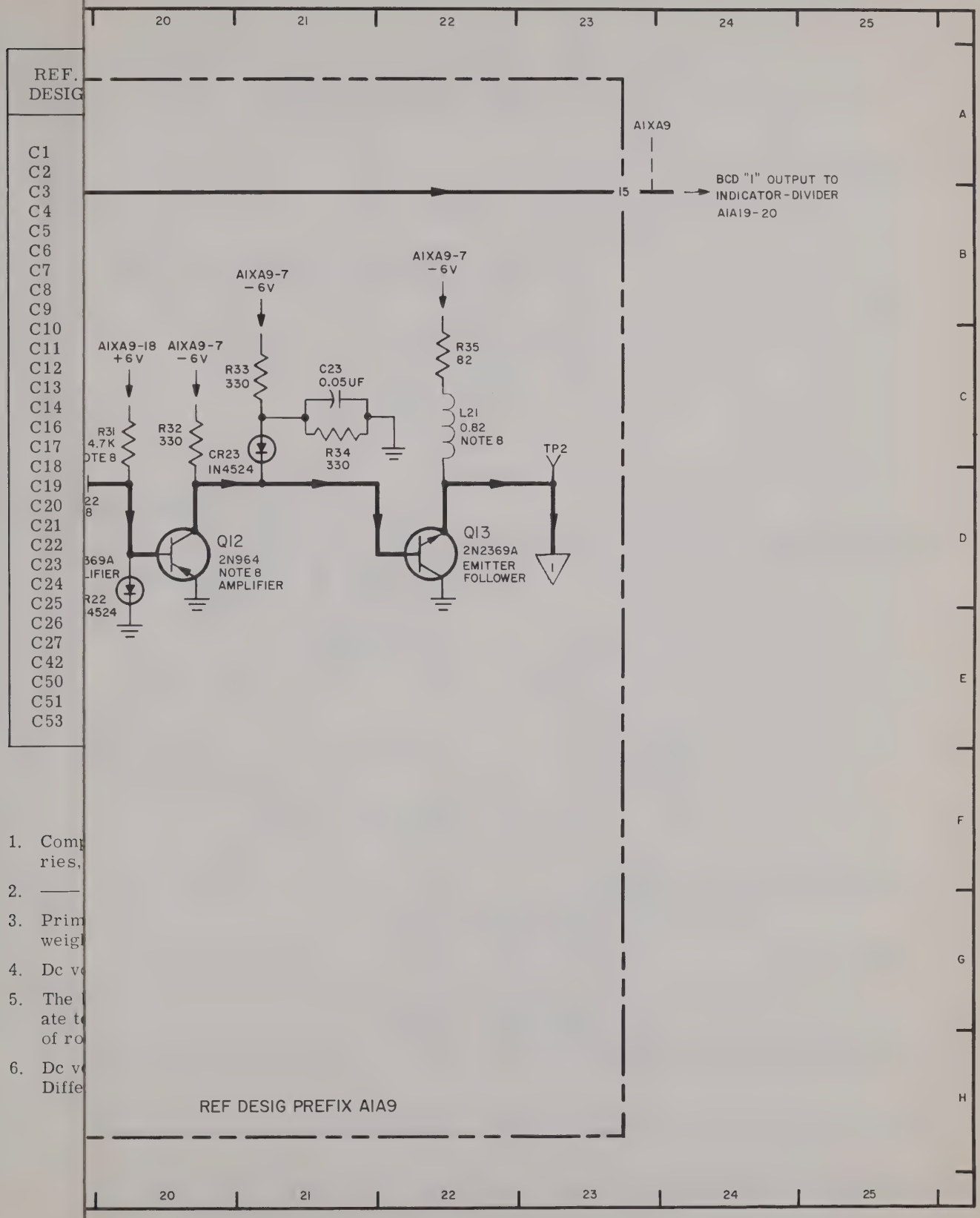

1. Comp
ries,
2. ——
3. Prim
weig
4. Dc v
5. The
ate t
of ro
6. Dc v
Diffe

Figure 5-72. Count Decades, Frequency Divider A1A9, Schematic Diagram (Sheet 1 of 2)

PARTS LOCATION INDEX

REF. DESIG.	DRAWING LOCATION	REF. DESIG.	DRAWING LOCATION	REF. DESIG.	DRAWING LOCATION	REF. DESIG.	DRAWING LOCATION
C1	3B	C54	4C	L4	12C	R13	9E
C2	4E	C55	4C	L5	14C	R14	13G
C3	5F	C56	4G	L6	15C	R15	10F
C4	7D	CR1	6E	L7	15E	R16	10E
C5	8D	CR2	6E	L21	22C	R17	11E
C6	8F	CR3	6D	Q1	4D	R18	12C
C7	3B	CR4	7E	Q2	5D	R19	11C
C8	10D	CR5	8C	Q3	7E	R20	13F
C9	16G	CR6	8E	Q4	7D	R21	12F
C10	11E	CR7	9F	Q5	9D	R22	13D
C11	15E	CR8	8C	Q6	12E	R23	14D
C12	13H	CR9	10F	Q7	12D	R24	14F
C13	12F	CR10	11F	Q8	14D	R25	14C
C14	15F	CR11	11D	Q9	15E	R26	16F
C16	17D	CR12	12D	Q10	17D	R27	16F
C17	4B	CR13	13D	Q11	19D	R28	18F
C18	18F	CR14	10G	Q12	20D	R29	18E
C19	3G	CR15	10G	Q13	22D	R30	19F
C20	4B	CR16	14D	R1	4E	R31	20C
C21	5B	CR17	14D	R2	5D	R32	20C
C22	19D	CR18	15D	R3	5D	R33	21C
C23	21C	CR19	16F	R4	6E	R34	21C
C24	5B	CR20	17E	R5	5F	R35	22C
C25	6B	CR21	19D	R6	5F	R82	15E
C26	4G	CR22	20D	R7	7E	R83	19C
C27	4G	CR23	21D	R8	6C	TP2	23C
C42	3C	CR64	5E	R9	9E	TP3	3D
C50	3G	L1	5C	R10	6E	TP4	6D
C51	4G	L2	8C	R11	6E	TP5	10D
C53	6B	L3	11E	R12	9C		

NOTES

1. Component values expressed in ohms, microhenries, and picrofarads unless otherwise noted.
2. ——— -- ——— indicates assembly boundaries.
3. Primary signal paths weighted. Feedback paths weighted and dashed.
4. Dc voltages are preceded by "+" or "-"
5. The letters CW, placed adjacent to the appropriate terminals of A1A9R11, indicate the direction of rotation viewed from the shaft end.
6. Dc voltages are measured with a CCUH-801 Dc Differential Voltmeter.
7. Parts location information is given in map-type coordinates in accompanying table.
8. On A1A9 with part No. MP90-565 marked "L5":
   a. R31 is 680 ohms, and upper end is connected to ground.
   b. Q12 is 2N2894.
   c. Q2 is 2N709.
   d. L2 is 0.33 microhenries.
   e. L21 is not included and replaced by a jumper.
   f. CR64 is not included and replaced with open circuit.
   g. R2 is 1.8 k.
   h. R6 is 510 ohms.

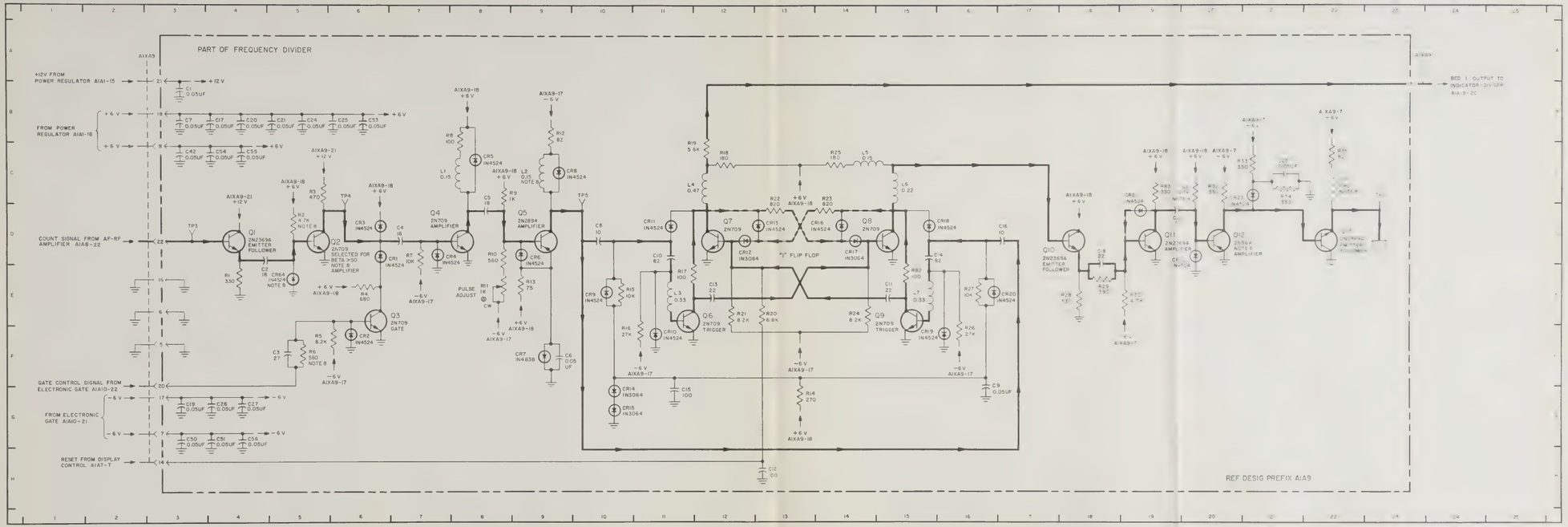

Figure 5-72. Count Decades, Frequency Divider A1A9, Schematic Diagram (Sheet 1 of 2)

PARTS LOCATION INDEX

REF. DESIG.	DRAWING LOCATION
C1	3B
C2	4E
C3	5F
C4	7D
C5	8D
C6	9F
C7	3B
C8	10D
C9	16G
C10	11E
C11	15E
C12	13H
C13	12E
C14	15E
C16	17D
C17	4B
C18	18E
C19	3G
C20	4B
C21	5B
C22	19D
C23	21C
C24	5B
C25	6B
C26	4G
C27	4G
C42	3C
C50	3G
C51	4G
C53	6B

REF. DESIG.	DRAWING LOCATION
C54	4C
C55	4C
C56	4G
CR1	6E
CR2	6E
CR3	6D
CR4	7E
CR5	8C
CR6	9E
CR7	9E
CR8	9C
CR9	10E
CR10	11F
CR11	11D
CR12	12D
CR13	13D
CR14	10G
CR15	10G
CR16	14D
CR17	14D
CR18	15D
CR19	16F
CR20	17E
CR21	19D
CR22	20D
CR23	21D
CR64	5E
L1	8C
L2	9C
L3	11E

REF. DESIG.	DRAWING LOCATION
L4	12C
L5	14C
L6	15C
L7	15E
L21	22C
Q1	4D
Q2	5D
Q3	7E
Q4	7D
Q5	9D
Q6	12E
Q7	12D
Q8	14D
Q9	15E
Q10	17D
Q11	19D
Q12	20D
Q13	22D
R1	4E
R2	5D
R3	5D
R4	6E
R5	5F
R6	5F
R7	7E
R8	8C
R9	9E
R10	8E
R11	8E
R12	9C

REF. DESIG.	DRAWING LOCATION
R13	9E
R14	13G
R15	10E
R16	10E
R17	11E
R18	12C
R19	11C
R20	13F
R21	12F
R22	13D
R23	14D
R24	14F
R25	14C
R26	16F
R27	16E
R28	18E
R29	18E
R30	19E
R31	20C
R32	20C
R33	21C
R34	21C
R35	22C
R82	15E
R83	19C
TP2	23C
TP3	3D
TP4	6D
TP5	10D

NOTES

1. Component values expressed in ohms, microhenries, and picrofarads unless otherwise noted.
2. —— -- —— indicates assembly boundaries.
3. Primary signal paths weighted. Feedback paths weighted and dashed.
4. Dc voltages are preceded by "+" or "-".
5. The letters CW, placed adjacent to the appropriate terminals of A1A9R11, indicate the direction of rotation viewed from the shaft end.
6. Dc voltages are measured with a CCUH-801 Dc Differential Voltmeter.
7. Parts location information is given in map-type coordinates in accompanying table.
8. On A1A9 with part No. MP90-565 marked "L5":
   a. R31 is 680 ohms, and upper end is connected to ground.
   b. Q12 is 2N2894.
   c. Q2 is 2N709.
   d. L2 is 0.33 microhenries.
   e. L21 is not included and replaced by a jumper.
   f. CR64 is not included and replaced with open circuit.
   g. R2 is 1.8 k.
   h. R6 is 510 ohms.

Figure 5-72. Count Decades, Frequency Divider A1A9, Schematic Diagram (Sheet 1 of 2)

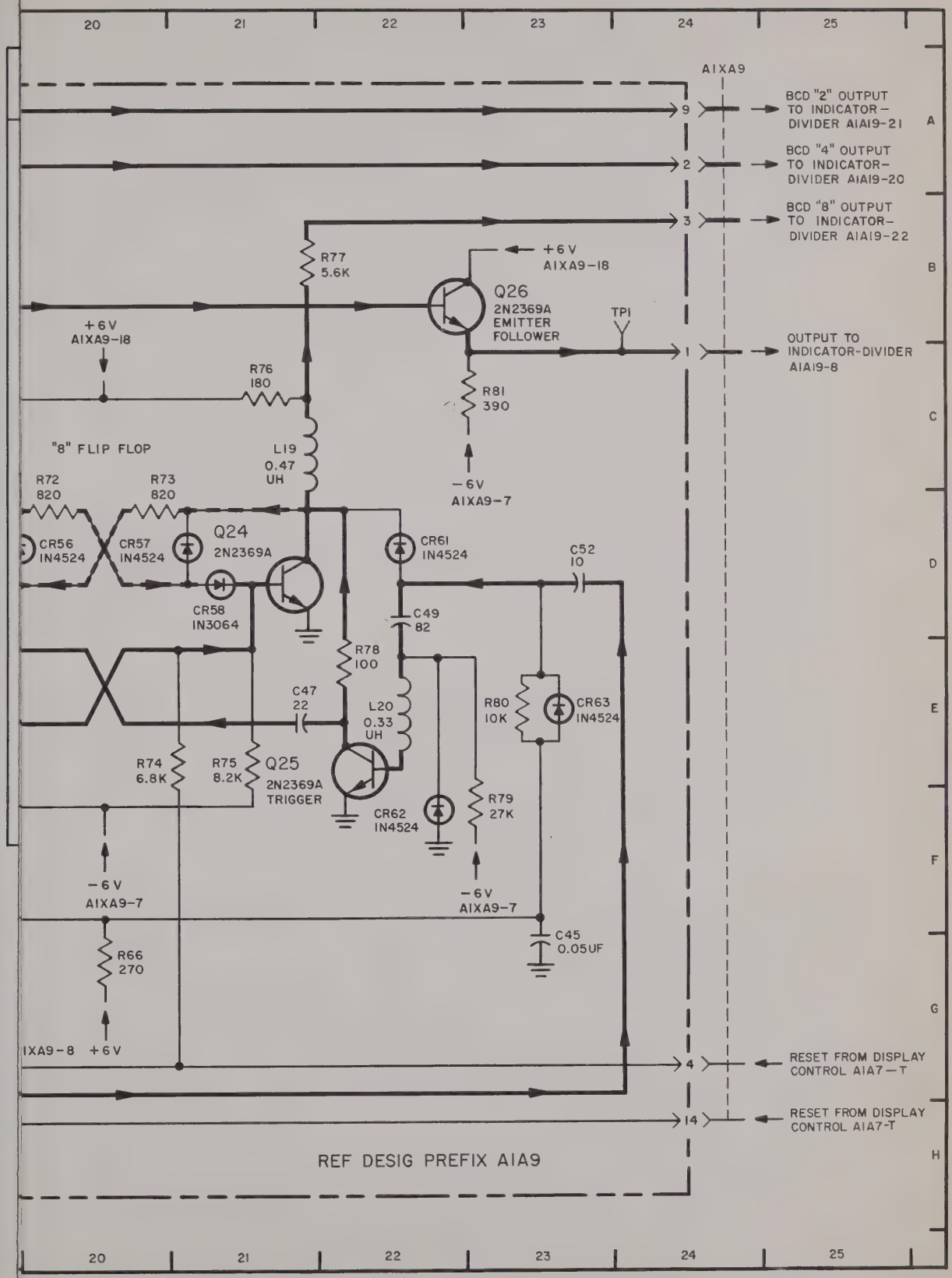

Figure 5-72. Count Decades, Frequency Divider A1A9, Schematic Diagram (Sheet 2 of 2)

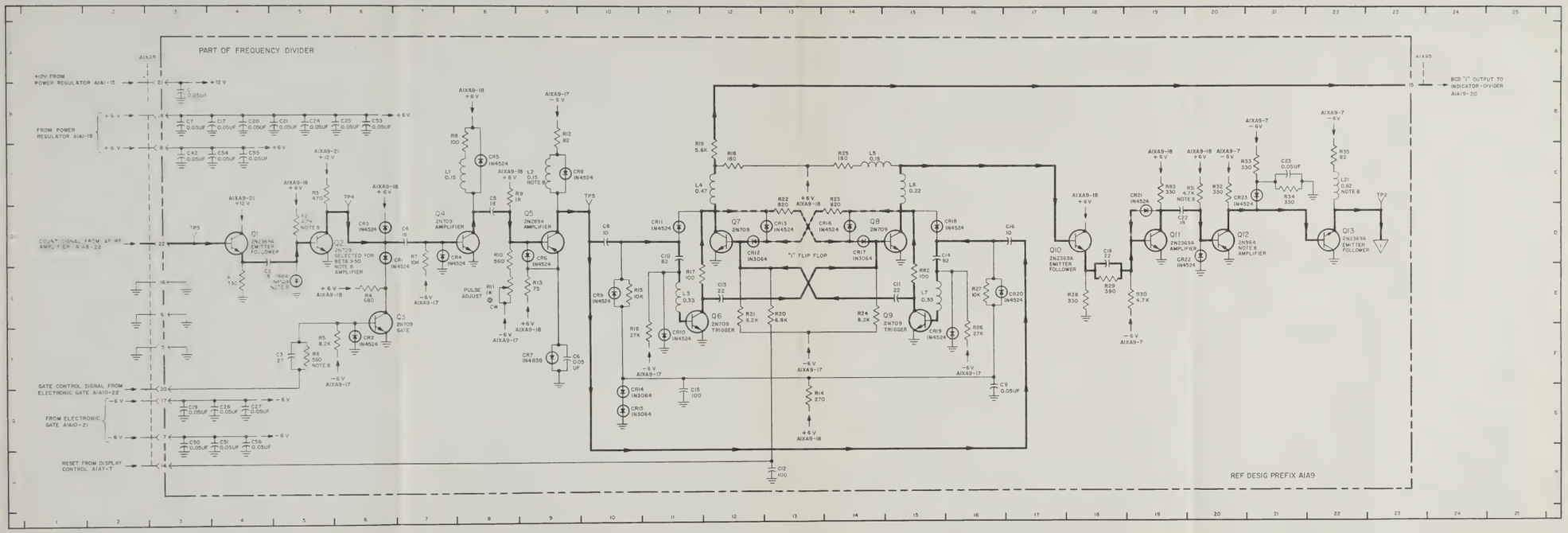

PARTS LOCATION INDEX

REF. DESIG.	DRAWING LOCATION	REF. DESIG.	DRAWING LOCATION	REF. DESIG.	DRAWING LOCATION	REF. DESIG.	DRAWING LOCATION
C1	3B	C54	4C	L4	12C	R13	9I
C2	4E	C55	4C	L5	14C	R14	13G
C3	5F	C56	4G	L6	15C	R15	10E
C4	7D	CR1	6E	L7	15E	R16	10E
C5	8D	CR2	6E	L21	22C	R17	11E
C6	9F	CR3	6D	Q1	4D	R18	12C
C7	3B	CR4	7E	Q2	5D	R19	11C
C8	10D	CR5	8C	Q3	7E	R20	13F
C9	16G	CR6	9E	Q4	7D	R21	12F
C10	11E	CR7	9E	Q5	9D	R22	13D
C11	15E	CR8	9C	Q6	12E	R23	14D
C12	13H	CR9	10E	Q7	12D	R24	14F
C13	12E	CR10	11F	Q8	14D	R25	14C
C14	15E	CR11	11D	Q9	15E	R26	16F
C16	17D	CR12	12D	Q10	17D	R27	16E
C17	4B	CR13	13D	Q11	19D	R28	18F
C18	18E	CR14	10G	Q12	20D	R29	18F
C19	3G	[illegible]	[illegible]	[illegible]	[illegible]	[illegible]	[illegible]
C20	4B	[illegible]	[illegible]	[illegible]	[illegible]	[illegible]	[illegible]
C21	5B	CR17	14D	R2	5D	R32	20C
C22	[illegible]	[illegible]	[illegible]	[illegible]	[illegible]	[illegible]	[illegible]
C23	21C	[illegible]	[illegible]	[illegible]	[illegible]	[illegible]	[illegible]
C24	[illegible]	[illegible]	[illegible]	[illegible]	[illegible]	[illegible]	[illegible]
C25	6B	CR21	19D	R6	5F	R82	15I
C26	4G	CR22	20D	R7	7E	R83	19C
C27	4G	CR23	21D	R8	8C	TP2	23C
C42	3C	CR64	5E	R9	9E	TP3	3D
C50	3G	L1	8C	R10	8E	TP4	6D
C51	4G	L2	9C	R11	8E	TP5	10D
C53	6B	L3	11E	R12	9C		

NOTES

1. Component values expressed in ohms, microhenries, and picrofarads unless otherwise noted.
2. —— - - —— indicates assembly boundaries.
3. Primary signal paths weighted. Feedback paths weighted and dashed.
4. Dc voltages are preceded by "+" or "-".
5. The letters CW, placed adjacent to the appropriate terminals of A1A9R11, indicate the direction of rotation viewed from the shaft end.
6. Dc voltages are measured with a CCUH-801 Dc Differential Voltmeter.
7. Parts location information is given in map-type coordinates in accompanying table
8. On A1A9 with part No. MP90-565 marked "L5
   a. R31 is 680 ohms, and upper end is connected to ground.
   b. Q12 is 2N[illegible]
   c. Q2 is [illegible]
   d. L2 is 0.33 microhenries.
   e. L21 is not included and replaced by a jumper
   f. CR64 is not included and replaced with open circuit.
   g. R2 is 1.8 k[illegible]
   h. R6 is 510 o[illegible]

Figure 5-72. Count Decades, Frequency Divider A1A9, Schematic Diagram (Sheet 1 of 2)

PARTS LOCATION INDEX

REF. DESIG.	DRAWING LOCATION
C28	3D
C29	9G
C30	4D
C31	7E
C32	5E
C33	8D
C34	12E
C35	9D
C36	10D
C37	16G
C38	11E
C39	14E
C40	12E
C41	15D
C42	16D
C43	17D
C44	17D
C45	23G
C46	18D
C47	21E
C48	19E
C49	22D
C52	23D
CR24	3D
CR25	3E
CR26	4E
CR27	4D
CR28	5D
CR29	6D
CR30	6D
CR30	7D
CR34	8D
CR35	8F
CR36	9E

REF. DESIG.	DRAWING LOCATION
CR37	10D
CR38	10E
CR39	11F
CR40	11D
CR41	12D
CR42	12D
CR43	13D
CR44	14D
CR47	15D
CR48	15F
CR49	16E
CR50	15D
CR51	18D
CR52	17E
CR53	17D
CR54	18F
CR55	19D
CR56	19D
CR57	20D
CR58	21D
CR61	22D
CR62	22F
CR63	23F
L9	4E
L10	5C
L11	7C
L12	8E
L13	11E
L14	12C
L15	14C
L16	15E
L17	18E
L18	19C

REF. DESIG.	DRAWING LOCATION
L19	21C
L20	22F
Q14	5E
Q15	5D
Q16	7D
Q17	8E
Q18	12E
Q19	12D
Q20	14D
Q21	14E
Q22	19E
Q23	19D
Q24	21D
Q25	21E
R36	23B
R37	3E
R38	3F
R39	4E
R40	5C
R41	5E
R42	6D
R43	6D
R44	6D
R45	7D
R46	7C
R47	8B
R48	8E
R49	9F
R50	9E
R51	10F
R52	10F
R53	11E

REF. DESIG.	DRAWING LOCATION
R54	12C
R55	14E
R56	13D
R57	13D
R58	13E
R59	12E
R60	14C
R61	14B
R62	15E
R63	16F
R64	16E
R65	13G
R66	20G
R67	17E
R68	17F
R69	18E
R70	19C
R71	19F
R72	20D
R73	20D
R74	20F
R75	21F
R76	21C
R77	22B
R78	22E
R79	22F
R80	23E
R81	23C
R84	3G
R85	10G
R86	17G
TP1	24B

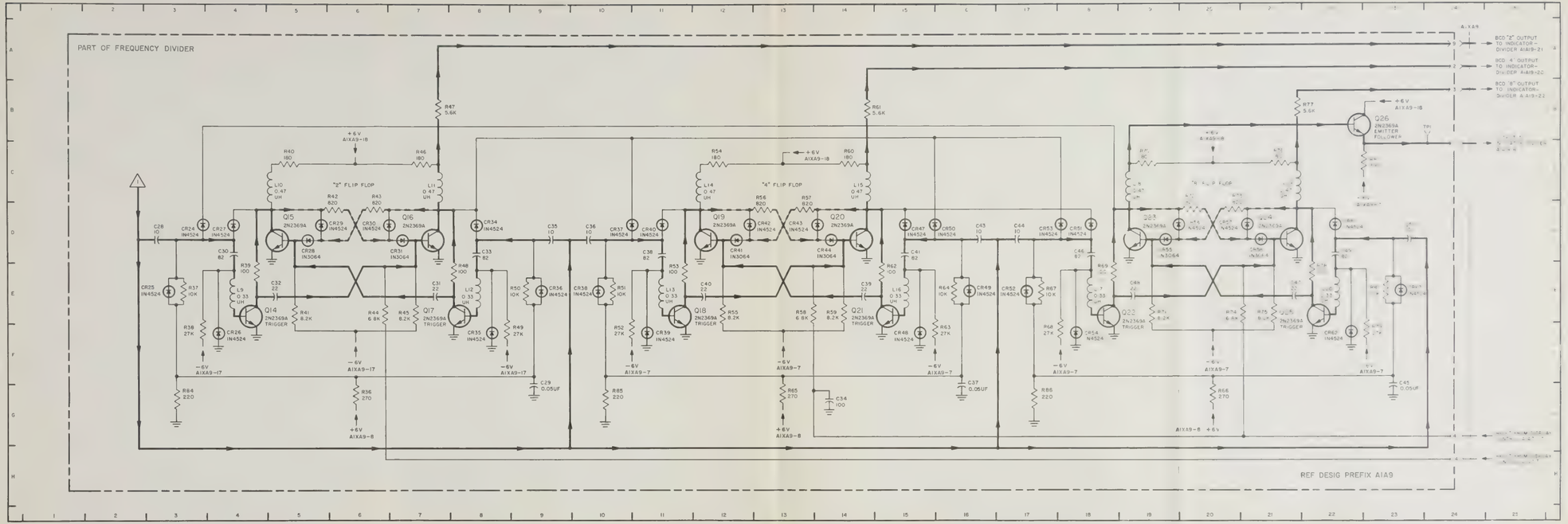

Figure 5-72. Count Decades, Frequency Divider A1A9, Schematic Diagram (Sheet 2 of 2)

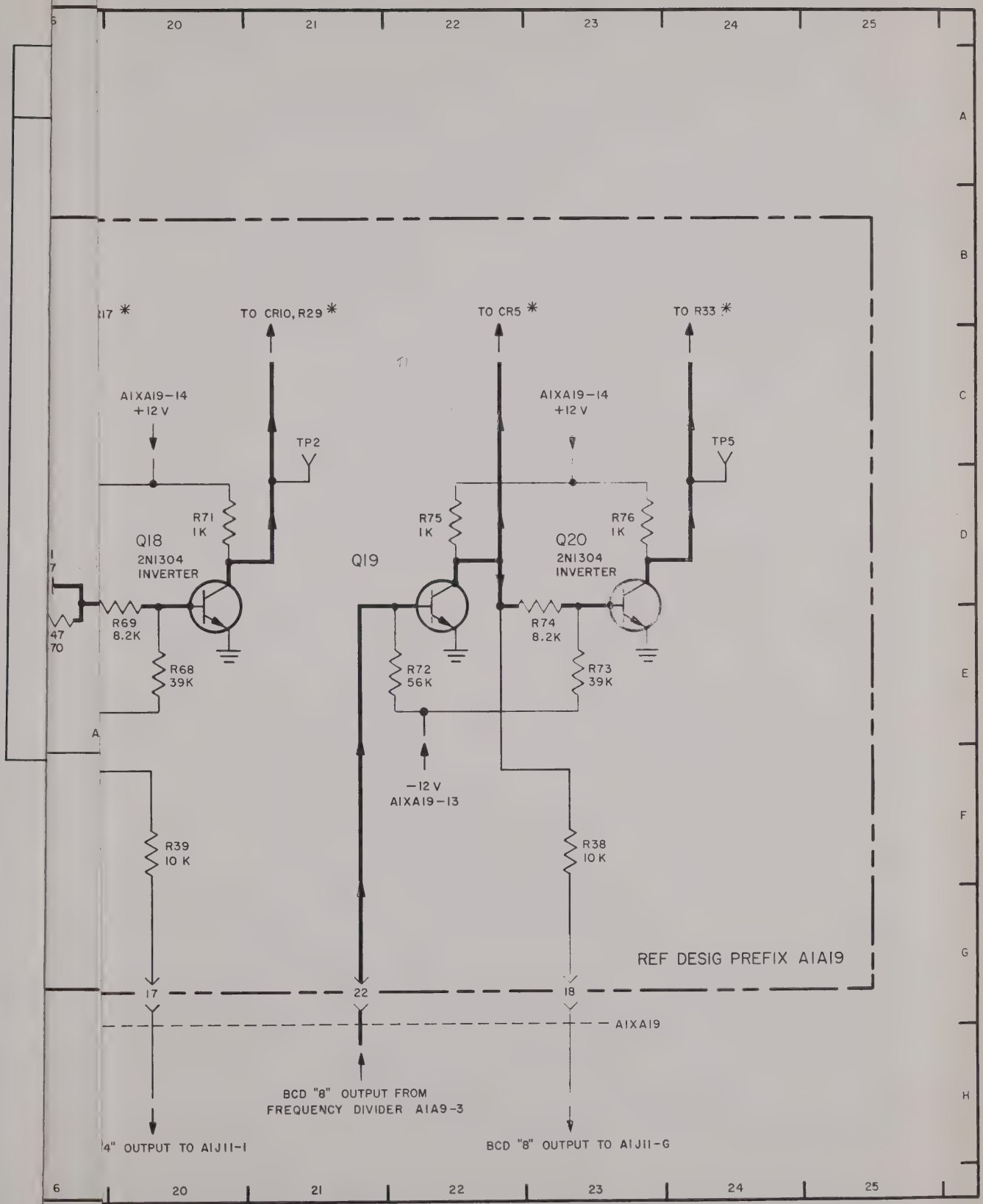

Figure 5-73. Count Decades, Inverter Circuits on A1A19, Schematic Diagram

PARTS LOCATION INDEX

REF. DESIG.	DRAWING LOCATION
C1	6D
C2	4C
C3	9D
C4	11C
C5	4C
C6	4C
CR17	8D
CR18	10E
CR19	4D
Q10	7D
Q11	7D
Q12	10D
Q13	13D
Q14	14D
Q15	15D
Q16	17D
Q17	18D
Q18	20D
Q19	21D
Q20	23D
R36	23F
R39	20F
R40	17F
R41	9E
R43	14F
R44	4D
R45	11F
R46	5E
R47	6E
R48	7E
R49	8C

REF. DESIG.	DRAWING LOCATION
R50	7D
R52	12C
R53	9E
R54	10D
R55	11E
R56	11E
R57	13E
R58	14E
R59	13D
R60	14D
R61	16E
R62	17E
R63	17E
R64	16D
R65	16D
R66	17D
R67	19E
R68	20E
R69	20E
R70	19D
R71	20D
R72	22E
R73	23E
R74	23E
R75	22D
R76	23D
TP1	9D
TP2	21C
TP3	15C
TP4	18C
TP5	24C

NOTES

1. Component values expressed in ohms and picofarads unless otherwise noted.
2. —— -- —— indicates assembly boundaries.
3. Primary signal paths weighted.
4. Dc voltages are preceded by "+" or "-".
5. Dc voltages are measured with a CCUH-801 Dc Differential Voltmeter.
6. Parts location information is given in map-type coordinates in accompanying table.

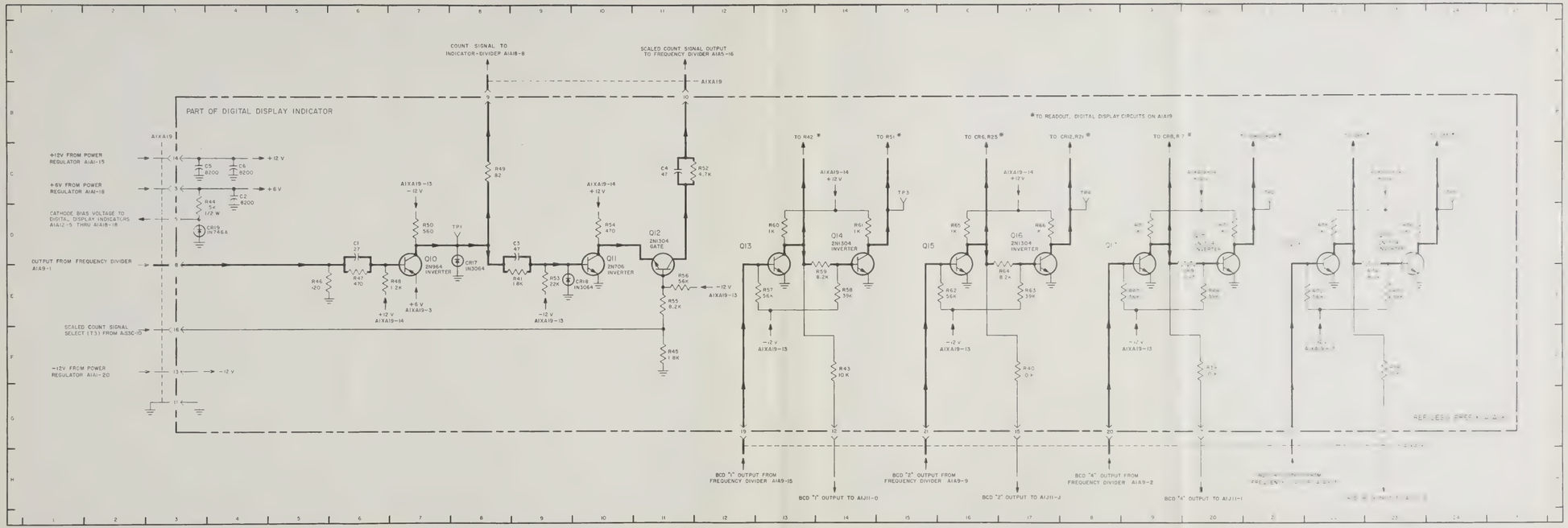

Figure 5-73. Count Decades, Inverter Circuits on A1A19, Schematic Diagram

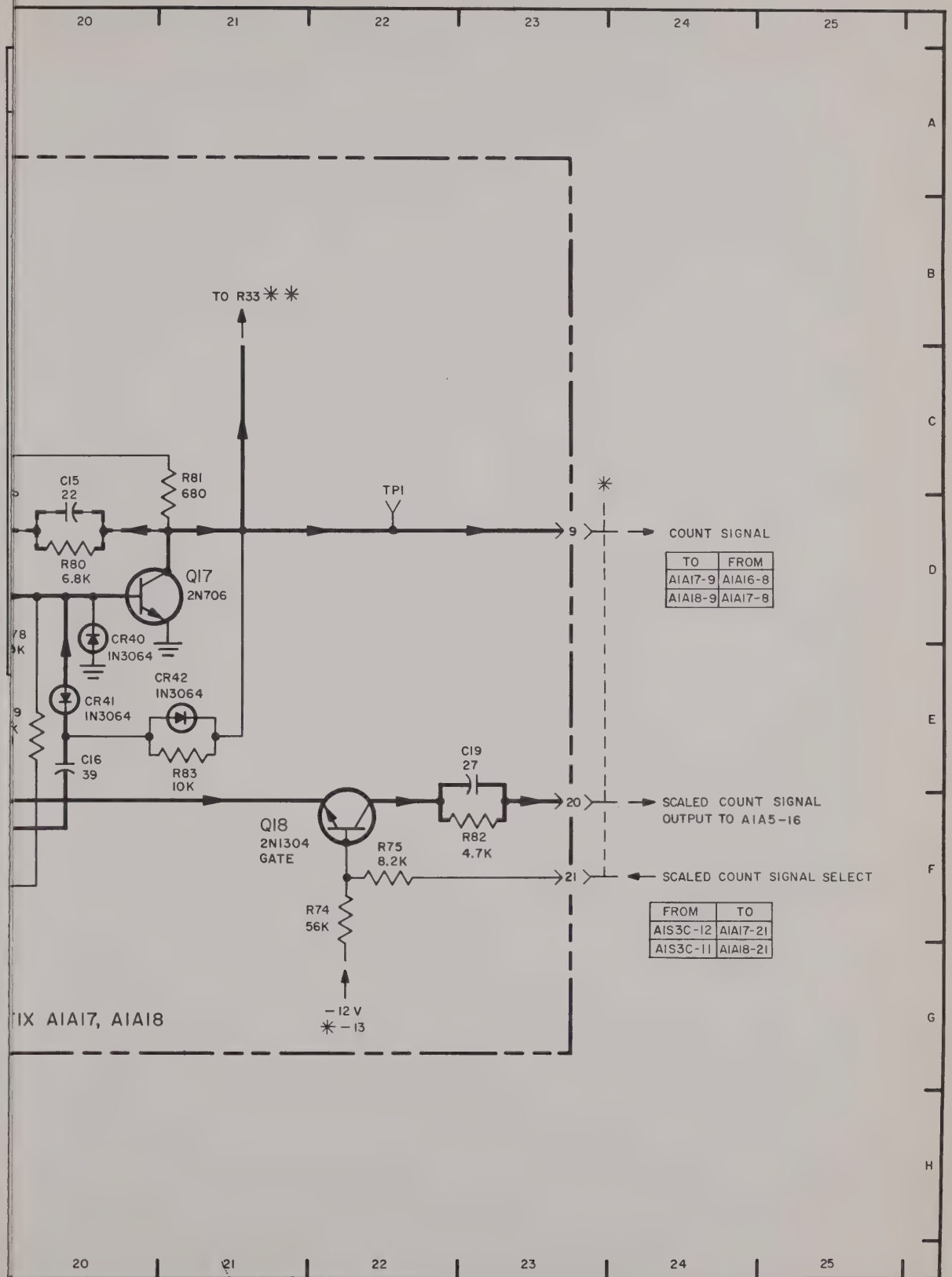

Figure 5-74. Count Decades, Frequency Divider Circuits on A1A17 and A1A18, Schematic Diagram

PARTS LOCATION INDEX

REF. DESIG.	DRAWING LOCATION	REF. DESIG.	DRAWING LOCATION	REF. DESIG.	DRAWING LOCATION	REF. DESIG.	DRAWING LOCATION
C1	5D	CR23	9F	Q15	16D	R61	12F
C2	7D	CR24	10F	Q16	18D	R62	13E
C3	7E	CR25	9E	Q17	20D	R63	13E
C4	5E	CR26	12F	Q18	22F	R64	13D
C5	10F	CR27	11E	R38	9G	R65	14D
C6	10D	CR28	10E	R39	17G	R66	15E
C7	11D	CR29	15E	R40	13G	R67	15E
C8	11E	CR30	12E	R41	4G	R68	15E
C9	14E	CR31	13E	R43	5D	R69	15D
C10	14D	CR32	14E	R44	5E	R70	16D
C11	16D	CR33	14D	R45	5D	R71	16E
C12	16E	CR34	16D	R46	6F	R72	18E
C13	18E	CR35	16E	R47	6E	R73	18D
C14	19D	CR36	16E	R48	6E	R74	22F
C15	20D	CR37	18E	R49	7D	R75	22F
C16	20E	CR38	18E	R50	8D	R76	19D
C17	3E	CR39	18D	R52	7E	R77	19E
C18	3F	CR40	20D	R53	9E	R78	19E
C19	23E	CR41	20F	R54	9D	R79	20E
CR19	5F	CR42	21E	R55	10D	R80	20D
CR16	5E	Q10	5D	R56	10E	R81	21D
CR18	5E	Q11	8D	R57	11D	R82	23F
CR20	7E	Q12	9D	R58	11E	R83	21E
CR21	7E	Q13	12D	R59	11D	TP1	22C
CR22	8E	Q14	13D	R60	12D	TP2	3E

NOTES

1. Component values expressed in ohms and picofarads unless otherwise noted.
2. ——— -- ——— indicates assembly boundaries.
3. Primary signal paths weighted. Feedback paths weighted and dashed.
4. Dc voltages are preceded by "+" or "-".
5. Dc voltages are measured with a CCUH-801 Dc Differential Voltmeter.
6. Parts location information is given in map-type coordinates in accompanying table.
7. Counter portions of assemblies A1A17 and A1A18 are identical and are represented by figure 5-74.
8. Source and destination of counter signal shown in tabular form.

*9. Connector designations as follows: A1XA17 for assembly A1A17 and A1XA18 for assembly A1A18.

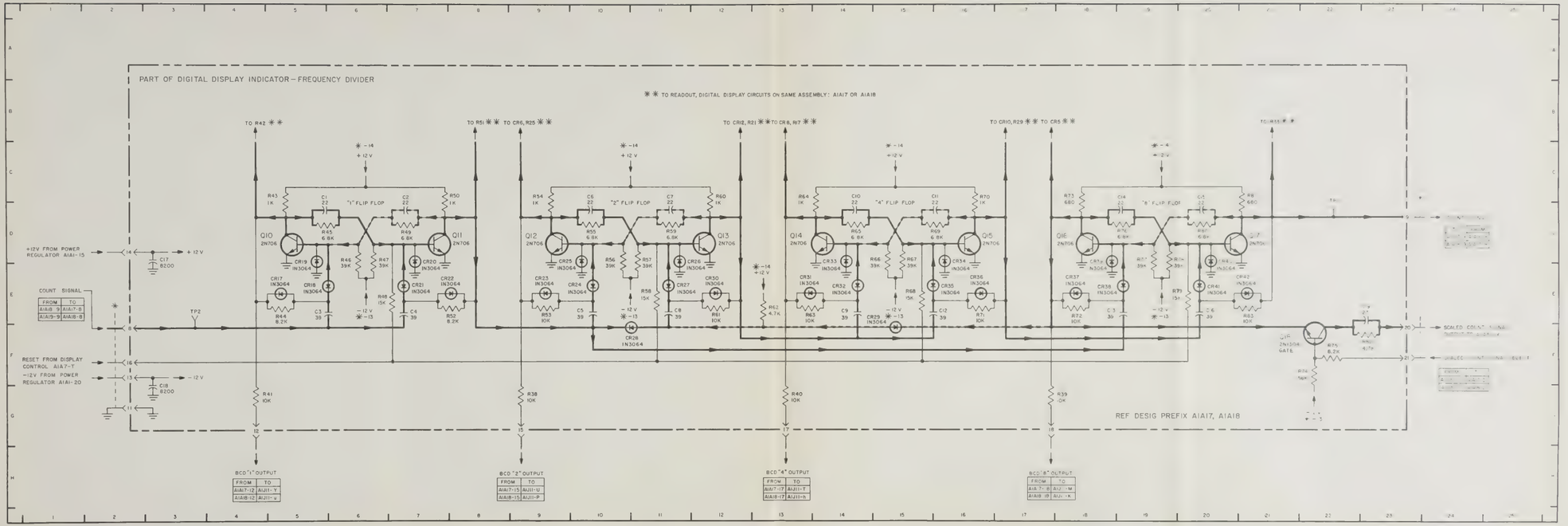

Figure 5-74. Count Decades, Frequency Divider Circuits on A1A17 and A1A18, Schematic Diagram

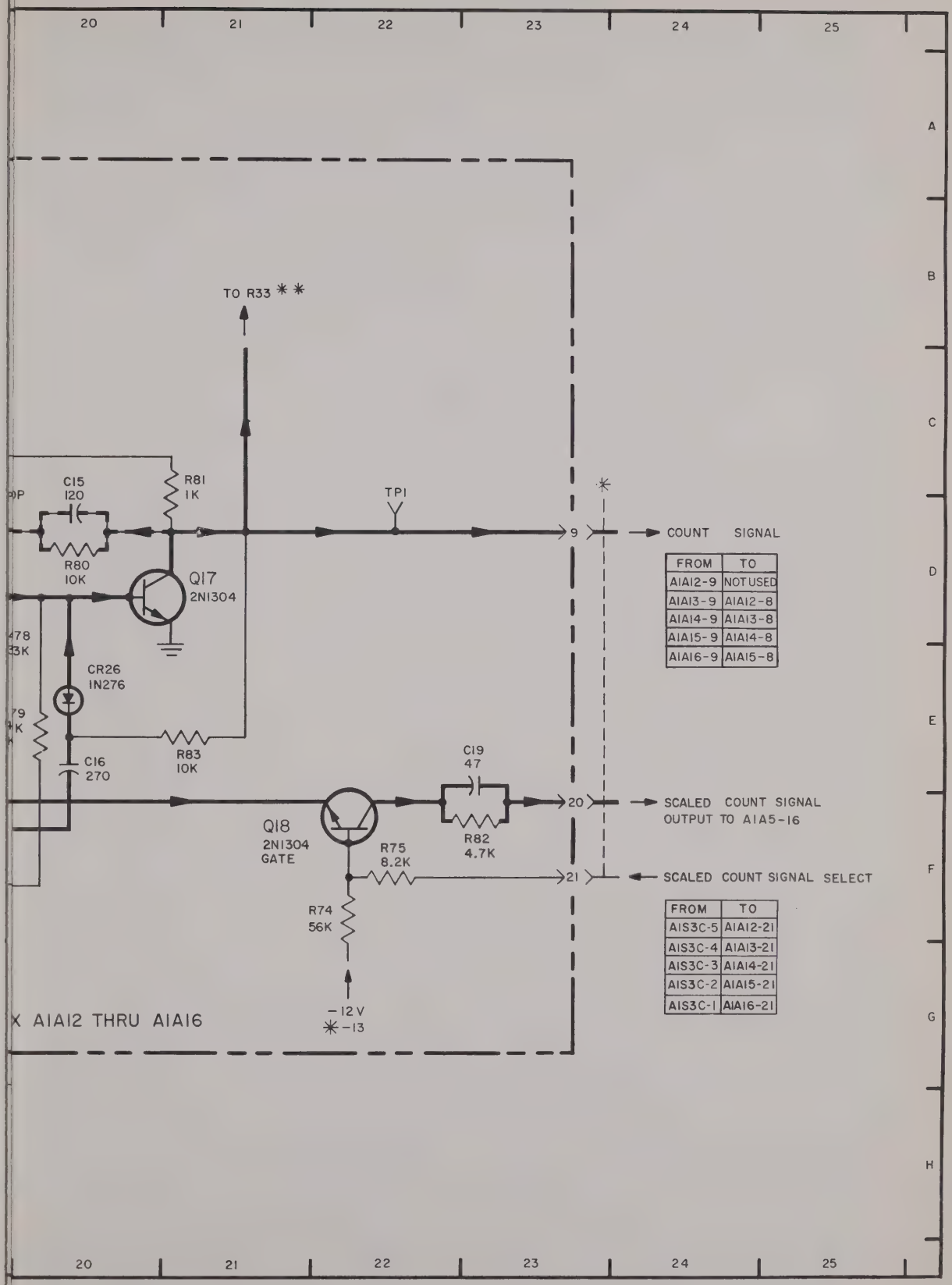

FROM	TO
A1A12-9	NOT USED
A1A13-9	A1A12-8
A1A14-9	A1A13-8
A1A15-9	A1A14-8
A1A16-9	A1A15-8

FROM	TO
A1S3C-5	A1A12-21
A1S3C-4	A1A13-21
A1S3C-3	A1A14-21
A1S3C-2	A1A15-21
A1S3C-1	A1A16-21

Figure 5-75. Count Decades, Frequency Divider Circuits on A1A12 through A1A16, Schematic Diagram

PARTS LOCATION INDEX

REF. DESIG.	DRAWING LOCATION
C1	6D
C2	7D
C3	8E
C4	7E
C5	10E
C6	10D
C7	11D
C8	11E
C9	14E
C10	14D
C11	15D
C12	15E
C13	19E
C14	19E
C15	20D
C16	20E
C17	3E
C18	3F
C19	23E
CR17	5E
CR18	7E
CR19	10E
CR20	11E
CR21	10F
CR22	15E
CR23	14E
CR24	16E
CR25	18E

REF. DESIG.	DRAWING LOCATION
CR26	20E
Q10	5D
Q11	8D
Q12	9D
Q13	12D
Q14	13D
Q15	16D
Q16	18D
Q17	20D
R35	22F
R36	9G
R39	18G
R40	13G
R41	9G
R43	5D
R44	5E
R45	6D
R46	6E
R47	6E
R48	6E
R49	7D
R50	8D
R52	7E
R53	9E
R54	9D
R55	10D
R56	10E
R57	11E

REF. DESIG.	DRAWING LOCATION
R58	11E
R59	11D
R60	12D
R61	12E
R62	13E
R63	13E
R64	14D
R65	14D
R66	15E
R67	15E
R68	15E
R69	15D
R70	16D
R71	16E
R72	18E
R73	18D
R74	22F
R75	22F
R76	19D
R77	19E
R78	19E
R79	19E
R80	20D
R81	20D
R82	23F
R83	21E
TP1	22D
TP2	3E

NOTES

1. Component values expressed in ohms and picofarads unless otherwise noted.
2. ——— -- ——— indicates assembly boundaries.
3. Primary signal paths weighted. Feedback paths weighted and dashed.
4. Dc voltages are preceded by "+" or "-".
5. Dc voltages are measured with a CCUH-801 Dc Differential Voltmeter.
6. Parts location information is given in map-type coordinates in accompanying table.
7. Counter portions of assemblies A1A12 through A1A16 are identical and are represented by figure 5-75.
8. Source and destination of counter signal shown in tabular form.

*9. Connector designations as follows: A1XA12 for A1A12, A1XA13 for A1A13, A1XA14 for A1A14, A1XA15 for A1A15, A1XA16 for A1A16.

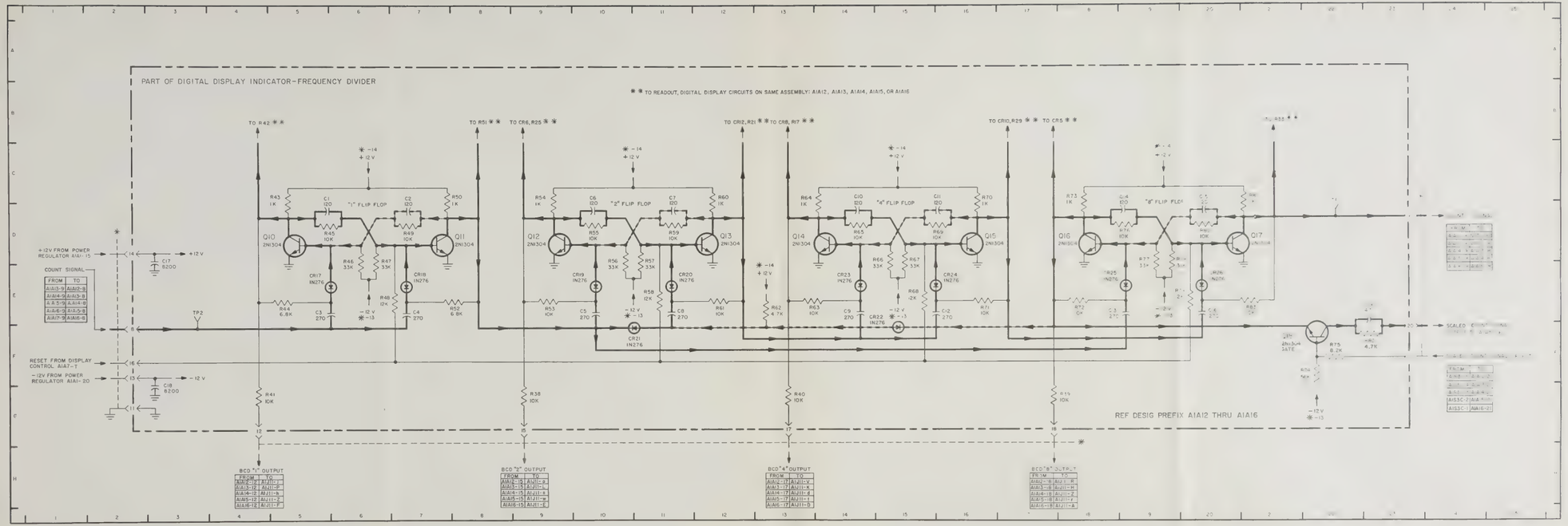

Figure 5-75. Count Decades, Frequency Divider Circuits on A1A12 through A1A16, Schematic Diagram

NOTE

1. Name of panel connector is enclosed in box.

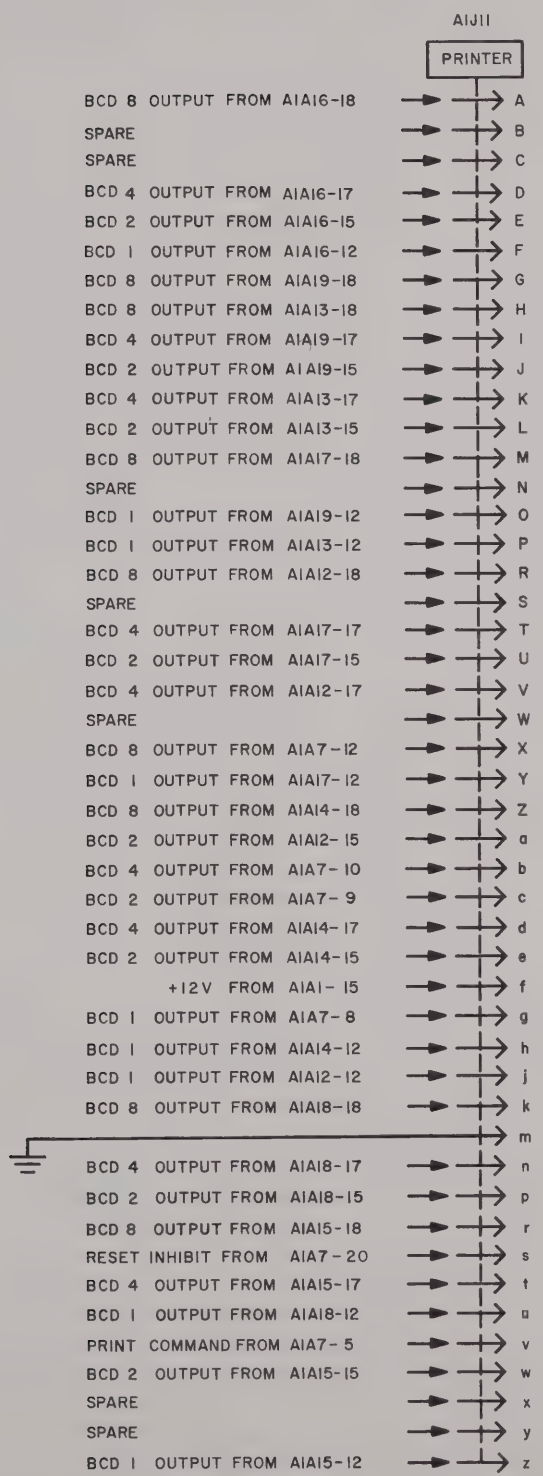

Figure 5-76. Count Decades, Printer Connector, Schematic Diagram

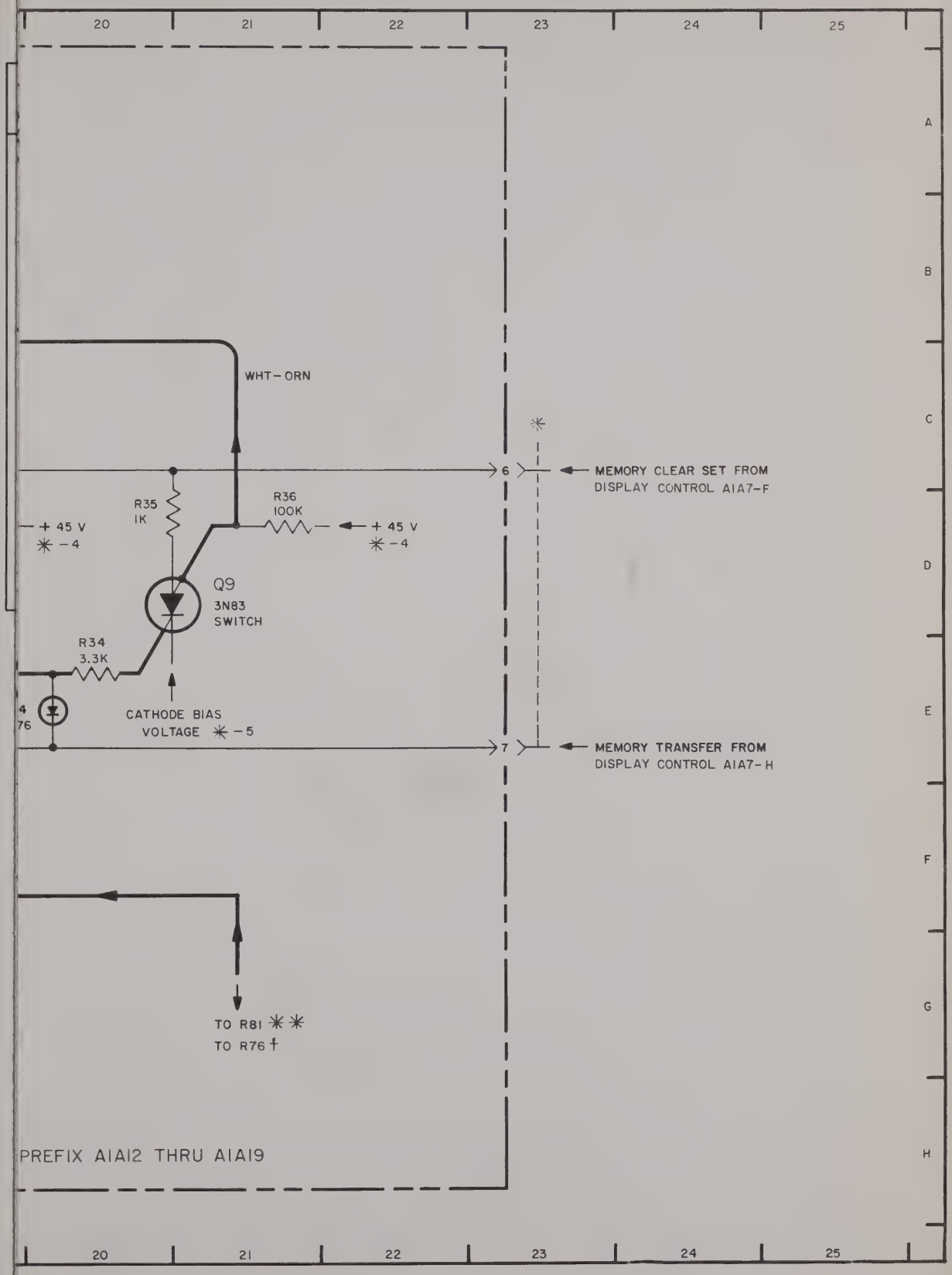

Figure 5-77. Readout, Digital Display Circuits, Schematic Diagram

PARTS LOCATION INDEX

REF. DESIG.	DRAWING LOCATION
CR1	5D
CR2	7D
CR3	5E
CR4	7E
CR5	9E
CR6	11F
CR7	10E
CR8	13F
CR9	13E
CR10	15F
CR11	15E
CR12	17F
CR13	17E
CR14	19F
CR15	16F
CR16	7F
DS1	13B
Q1	4C
Q2	8C
Q3	4E
Q4	8E

REF. DESIG.	DRAWING LOCATION
Q5	12D
Q6	14D
Q7	16D
Q8	19D
Q9	20D
R1	5B
R2	5B
R3	7B
R4	8B
R5	5C
R6	8C
R7	5D
R8	5D
R9	7D
R10	8D
R11	6D
R12	7D
R13	6E
R16	7E
R17	10F
R18	11E

REF. DESIG.	DRAWING LOCATION
R19	11D
R20	12D
R21	12F
R22	13E
R23	14D
R24	15D
R25	14F
R26	15E
R27	16D
R28	17D
R29	18F
R30	18E
R31	18D
R32	19D
R33	19F
R34	20E
R35	20D
R36	21D
R37	10D
R42	5F
R51	7F

NOTES

1. Component values expressed in ohms and picofarads unless otherwise noted.
2. —— -- —— indicates assembly boundaries.
3. Primary signal paths weighted. Feedback paths weighted and dashed.
4. Dc voltages are preceded by "+" or "-".
5. Dc voltages are measured with a CCUH-801 Dc Differential Voltmeter.
6. Parts location information is given in map-type coordinates in accompanying table.
7. Readout portion of assemblies A1A12 through A1A19 are identical and are represented by figure 5-77.
8. Connector designations as follows: A1XA12 for A1A12, A1XA13 for A1A13, A1XA14 for A1A14, A1XA15 for A1A15, A1XA16 for A1A16, A1XA17 for A1A17, A1XA18 for A1A18, and A1XA19 for A1A19.
9. ☠ Signifies dangerously high voltages exist. Keep clear! Use extreme care when measuring.

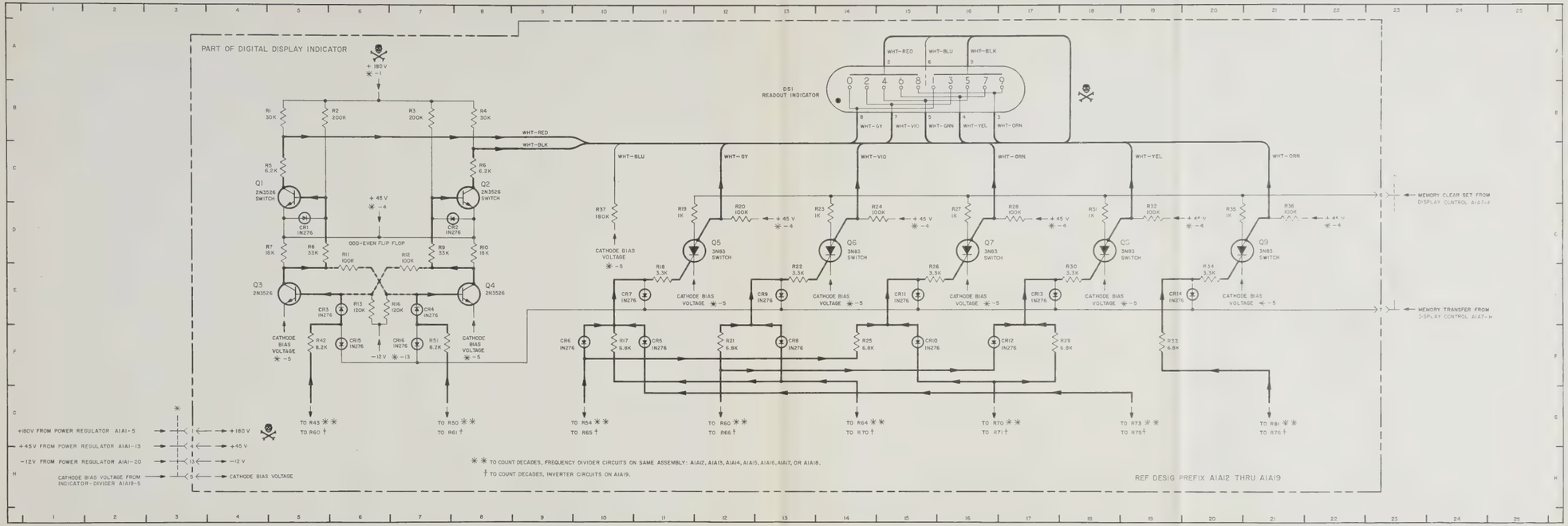

Figure 5-77. Readout, Digital Display Circuits, Schematic Diagram

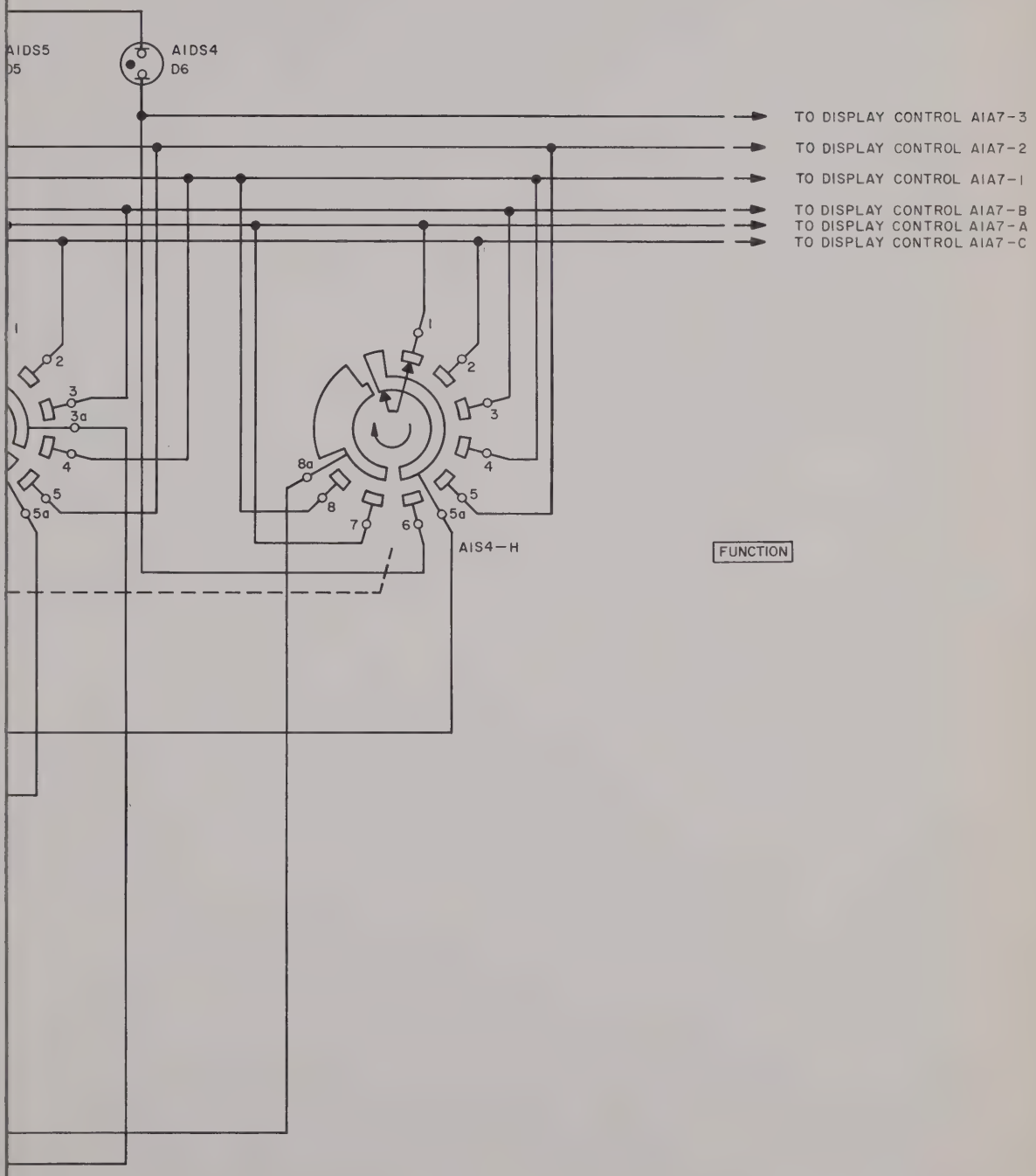

Figure 5-78. Readout, Annunciator Circuits, Schematic Diagram

NOTES

1. Component values expressed in ohms unless otherwise noted.
2. Names of panel controls and connectors are enclosed in boxes.
3. Dc voltages are preceded by "+" or "-".
4. Dc voltages are measured with the AN/USM-98 Voltmeter.
5. A1S3 shown in $\boxed{10^{-1}}$ position viewed from control knob end.
6. A1S4 shown in $\boxed{1}$ position viewed from control knob end.
7. Switch positions shown in figure 5-81.
8. Signifies dangerously high voltages exist. Keep clear! Use extreme care when measuring.

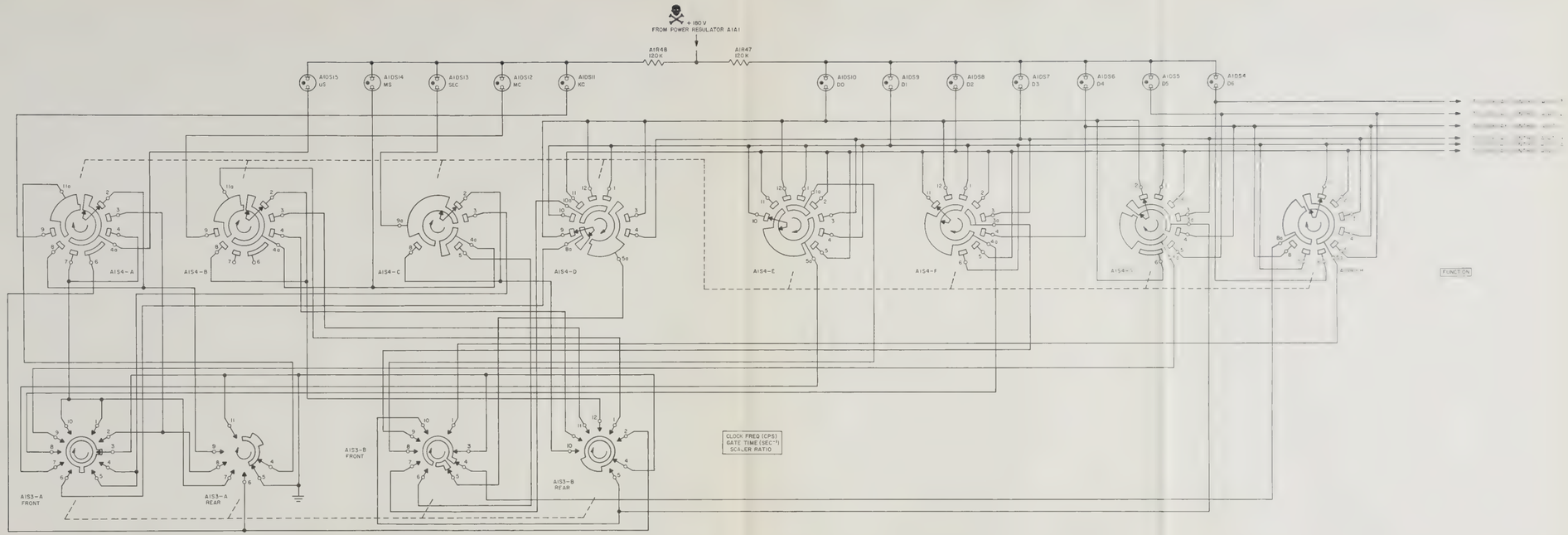

Figure 5-78. Readout, Annunciator Circuits, Schematic Diagram

NOTES

1. Component values expressed in ohms and picofarads unless otherwise noted.
2. —— -- —— indicates etched circuit boundaries.
3. Dc voltages are preceded by "+" or "-".
4. Dc voltages are measured with a CCUH-801 Dc Differential Voltmeter.

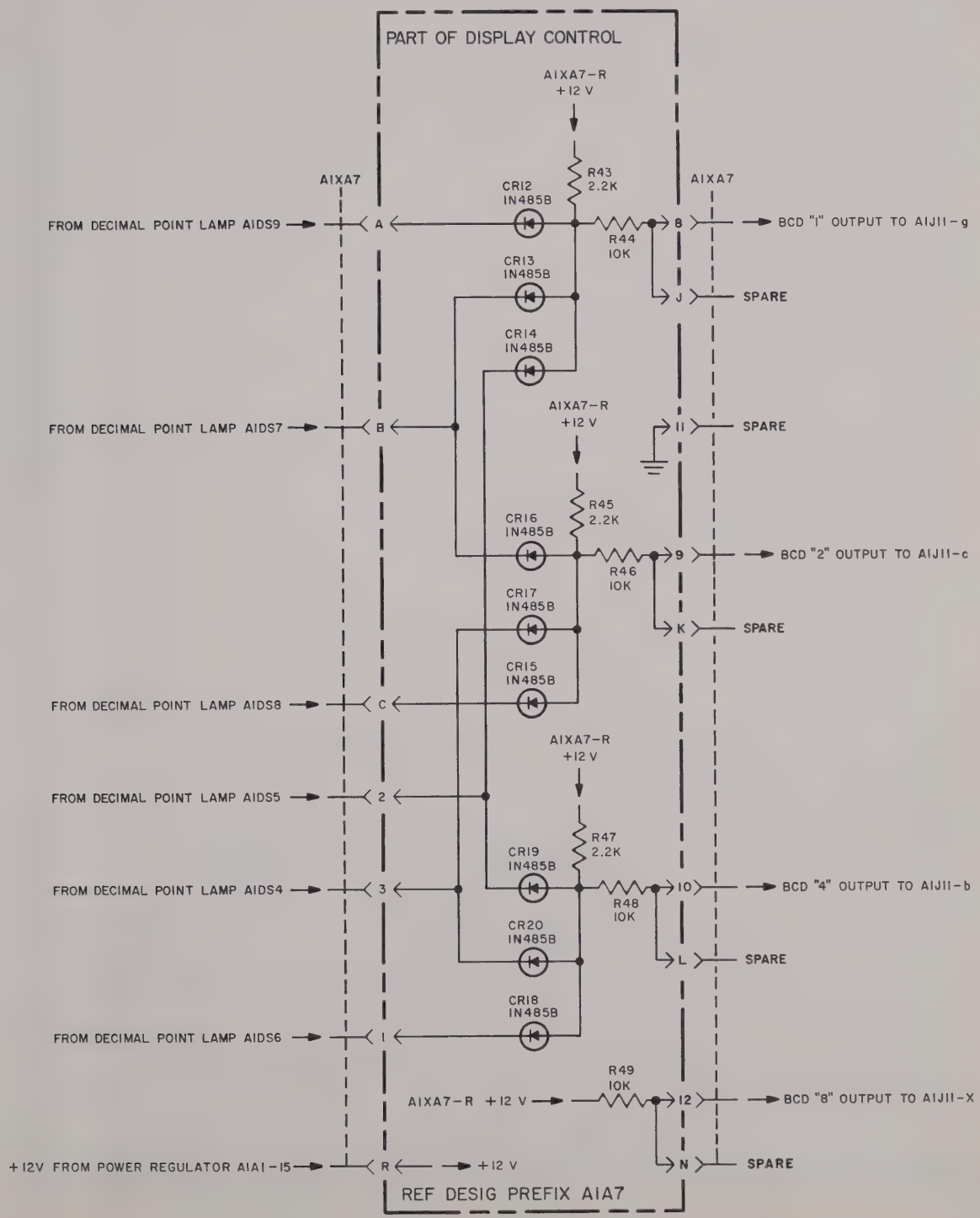

Figure 5-79. Readout, Decimal Point Decoding, Schematic Diagram

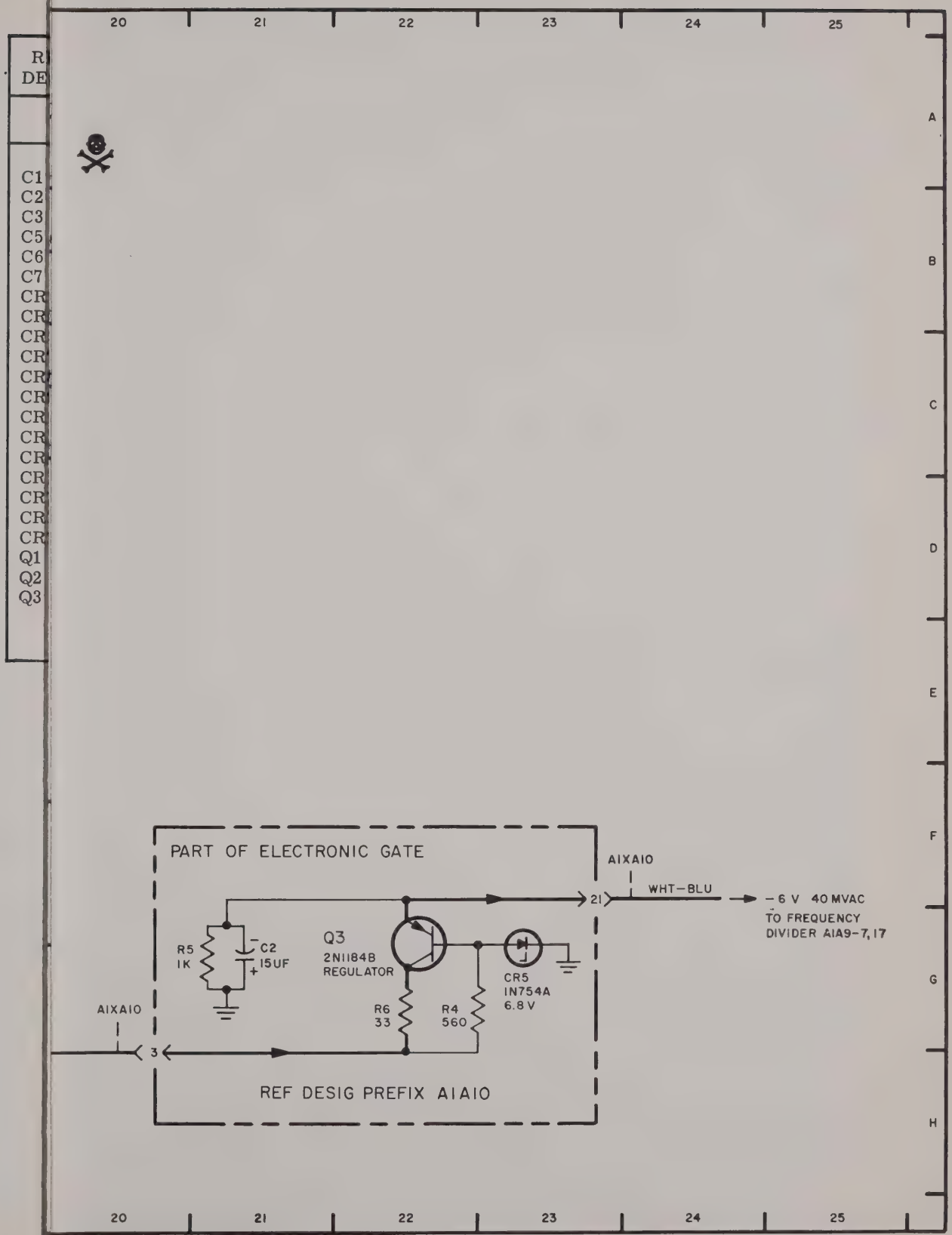

Figure 5-80. Power Supply, Schematic Diagram

PARTS LOCATION INDEX

REF. DESIG.	DRAWING LOCATION
PREFIX A1A1	
C1	12C
C2	11E
C3	13E
C5	15E
C6	14G
C7	12F
CR1	11A
CR5	11B
CR6	11B
CR7	10B
CR8	10B
CR9	11C
CR10	11C
CR11	10C
CR12	10C
CR13	12E
CR14	14E
CR15	10G
CR16	11G
Q1	9E
Q2	10E
Q3	13E
Q4	15F
Q5	16E
Q6	11G
Q7	12H
Q8	12F
R1	12A
R2	12B
R3	12B
R4	12C
R5	10E
R6	12E
R7	14D
R8	13F
R9	13F
R10	14F
R11	14F
R12	14F
R13	15G
R14	15E
R15	16E
R16	11G
R17	12G
R18	13G
R19	13G
R20	10G
R21	12F
R22	10D
TP1	11A
TP2	13B
TP3	12C
TP4	16D
TP5	17F
TP6	17H
PREFIX A1A10	
C2	21G
CR4	22G
R4	20G
R5	22G
R6	22G
Q3	21G

REF. DESIG.	DRAWING LOCATION
PREFIX A1	
B1	5D
C1	5E
C2	18A
C3	18B
C4	18C
C5	7F
C6	18F
C7	7G
C8	19H
C9	18G
CR1	7E
CR2	7G
CR3	7E
CR4	7G
F1	3D
F2	3E
FL1	1D
S1	2F
T1	5A
XA1	7A, 18A
XA10	23F

NOTES

1. Component values expressed in ohms and picofarads unless otherwise noted.
2. ——— — — ——— indicates assembly boundaries.
3. Names of panel controls and connectors are enclosed in boxes.
4. Primary signal paths weighted. Feedback paths weighted and dashed.
5. Dc voltages are preceded by "+" or "−". Ac signal and ripple voltages are followed by VAC.
6. The letters CW, placed adjacent to the appropriate terminals of A1A1R8 indicate the direction of rotation viewed from the shaft end.
7. Ac signal and ripple voltages are measured with an AN/USM-140B Oscilloscope.
8. Dc voltages are measured with a CCUH-801 Dc Differential Voltmeter.
9. Parts location information is given in map-type coordinates in accompanying table.
10. Signifies dangerously high voltages exist. Keep clear! Use extreme care when measuring.
11. Values of parts on equipment having serial No. A4 through A13, A15, A17, A18, A20, A21, A22, A24 through A28, A30, A31, A33, and A36 are as follows:

PART	VALUE OR TYPE
Q1	2N297A
R1	100 ohms
R11	422 ohms
R15	1.5 ohms
R19	1210 ohms

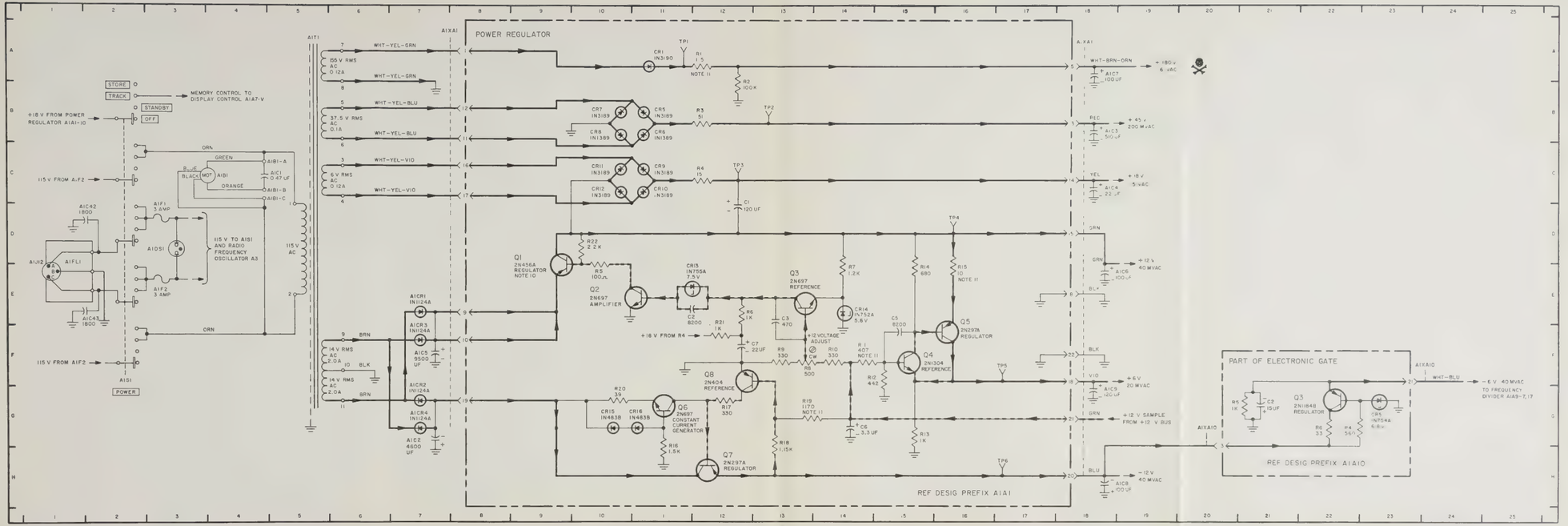

Figure 5-80. Power Supply, Schematic Diagram

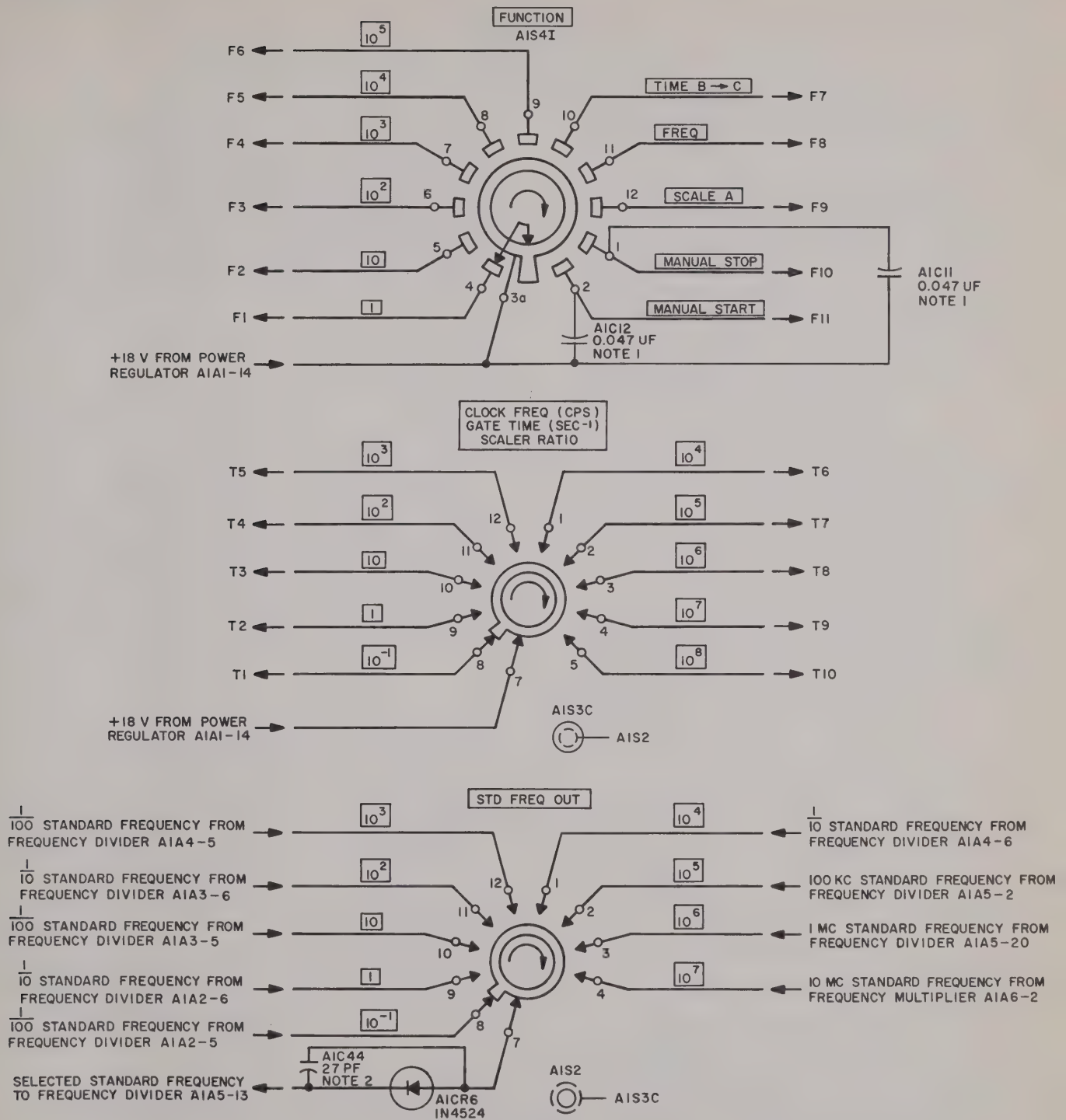

NOTES

1. Alternate value of A1C11 and A1C12 supplied is 0.05 μf. Use 0.047 μf for replacement.
2. On units with serial No. A4 through A13, A15, A17, A18, A20, A21, A22, A24 through A28, A30, A31, A33, and A36; A1CR6 and A1C44 are replaced with a jumper.
3. Names of panel controls and connectors are enclosed in boxes.
4. A1S2 shown in [10-1] position viewed from control knob end.
5. A1S3 shown in [10-1] position viewed from control knob end.
6. A1S4 shown in [1] position viewed from control knob end.

Figure 5-81. Function Switch, Wafer I; Time Base Switch, Wafer C; and Standard Frequency Output Switch, Schematic Diagram

SECTION 6

PARTS LIST

6-1. INTRODUCTION.

a. REFERENCE DESIGNATIONS.—The unit numbering method of assigning reference designations has been used to identify assemblies, subassemblies, and parts. This method has been expanded as much as necessary to adequately cover the various degrees of subdivision of the equipment. An example of this unit numbering method is illustrated by the following:

Example:

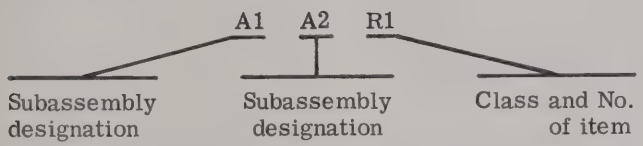

Read as: First (1) resistor (R) of second (2) subassembly (A) of first (1) subassembly (A).

b. REF. DESIG. PREFIX. — Partial reference designations are used on the illustrations. The partial reference designations consist of the class letter(s) and the identifying item number. The complete reference designations may be obtained by placing the proper prefix before the partial reference designations. Prefixes are provided on illustrations following the notation "REF. DESIG. PREFIX."

6-2. MAINTENANCE PART LIST.

Table 6-1 lists all maintenance parts. The units are listed in numerical sequence. Maintenance parts for each unit are listed alphabetically-numerically by class of part. Table 6-1 provides the following information: (1) the complete reference designation of each assembly, subassembly, or part; (2) noun name and brief description; and (3) identification of the illustration which pictorially locates the part.

Printed-circuit boards, assembly boards, modules, etc., are listed first as individual items in the maintenance parts list. The individual circuit board, assembly board, module, etc., is then broken down by components into separate parts listings. When there is a redundancy of such electronic assemblies in subsequent units, reference is made to the parts breakdown previously listed.

Note

Two part numbers are marked on each printed-circuit board that has parts mounted on it: the part number of the entire assembly and the drawing number that indicates the etched circuit. Examples of the markings are as follows:

(1) MP90-563 (assembly part number).
(2) MP90-263C (etched circuit).

The third applicable digit is always "5" for the part number, and "2" for the etched-circuit number. The etched-circuit number has no maintenance significance. All other digits before the final letter are the same for both numbers. The final letter on the etched-circuit number is subject to change in alphabetical sequence when the etched-circuit design changes.

An additional marking of the letter L or word LOT followed by a number appears on each board. This number is changed in numerical sequence when design changes are incorporated at the factory. Different L or LOT numbers or final letters on the etched markings do not affect board interchangeability as long as the remainder of the part number of the entire assembly is unchanged. In this manual the letter L suffixed to a part number is equivalent to the word LOT.

6-3. LIST OF MANUFACTURERS.

Table 6-2 lists the manufacturers of parts used in the equipment. The table includes the manufacturer's code used in table 6-1 to identify the manufacturers.

6-4. STOCK NUMBER IDENTIFICATION.

Allowance Parts Lists (APL) issued by the Electronics Supply Office (ESO) include Federal Stock Numbers and Source Maintenance and Recoverability Codes. Therefore, reference should be made to the APL prepared for the equipment for stock numbering information.

6-5. NOTES.

The following notes provide information as referenced in tables 6-1A and 6-1.

1. Supplied in units with serial No. A1 through A191.
2. Supplied in units with serial No. A192 and up.
3. Supplied in units with serial No. A210 and up.
4. Supplied in units with serial No. A250 and up.
5. Preferred replacement for MP13-523L4.
6. Supplied in units with serial No. A1 through A249.
7. Supplied in units with serial No. A264 and up. Preferred replacement for RC07GF474J.
8. Deleted.
9. Deleted.
10. Supplied in units with serial No. A351 and up.
11. Supplied in units with serial No. A1 through A350.
12. Supplied in units with serial No. A1, A2, A3, A14, A16, A19, A23, A29, A32, A34, A35, A37 and up except where a higher serial number is referenced to the identical reference designator on another line.

13. Supplied in units with serial No. A4 through A13, A15, A17, A18, A20, A21, A22, A24 through A28, A30, A31, A33, and A36.

14. Use SAN, P/N WM14BX473J for replacement.

15. Supplied in units with serial No. A1, A2, A3, A14, A16, A19, A23, A29, A32, A34, A35, and A37 to A350.

16. Use MIL type CK16AX473K for replacement.

17. Use this part for all units when reference is made to this designator in table 6-1 with a "Same as . . . " notation.

18. Supplied in converters with serial No. A1, A2, A3, A14, A16, A19, A23, A29, A32, A34, A35, and A37 through A167.

19. Supplied in converters with serial No. A168 and up.

Note

Transistors with CMC part numbers may be identified on the transistor with the last 3 digits of the part number. For example, transistor MP4906072 may be identified "-072."

TABLE 6-1A. SUPPLEMENTARY PARTS LIST

Note

The parts list has been corrected by means of the following supplementary table. For any given item or when reference is made to any designator in table 6-1 or table 6-1A, always refer first to the supplementary table, since it completely supersedes any corresponding listing in the basic table 6-1. If no information is shown for a given item, refer to the basic table 6-1 for the required information.

REF DESIG	NOTES	NAME AND DESCRIPTION	FIG. NO.
A1A1	13	REGULATOR, VOLTAGE: Printed-circuit board w/all components assembled for operation; mfr CMC, dwg MP22-524L6.	5-38
A1A1	15	REGULATOR, VOLTAGE: Printed-circuit board w/all components assembled for operation; mfr CMC, dwg MP22-524L7.	5-38
A1A1	10	REGULATOR, VOLTAGE: Printed-circuit board w/all components assembled for operation; mfr CMC, dwg MP22-524L8.	5-38
A1A1E1		TERMINAL, STUD, TP1: MIL type SE12-X-C-04.	5-38
A1A1E7		Not Used.	
A1A1Q1	11	TRANSISTOR: MIL type 2N297A.	5-38
A1A1Q1	10	TRANSISTOR: MIL type 2N456A.	5-38
A1A1Q5		TRANSISTOR: MIL type 2N297A.	5-38
A1A1Q7		TRANSISTOR: MIL type 2N297A.	5-38
A1A1R1	13,17	RESISTOR: MIL type RL42AD101J.	5-38
A1A1R1	12	RESISTOR: MIL type RW69V1R5.	5-38
A1A1R5		RESISTOR: MIL type RL42AD101J.	5-38
A1A1R8		RESISTOR: MIL type RT22C2P501.	5-38
A1A1R11	13	RESISTOR: MIL type RN60D4220F.	5-38
A1A1R11	12	RESISTOR: MIL type RN60E4070D.	5-38
A1A1R12		RESISTOR: MIL type RN60D4420F.	5-38
A1A1R15	13	RESISTOR: MIL type RW69V1R5.	5-38
A1A1R15	12	RESISTOR: MIL type RW69V100.	5-38
A1A1R16		RESISTOR: MIL type RC07GF152J.	5-38
A1A1R19	13	RESISTOR: MIL type RN60D1211F.	5-38
A1A1R19	12	RESISTOR: MIL type RN60E1171D.	5-38
A1A2	13	FREQUENCY DIVIDER: Printed-circuit board w/all components assembled for operation; mfr CMC, dwg MP90-563L2.	5-39
A1A2	12	FREQUENCY DIVIDER: Printed-circuit board w/all components assembled for operation; mfr CMC, dwg MP90-563L3.	5-39

TABLE 6-1A. (Continued)

REF DESIG	NOTES	NAME AND DESCRIPTION	FIG. NO.
A1A2Q19	13	TRANSISTOR: MIL type 2N1304.	5-39
A1A2Q19	12	TRANSISTOR: MIL type 2N1308.	5-39
A1A2Q20	13	TRANSISTOR: MIL type 2N1304.	5-39
A1A2Q20	12	TRANSISTOR: MIL type 2N1308.	5-39
A1A2R1	13,17	RESISTOR: MIL type RC07GF472J.	5-39
A1A2R1	12	RESISTOR: MIL type RC07GF102J.	5-39
A1A2R42	13,17	RESISTOR: MIL type RC07GF563J.	5-39
A1A2R42	12	RESISTOR: MIL type RC07GF393J.	5-39
A1A2R46	13	RESISTOR: MIL type RC07GF563J.	5-39
A1A2R46	12	RESISTOR: MIL type RC07GF393J.	5-39
A1A2R47	13	RESISTOR: MIL type RC07GF563J.	5-39
A1A2R47	12	RESISTOR: MIL type RC07GF393J.	5-39
A1A2R80	13	RESISTOR: MIL type RC07GF472J.	5-39
A1A2R80	12	RESISTOR: MIL type RC07GF102J.	5-39
A1A2R93	13	RESISTOR: MIL type RC07GF563J.	5-39
A1A2R93	12	RESISTOR: MIL type RC07GF393J.	5-39
A1A5	13	FREQUENCY DIVIDER: Printed-circuit board w/all components assembled for operation; mfr CMC, dwg MP90-564L3.	5-40
A1A5	12	FREQUENCY DIVIDER: Printed-circuit board w/all components assembled for operation; mfr CMC, dwg MP90-564L4.	5-40
A1A5C3	13	CAPACITOR: MIL type CM05D620J03.	5-40
A1A5C3	12	CAPACITOR: MIL type CM05D271J03.	5-40
A1A5C16		CAPACITOR: MIL type CM05D620J03.	5-40
A1A5C21		CAPACITOR: MIL type CK62AW822M.	5-40
A1A5C22		CAPACITOR: MIL type CK62AW822M.	5-40
A1A5C23	13	CAPACITOR: MIL type CM05D820J03.	5-40
A1A5C23	12	CAPACITOR: MIL type CM05D270J03.	5-40
A1A5C26		CAPACITOR: MIL type CK62AW822M.	5-40
A1A5C27		CAPACITOR: MIL type CM05C180K03.	5-40
A1A5C30	13	CAPACITOR: MIL type CM05D101J03.	5-40
A1A5C30	12	CAPACITOR: MIL type CM05D680J03.	5-40
A1A5C31	13	CAPACITOR: MIL type CM05C180K03.	5-40
A1A5C31	12	CAPACITOR: MIL type CM05C050K03.	5-40
A1A5CR19	13	SEMICONDUCTOR DEVICE, DIODE: MIL type 1N276.	5-40
A1A5CR19	12	SEMICONDUCTOR DEVICE, DIODE: MIL type 1N3064.	5-40
A1A5CR24	13	Not Used.	
A1A5CR24	12	SEMICONDUCTOR DEVICE, DIODE: MIL type 1N3064.	5-40
A1A5E5	13	Not Used.	
A1A5E5	12	TERMINAL, STUD: MIL type SE12-X-C-04.	5-40
A1A5Q11	13	TRANSISTOR: MIL type 2N706.	5-40
A1A5Q11	12	TRANSISTOR: Type 2N2369A; mfr CMC, dwg MP4906072.	5-40
A1A5Q12	13	TRANSISTOR: MIL type 2N706.	5-40
A1A5Q12	12	TRANSISTOR: Type 2N2369A; mfr CMC, dwg MP4906072.	5-40
A1A5Q13	13	TRANSISTOR: MIL type 2N706.	5-40
A1A5Q13	12	TRANSISTOR: Type 2N2369A; mfr CMC, dwg MP4906072.	5-40
A1A5R3	13	RESISTOR: MIL type RC07GF472J.	5-40
A1A5R3	12	RESISTOR: MIL type RC07GF102J.	5-40
A1A5R27	13	RESISTOR: MIL type RC07GF472J.	5-40
A1A5R27	12	RESISTOR: MIL type RC07GF102J.	5-40
A1A5R35	13	RESISTOR: MIL type RC07GF562J.	5-40
A1A5R35	12	RESISTOR: MIL type RC07GF182J.	5-40

TABLE 6-1A. (Continued)

REF DESIG	NOTES	NAME AND DESCRIPTION	FIG. NO.
A1A5R36	13	RESISTOR: MIL type RC07GF473J.	5-40
A1A5R36	12	RESISTOR: MIL type RC07GF273J.	5-40
A1A5R37	13	RESISTOR: MIL type RC07GF123J.	5-40
A1A5R37	12	RESISTOR: MIL type RC07GF822J.	5-40
A1A5R38	13	RESISTOR: MIL type RC07GF273J.	5-40
A1A5R38	12	RESISTOR: MIL type RC07GF822J.	5-40
A1A5R39	13	RESISTOR: MIL type RC07GF472J.	5-40
A1A5R39	12	RESISTOR: MIL type RC07GF332J.	5-40
A1A5R40	13	RESISTOR: MIL type RC07GF681J.	5-40
A1A5R40	12	RESISTOR: MIL type RC07GF332J.	5-40
A1A5R41	13	RESISTOR: MIL type RC07GF103J.	5-40
A1A5R41	12	RESISTOR: MIL type RC07GF123J.	5-40
A1A5R51	13	RESISTOR: MIL type RL32AD680J.	5-40
A1A5R51	12	Not Used.	5-40
A1A5R54	13	RESISTOR: MIL type RC07GF682J.	5-40
A1A5R54	12	RESISTOR: MIL type RC07GF562J.	5-40
A1A5R55	13	RESISTOR: MIL type RC07GF272J.	5-40
A1A5R55	12	RESISTOR: MIL type RL205222J.	5-40
A1A5R56	13	RESISTOR: MIL type RC07GF333J.	5-40
A1A5R56	12	RESISTOR: MIL type RC07GF473J.	5-40
A1A5R57	13	RESISTOR: MIL type RC07GF333J.	5-40
A1A5R57	12	RESISTOR: MIL type RC07GF473J.	5-40
A1A5R58	13	RESISTOR: MIL type RC07GF682J.	5-40
A1A5R58	12	RESISTOR: MIL type RC07GF562J.	5-40
A1A5R62	13	RESISTOR: MIL type RC07GF682J.	5-40
A1A5R62	12	RESISTOR: MIL type RC07GF562J.	5-40
A1A5R68	13	RESISTOR: MIL type RC07GF123J.	5-40
A1A5R68	12	RESISTOR: MIL type RC07GF512J.	5-40
A1A6	13	FREQUENCY MULTIPLIER: Printed-circuit board w/all components assembled for operation; mfr CMC, dwg MP25-526L8.	5-41
A1A6	15	FREQUENCY MULTIPLIER: Printed-circuit board w/all components assembled for operation; mfr CMC, dwg MP25-526L10.	5-41
A1A6	10	FREQUENCY MULTIPLIER: Printed-circuit board w/all components assembled for operation; mfr CMC, dwg MP25-526L11.	5-41
A1A6C3	11,14	CAPACITOR, FIXED, PLASTIC DIELECTRIC: 0.05 μfd +40% -0%, 100 vdcw; mfr SAN, P/N W20982; or mfr WES, P/N 23M-05.	5-41
A1A6C3	10	CAPACITOR: 0.047 μfd, +40% -0%, 100 vdcw; mfr SAN, P/N WM14BX473J.	5-41
A1A6C8	13	CAPACITOR: MIL type CM05D221J03.	5-41
A1A6C8	12	Not Used.	
A1A6C9		CAPACITOR: MIL type CM05F101J03.	5-41
A1A6C11	13	CAPACITOR: MIL type CM05D270J03.	5-41
A1A6C11	12	Not Used.	
A1A6C13	13	CAPACITOR: MIL type CM05D270J03.	5-41
A1A6C13	12	Not Used.	
A1A6C17		CAPACITOR: MIL type CM05D151J03.	5-41
A1A6C25	13	CAPACITOR: MIL type CM05C100K03.	5-41
A1A6C25	12	Not Used.	
A1A6C26	13	CAPACITOR: MIL type CK06CW222K.	5-41
A1A6C26	12	CAPACITOR: MIL type CM05D221J03.	5-41

TABLE 6-1A. (Continued)

REF DESIG	NOTES	NAME AND DESCRIPTION	FIG. NO.
A1A6C30		CAPACITOR: MIL type CM05D270J03.	5-41
A1A6C32	13	CAPACITOR: MIL type CM05D270J03.	5-41
A1A6C32	12	CAPACITOR: MIL type CM05D121J03.	5-41
A1A6C47		CAPACITOR: MIL type CC20UJ330G.	5-41
A1A6E5	13	TERMINAL, STUD, TP5: MIL type SE12-X-C-04.	5-41
A1A6E5	12	Not Used.	
A1A6L6		COIL, RADIO FREQUENCY: 1.8 to 3.5 μh at 10 mc, 19 turns No. 28 wire, slug-tuned; mfr CMC, dwg MP5101260.	5-41
A1A6Q11	13	TRANSISTOR: MIL type 2N706.	5-41
A1A6Q11	12	TRANSISTOR: Type 2N2369A; mfr CMC, dwg MP4906072.	5-41
A1A6Q12	13	TRANSISTOR: MIL type 2N706.	5-41
A1A6Q12	12	TRANSISTOR: Type 2N2369A; mfr CMC, dwg MP4906072.	5-41
A1A6Q14	13	TRANSISTOR: MIL type 2N706.	5-41
A1A6Q14	12	TRANSISTOR: Type 2N2369A; mfr CMC, dwg MP4906072.	5-41
A1A6Q20	13	TRANSISTOR: MIL type 2N706.	5-41
A1A6Q20	12	TRANSISTOR: MIL type 2N697.	5-41
A1A6R7		RESISTOR: MIL type RC07GF104J.	5-41
A1A6R13	13	RESISTOR: MIL type RC07GF333J.	5-41
A1A6R13	12	RESISTOR: MIL type RC07GF153J.	5-41
A1A6R20		RESISTOR: MIL type RC07GF153J.	5-41
A1A6R21		RESISTOR: MIL type RC07GF102J.	5-41
A1A6R44	13	RESISTOR: MIL type RC07GF102J.	5-41
A1A6R44	12	RESISTOR: MIL type RC07GF471J.	5-41
A1A6R47	13	RESISTOR: MIL type RC07GF102J.	5-41
A1A6R47	12	RESISTOR: MIL type RC07GF471J.	5-41
A1A6R51	13	RESISTOR: MIL type RC07GF472J.	5-41
A1A6R51	12	RESISTOR: MIL type RN60D3321F.	5-41
A1A6R52	13	RESISTOR: MIL type RC07GF223J.	5-41
A1A6R52	12	RESISTOR: MIL type RN60D3322F.	5-41
A1A6R53	13	RESISTOR: MIL type RL20AD471J.	5-41
A1A6R53	12	RESISTOR: MIL type RL20AD272J.	5-41
A1A6R55	13	RESISTOR: MIL type RC07GF472J.	5-41
A1A6R55	12	RESISTOR: MIL type RC07GF102J.	5-41
A1A6R56	13	RESISTOR: MIL type RL20AD331J.	5-41
A1A6R56	12	RESISTOR: MIL type RL32S121J.	5-41
A1A7	13	CONTROL, DISPLAY: Printed-circuit board w/all components assembled for operation; mfr CMC, dwg MP20-523L4.	5-42
A1A7	12	CONTROL, DISPLAY: Printed-circuit board w/all components assembled for operation; mfr CMC, dwg MP20-523L5.	5-42
A1A7	4	CONTROL, DISPLAY: Printed-circuit board w/all components assembled for operation; mfr CMC, dwg MP20-523L6.	5-42
A1A7C1	13	CAPACITOR: MIL type CS13AF010K.	5-42
A1A7C1	12	CAPACITOR, FIXED, TANTALUM: 1.1 μf, 20 vdcw; mfr TAN, P/N S1.1-20NIKI.	5-42
A1A7C6		CAPACITOR: MIL type CM05D101J03.	5-42
A1A7C7		CAPACITOR: MIL type CM05D101J03.	5-42
A1A7CR7	6	SEMICONDUCTOR DEVICE, DIODE: MIL type 1N483B.	5-42
A1A7Q13	13	TRANSISTOR: MIL type 2N1304.	5-42
A1A7Q13	12	TRANSISTOR: MIL type 2N1711.	5-42
A1A7R10	13	RESISTOR: MIL type RC07GF473J.	5-42
A1A7R10	12	RESISTOR: MIL type RC07GF393J.	5-42
A1A7R14		RESISTOR: MIL type RC07GF273J.	5-42
A1A7R15		RESISTOR: MIL type RC07GF273J.	5-42
A1A7R24	13	RESISTOR: MIL type RC07GF473J.	5-42
A1A7R24	12	RESISTOR: MIL type RC07GF393J.	5-42
A1A7R40	13	RESISTOR: MIL type RL42S152J.	5-42
A1A7R40	12	RESISTOR: MIL type RL20S223J.	5-42

TABLE 6-1A. (Continued)

REF DESIG	NOTES	NAME AND DESCRIPTION	FIG. NO.
A1A8	13	AMPLIFIER-ELECTRONIC GATE: Printed-circuit board w/all components assembled for operation; mfr CMC, dwg MP14-545L6.	5-43
A1A8	15	AMPLIFIER-ELECTRONIC GATE: Printed-circuit board w/all components assembled for operation; mfr CMC, dwg MP14-545L8.	5-43
A1A8	10	AMPLIFIER-ELECTRONIC GATE: Printed-circuit board w/all components assembled for operation; mfr CMC, dwg MP14-545L9.	5-43
A1A8C1		CAPACITOR: MIL type CK06CW222K.	5-43
A1A8C5	13	CAPACITOR: MIL type CM05D390J03.	5-43
A1A8C5	12	CAPACITOR: MIL type CM05C180K03.	5-43
A1A8C21		CAPACITOR: Same as A1A6C3.	5-43
A1A8C22		CAPACITOR: Same as A1A6C3.	5-43
A1A8C23		CAPACITOR: Same as A1A6C3.	5-43
A1A8C26	11,14	CAPACITOR, FIXED, PLASTIC DIELECTRIC: 0.05 μfd +40% -0%, 100 vdcw; mfr SAN, P/N W20982.	5-43
A1A8C26	10	CAPACITOR: 0.047 μfd +40% -0%, 100 vdcw; mfr SAN, P/N WM14BX473J.	5-43
A1A8CR9	13	CAPACITOR: MIL type 1N3064.	5-43
A1A8CR9	12	CAPACITOR: MIL type 1N276.	5-43
A1A8CR11		SEMICONDUCTOR DEVICE, DIODE: Type 1N4524; mfr CMC, dwg MP4300180.	5-43
A1A8CR14	13	Not Used.	
A1A8CR14	12	CAPACITOR: MIL type 1N276.	5-43
A1A8E5		BEAD, FERRITE: 0.113 inch long, 0.138 inch dia., 0.059 inch dia. hole along length; mfr FER, P/N K500100/3B.	5-43
A1A8E7	13	Not Used.	
A1A8E7	12	TERMINAL, STUD: MIL type SE16-X-C-01.	5-43
A1A8E8	13	Not Used.	
A1A8E8	12	TERMINAL, STUD: MIL type SE16-X-C-01.	5-43
A1A8R2	13	RESISTOR: MIL type RC07GF563J.	5-43
A1A8R2	12	RESISTOR: MIL type RC07GF393J.	5-43
A1A8R4	13	RESISTOR: MIL type RC07GF563J.	5-43
A1A8R4	12	RESISTOR: MIL type RC07GF393J.	5-43
A1A8R12	13	RESISTOR: MIL type RC07GF563J.	5-43
A1A8R12	12	RESISTOR: MIL type RC07GF273J.	5-43
A1A8R25		RESISTOR: MIL type RL20AD101J.	5-43
A1A8R30		RESISTOR: MIL type RT22C2P202.	5-43
A1A8R43		RESISTOR: MIL type RL20AD681J.	5-43
A1A9	13	COUNTER, ELECTRONIC, DIGITAL: Printed-circuit board w/all components assembled for operation; mfr CMC, dwg MP90-565L6.	5-44
A1A9	15	COUNTER, ELECTRONIC, DIGITAL: Printed-circuit board w/all components assembled for operation; mfr CMC, dwg MP90-565L8.	5-44
A1A9	10	COUNTER, ELECTRONIC, DIGITAL: Printed-circuit board w/all components assembled for operation; mfr CMC, dwg MP90-565L9.	5-44
A1A9C1		CAPACITOR: Same as A1A6C3.	5-44
A1A9C8		CAPACITOR: MIL type CM05C100K03.	5-44
A1A9C12		CAPACITOR: MIL type CM05D101J03.	5-44
A1A9C15		CAPACITOR: MIL type CM05D101J03.	5-44
A1A9C16		CAPACITOR: MIL type CM05C100K03.	5-44

TABLE 6-1A. (Continued)

REF DESIG	NOTES	NAME AND DESCRIPTION	FIG. NO.
A1A9C22		CAPACITOR: MIL type CM05C180K03.	5-44
A1A9C28		CAPACITOR: MIL type CM05C100K03.	5-44
A1A9C34		CAPACITOR: MIL type CM05D101J03.	5-44
A1A9C35		CAPACITOR: MIL type CM05C100K03.	5-44
A1A9C36		CAPACITOR: MIL type CM05C100K03.	5-44
A1A9C43		CAPACITOR: MIL type CM05C100K03.	5-44
A1A9C44		CAPACITOR: MIL type CM05C100K03.	5-44
A1A9C52		CAPACITOR: MIL type CM05C100K03.	5-44
A1A9CR64		SEMICONDUCTOR DEVICE, DIODE: Same as A1A8CR11.	5-44
A1A9E6		TERMINAL, STUD: 0.417 inch long, largest dia. 0.094 inch, brass; mfr USE, P/N 7051-C.	5-44
A1A9E7 to A1A9E68		TERMINAL, STUD: Same as A1A9E6.	5-44
A1A9L2		COIL: Same as A1A9L1.	5-44
A1A9L3		COIL, RADIO FREQUENCY: 0.33 μh ±10%, 0.25 watt, molded core; mfr DEL, P/N 1025-08.	5-44
A1A9L7		COIL: Same as A1A9L3.	5-44
A1A9L9		COIL: Same as A1A9L3.	5-44
AlA9L12		COIL: Same as A1A9L3.	5-44
A1A9L13		COIL: Same as A1A9L3.	5-44
A1A9L16		COIL: Same as A1A9L3.	5-44
A1A9L17		COIL: Same as A1A9L3.	5-44
A1A9L20		COIL: Same as A1A9L3.	5-44
A1A9L21	13	COIL, RADIO FREQUENCY: 0.82 μh ±10%, 0.25 w molded core; mfr DEL, P/N 1025-18.	5-44
A1A9L21	12	Not Used.	
A1A9MP1		Deleted.	5-44
A1A9Q2		TRANSISTOR: Type 2N709 selected for beta >50; mfr CMC, dwg MP4906133.	5-44
A1A9Q12		TRANSISTOR: MIL type 2N964.	5-44
A1A9R2		RESISTOR: MIL type RC07GF472J.	5-44
A1A9R6		RESISTOR: MIL type RC07GF561J.	5-44
A1A9R11		RESISTOR: MIL type RT22C2P102.	5-44
A1A9R16		RESISTOR: MIL type RC07GF273J.	5-44
A1A9R18		RESISTOR: MIL type RC07GF181J.	5-44
A1A9R25		RESISTOR: MIL type RC07GF181J.	5-44
A1A9R26		RESISTOR: MIL type RC07GF273J.	5-44
A1A9R29		RESISTOR: MIL type RC07GF391J.	5-44
A1A9R31		RESISTOR: MIL type RC07GF472J.	5-44
A1A9R38		RESISTOR: MIL type RC07GF273J.	5-44
A1A9R40		RESISTOR: MIL type RC07GF181J.	5-44
A1A9R46		RESISTOR: MIL type RC07GF181J.	5-44
A1A9R49		RESISTOR: MIL type RC07GF273J.	5-44
A1A9R52		RESISTOR: MIL type RC07GF273J.	5-44
A1A9R54		RESISTOR: MIL type RC07GF181J.	5-44
A1A9R60		RESISTOR: MIL type RC07GF181J.	5-44
A1A9R63		RESISTOR: MIL type RC07GF273J.	5-44
A1A9R68		RESISTOR: MIL type RC07GF273J.	5-44
A1A9R70		RESISTOR: MIL type RC07GF181J.	5-44

TABLE 6-1A. (Continued)

REF DESIG	NOTES	NAME AND DESCRIPTION	FIG. NO.
A1A9R76		RESISTOR: MIL type RC07GF181J.	5-44
A1A9R79		RESISTOR: MIL type RC07GF273J.	5-44
A1A10	13	GATE, ELECTRONIC: Printed-circuit board w/all components assembled for operation; mfr CMC, dwg MP17-525L4.	5-45
A1A10	15	GATE, ELECTRONIC: Printed-circuit board w/all components assembled for operation; mfr CMC, dwg MP17-525L6.	5-45
A1A10	10	GATE, ELECTRONIC: Printed-circuit board w/all components assembled for operation; mfr CMC, dwg MP17-525L7.	5-45
A1A10C3		CAPACITOR: MIL type CM05D391J03.	5-45
A1A10C6		CAPACITOR: MIL type CM05D391J03.	5-45
A1A10C8		CAPACITOR: MIL type CM05D391J03.	5-45
A1A10C14		CAPACITOR: MIL type CM05C100K03.	5-45
A1A10C16		CAPACITOR: MIL type CM05D101J03.	5-45
A1A10C18		CAPACITOR: MIL type CM05D101J03.	5-45
A1A10C19		CAPACITOR: MIL type CM05C100K03.	5-45
A1A10CR9		SEMICONDUCTOR DEVICE, DIODE: MIL type 1N276.	5-45
A1A10R9	13	RESISTOR: MIL type RC07GF563J.	5-45
A1A10R9	12	RESISTOR: MIL type RC07GF393J.	5-45
A1A10R11		RESISTOR: MIL type RC07GF332J.	5-45
A1A10R30		RESISTOR: MIL type RL20AD681J.	5-45
A1A10R32	13	RESISTOR: MIL type RC07GF822J.	5-45
A1A10R32	12	RESISTOR: MIL type RC07GF562J.	5-45
A1A10R40	13	RESISTOR: MIL type RC07GF392J.	5-45
A1A10R40	12	RESISTOR: MIL type RC07GF272J.	5-45
A1A10R44		RESISTOR: MIL type RC07GF104J.	5-45
A1A10R48		RESISTOR: MIL type RL20AD681J.	5-45
A1A10R53		RESISTOR: MIL type RC07GF182J.	5-45
A1A10R54		RESISTOR: MIL type RC07GF182J.	5-45
A1A11	13	AMPLIFIER, AUDIO FREQUENCY-RADIO FREQUENCY: Printed-circuit board w/all components assembled for operation; mfr CMC, dwg MP14-546L4.	5-46
A1A11	15	AMPLIFIER, AUDIO FREQUENCY-RADIO FREQUENCY: Printed-circuit board w/all components assembled for operation; mfr CMC, dwg MP14-546L6.	5-46
A1A11	10	AMPLIFIER, AUDIO FREQUENCY-RADIO FREQUENCY: Printed-circuit board w/all components assembled for operation; mfr CMC, dwg MP14-546L7.	5-46
A1A11C1	13	CAPACITOR: MIL type CM05D271J03.	5-46
A1A11C1	12	Not Used.	
A1A11C3		CAPACITOR: MIL type CK06CW222K.	5-46
A1A11C12		CAPACITOR: MIL type CM05D620J03.	5-46
A1A11C13		CAPACITOR: MIL type CM05D602J03.	5-46
A1A11C15	13	Not Used.	
A1A11C15	12	CAPACITOR: MIL type CM05D271J03.	5-46
A1A11C17		CAPACITOR: MIL type CK06CW222K.	5-46
A1A11C22	13	CAPACITOR: MIL type CM05C050K03.	5-46
A1A11C22	12	CAPACITOR: MIL type CM05C180K03.	5-46
A1A11C23	13	CAPACITOR: MIL type CM05D470J03.	5-46
A1A11C23	12	CAPACITOR: MIL type CM05C180K03.	5-46
A1A11C26		CAPACITOR: MIL type CM05D620J03.	5-46
A1A11C27		CAPACITOR: MIL type CM05D620J03.	5-46

TABLE 6-1A. (Continued)

REF DESIG	NOTES	NAME AND DESCRIPTION	FIG. NO.
A1A11C29	14,15	CAPACITOR, FIXED, PLASTIC DIELECTRIC: 0.05 μfd +40% -0%; mfr SAN, P/N W20982.	5-46
A1A11C29	10	CAPACITOR, FIXED, PLASTIC DIELECTRIC: 0.05 μfd +40% -0%, 100 vdcw; mfr SAN, P/N WM14BX473J.	5-46
A1A11C29	13	Not Used.	
A1A11CR21	12	SEMICONDUCTOR DEVICE, DIODE: MIL type 1N755A.	5-46
A1A11E7		TERMINAL, STUD: MIL type SE16-X-C-01.	5-46
A1A11E8		TERMINAL, STUD: MIL type SE16-X-C-01.	5-46
A1A11E9 to A1A11E23	13	Not Used.	
A1A11E9	12	TERMINAL, STUD: MIL type SE16-X-C-01.	5-46
A1A11E10	12	TERMINAL, STUD: MIL type SE16-X-C-01.	5-46
A1A11E11	12	TERMINAL, STUD: MIL type SE16-X-C-01.	5-46
A1A11E12	12	TERMINAL, STUD: MIL type SE16-X-C-01.	5-46
A1A11E13	12	TERMINAL, STUD: MIL type SE16-X-C-01.	5-46
A1A11E14	12	TERMINAL, STUD: MIL type SE16-X-C-01.	5-46
A1A11E15	12	TERMINAL, STUD: MIL type SE16-X-C-01.	5-46
A1A11E16	12	TERMINAL, STUD: MIL type SE16-X-C-01.	5-46
A1A11E17	12	TERMINAL, STUD: MIL type SE16-X-C-01.	5-46
A1A11E18	12	TERMINAL, STUD: MIL type SE16-X-C-01.	5-46
A1A11E19	12	TERMINAL, STUD: MIL type SE16-X-C-01.	5-46
A1A11E20	12	TERMINAL, STUD: MIL type SE16-X-C-01.	5-46
A1A11E21	12	TERMINAL, STUD: MIL type SE16-X-C-01.	5-46
A1A11E22	12	TERMINAL, STUD: MIL type SE16-X-C-01.	5-46
A1A11E23	12	TERMINAL, STUD: MIL type SE12-X-C-04.	5-46
A1A11R1		RESISTOR: MIL type RL20AD184G.	5-46
A1A11R6		RESISTOR: MIL type RT22C2P102.	5-46
A1A11R17	13	RESISTOR: MIL type RC07GF122J.	5-46
A1A11R17	12	Not Used.	
A1A11R20	13	RESISTOR: MIL type RC07GF682J.	5-46
A1A11R20	12	Not Used.	
A1A11R21	13	RESISTOR: MIL type RC07GF561J.	5-46
A1A11R21	12	RESISTOR: MIL type RC07GF151J.	5-46
A1A11R23	13	RESISTOR: MIL type RC07GF682J.	5-46
A1A11R23	12	RESISTOR: MIL type RC07GF821J.	5-46
A1A11R24	13	RESISTOR: MIL type RC07GF101J.	5-46
A1A11R24	12	RESISTOR: MIL type RC07GF911J.	5-46
A1A11R26	13	RESISTOR: MIL type RC07GF472J.	5-46
A1A11R26	12	RESISTOR: MIL type RC07GF202J.	5-46
A1A11R43		RESISTOR: MIL type RT22C2P102.	5-46
A1A11R46		RESISTOR: MIL type RC07GF152J.	5-46
A1A11R54	13	RESISTOR: MIL type RC07GF122J.	5-46
A1A11R54	12	Not Used.	
A1A11R57	13	RESISTOR: MIL type RC07GF682J.	5-46
A1A11R57	12	Not Used.	
A1A11R58	13	RESISTOR: MIL type RC07GF561J.	5-46
A1A11R58	12	RESISTOR: MIL type RC07GF151J.	5-46
A1A11R60	13	RESISTOR: MIL type RC07GF682J.	5-46
A1A11R60	12	RESISTOR: MIL type RC07GF821J.	5-46
A1A11R61	13	RESISTOR: MIL type RC07GF101J.	5-46
A1A11R61	12	RESISTOR: MIL type RC07GF911J.	5-46
A1A11R63	13	RESISTOR: MIL type RC07GF472J.	5-46
A1A11R63	12	RESISTOR: MIL type RC07GF202J.	5-46

TABLE 6-1A. (Continued)

REF DESIG	NOTES	NAME AND DESCRIPTION	FIG. NO.
A1A11R64		RESISTOR: MIL type RC07GF682J.	5-46
A1A11R74		RESISTOR: MIL type RC07GF222J.	5-46
A1A11R75	13	Not Used.	
A1A11R75	12	RESISTOR: MIL type RL20S151J.	5-46
A1A12	13	FREQUENCY DIVIDER-DIGITAL DISPLAY INDICATOR: Printed-circuit board w/all components assembled for operation; mfr CMC, dwg MP96-501L5.	5-47
A1A12	12	FREQUENCY DIVIDER-DIGITAL DISPLAY INDICATOR: Printed-circuit board w/all components assembled for operation; mfr CMC, dwg MP96-501L6.	5-47
A1A12R11		RESISTOR: MIL type RC07GF104J.	5-47
A1A12R12		RESISTOR: MIL type RC07GF104J.	5-47
A1A12R20		RESISTOR: MIL type RC07GF104J.	5-47
A1A12R24		RESISTOR: MIL type RC07GF104J.	5-47
A1A12R28		RESISTOR: MIL type RC07GF104J.	5-47
A1A14R32		RESISTOR: MIL type RC07GF104J.	5-47
A1A14R36		RESISTOR: MIL type RC07GF104J.	5-47
A1A12R74	13	RESISTOR: MIL type RC07GF563J.	5-47
A1A12R74	12	RESISTOR: MIL type RC07GF393J.	5-47
A1A12R75	13	RESISTOR: MIL type RC07GF822J.	5-47
A1A12R75	12	RESISTOR: MIL type RC07GF562J.	5-47
A1A12R82	13	RESISTOR: MIL type RC07GF472J.	5-47
A1A12R82	12	RESISTOR: MIL type RC07GF182J.	5-47
A1A13	13	FREQUENCY DIVIDER-DIGITAL DISPLAY INDICATOR: Printed-circuit board w/all components assembled for operation; mfr CMC, dwg MP96-501L5.	5-47
A1A13	12	FREQUENCY DIVIDER-DIGITAL DISPLAY INDICATOR: Printed-circuit board w/all components assembled for operation; mfr CMC, dwg MP96-501L6.	5-47
A1A13R11		RESISTOR: MIL type RC07GF104J.	5-47
A1A13R12		RESISTOR: MIL type RC07GF104J.	5-47
A1A13R20		RESISTOR: MIL type RC07GF104J.	5-47
A1A13R24		RESISTOR: MIL type RC07GF104J.	5-47
A1A13R28		RESISTOR: MIL type RC07GF104J.	5-47
A1A13R32		RESISTOR: MIL type RC07GF104J.	5-47
A1A13R36		RESISTOR: MIL type RC07GF104J.	5-47
A1A13R74	13	RESISTOR: MIL type RC07GF563J.	5-47
A1A13R74	12	RESISTOR: MIL type RC07GF393J.	5-47
A1A13R75	13	RESISTOR: MIL type RC07GF822J.	5-47
A1A13R75	12	RESISTOR: MIL type RC07GF562J.	5-47
A1A13R82	13	RESISTOR: MIL type RC07GF472J.	5-47
A1A13R82	12	RESISTOR: MIL type RC07GF182J.	5-47
A1A14	13	FREQUENCY DIVIDER-DIGITAL DISPLAY INDICATOR: Printed-circuit board w/all components assembled for operation; mfr CMC, dwg MP96-501L5.	5-47
A1A14	12	FREQUENCY DIVIDER-DIGITAL DISPLAY INDICATOR: Printed-circuit board w/all components assembled for operation; mfr CMC, dwg MP96-501L6.	5-47
A1A14R2		RESISTOR: MIL type RL20AD204J.	5-47
A1A14R11		RESISTOR: MIL type RC07GF104J.	5-47

TABLE 6-1A. (Continued)

REF DESIG	NOTES	NAME AND DESCRIPTION	FIG. NO.
A1A14R12		RESISTOR: MIL type RC07GF104J.	5-47
A1A14R20		RESISTOR: MIL type RC07GF104J.	5-47
A1A14R24		RESISTOR: MIL type RC07GF104J.	5-47
A1A14R28		RESISTOR: MIL type RC07GF104J.	5-47
A1A14R32		RESISTOR: MIL type RC07GF104J.	5-47
A1A14R36		RESISTOR: MIL type RC07GF104J.	5-47
A1A14R74	13	RESISTOR: MIL type RC07GF563J.	5-47
A1A14R74	12	RESISTOR: MIL type RC07GF393J.	5-47
A1A14R75	13	RESISTOR: MIL type RC07GF822J.	5-47
A1A14R75	12	RESISTOR: MIL type RC07GF562J.	5-47
A1A14R82	13	RESISTOR: MIL type RC07GF472J.	5-47
A1A14R82	12	RESISTOR: MIL type RC07GF182J.	5-47
A1A15	13	FREQUENCY DIVIDER-DIGITAL DISPLAY INDICATOR: Printed-circuit board w/all components assembled for operation; mfr CMC, dwg MP96-501L5.	5-47
A1A15	12	FREQUENCY DIVIDER-DIGITAL DISPLAY INDICATOR: Printed-circuit board w/all components assembled for operation; mfr CMC, dwg MP96-501L6.	5-47
A1A15C19		CAPACITOR: MIL type CM05D470J03.	5-47
A1A15R11		RESISTOR: MIL type RC07GF104J.	5-47
A1A15R12		RESISTOR: MIL type RC07GF104J.	5-47
A1A15R20		RESISTOR: MIL type RC07GF104J.	5-47
A1A15R24		RESISTOR: MIL type RC07GF104J.	5-47
A1A15R28		RESISTOR: MIL type RC07GF104J.	5-47
A1A15R32		RESISTOR: MIL type RC07GF104J.	5-47
A1A15R36		RESISTOR: MIL type RC07GF104J.	5-47
A1A15R74	13	RESISTOR: MIL type RC07GF563J.	5-47
A1A15R74	12	RESISTOR: MIL type RC07GF393J.	5-47
A1A15R75	13	RESISTOR: MIL type RC07GF822J.	5-47
A1A15R75	12	RESISTOR: MIL type RC07GF562J.	5-47
A1A15R82	13	RESISTOR: MIL type RC07GF472J.	5-47
A1A15R82	12	RESISTOR: MIL type RC07GF182J.	5-47
A1A16	13	FREQUENCY DIVIDER-DIGITAL DISPLAY INDICATOR: Printed-circuit board w/all components assembled for operation; mfr CMC, dwg MP96-501L5.	5-47
A1A16	12	FREQUENCY DIVIDER-DIGITAL DISPLAY INDICATOR: Printed-circuit board w/all components assembled for operation; mfr CMC, dwg MP96-501L6.	5-47
A1A16R7		RESISTOR: MIL type RL20AD183J.	5-47
A1A16R11		RESISTOR: MIL type RC07GF104J.	5-47
A1A16R12		RESISTOR: MIL type RC07GF104J.	5-47
A1A16R20		RESISTOR: MIL type RC07GF104J.	5-47
A1A16R24		RESISTOR: MIL type RC07GF104J.	5-47
A1A16R28		RESISTOR: MIL type RC07GF104J.	5-47
A1A16R32		RESISTOR: MIL type RC07GF104J.	5-47
A1A16R36		RESISTOR: MIL type RC07GF104J.	5-47
A1A16R74	13	RESISTOR: MIL type RC07GF563J.	5-47
A1A16R74	12	RESISTOR: MIL type RC07GF393J.	5-47
A1A16R75	13	RESISTOR: MIL type RC07GF822J.	5-47
A1A16R75	12	RESISTOR: MIL type RC07GF562J.	5-47

TABLE 6-1A. (Continued)

REF DESIG	NOTES	NAME AND DESCRIPTION	FIG. NO.
A1A16R82	13	RESISTOR: MIL type RC07GF472J.	5-47
A1A16R82	12	RESISTOR: MIL type RC07GF182J.	5-47
A1A17	13	FREQUENCY DIVIDER–DIGITAL DISPLAY INDICATOR: Printed-circuit board w/all components assembled for operation; mfr CMC, dwg MP96-502L4.	5-48
A1A17	12	FREQUENCY DIVIDER–DIGITAL DISPLAY INDICATOR: Printed-circuit board w/all components assembled for operation; mfr CMC, dwg MP96-502L5.	5-48
A1A17R11		RESISTOR: MIL type RC07GF104J.	5-48
A1A17R12		RESISTOR: MIL type RC07GF104J.	5-48
A1A17R20		RESISTOR: MIL type RC07GF104J.	5-48
A1A17R24		RESISTOR: MIL type RC07GF104J.	5-48
A1A17R28		RESISTOR: MIL type RC07GF104J.	5-48
A1A17R32		RESISTOR: MIL type RC07GF104J.	5-48
A1A17R36		RESISTOR: MIL type RC07GF104J.	5-48
A1A17R73		RESISTOR: MIL type RL20AD681J.	5-48
A1A17R74	13	RESISTOR: MIL type RC07GF563J.	5-48
A1A17R74	12	RESISTOR: MIL type RC07GF393J.	5-48
A1A17R75	13	RESISTOR: MIL type RC07GF822J.	5-48
A1A17R75	12	RESISTOR: MIL type RC07GF562J.	5-48
A1A17R81		RESISTOR: MIL type RL20AD681J.	5-48
A1A17R82	13	RESISTOR: MIL type RC07GF472J.	5-48
A1A17R82	12	RESISTOR: MIL type RC07GF182J.	5-48
A1A18	13	FREQUENCY DIVIDER–DIGITAL DISPLAY INDICATOR: Printed-circuit board w/all components assembled for operation; mfr CMC, dwg MP96-502L4.	5-48
A1A18	12	FREQUENCY DIVIDER–DIGITAL DISPLAY INDICATOR: Printed-circuit board w/all components assembled for operation; mfr CMC, dwg MP96-502L5.	5-48
A1A18R11		RESISTOR: MIL type RC07GF104J.	5-48
A1A18R12		RESISTOR: MIL type RC07GF104J.	5-48
A1A18R20		RESISTOR: MIL type RC07GF104J.	5-48
A1A18R24		RESISTOR: MIL type RC07GF104J.	5-48
A1A18R28		RESISTOR: MIL type RC07GF104J.	5-48
A1A18R32		RESISTOR: MIL type RC07GF104J.	5-48
A1A18R36		RESISTOR: MIL type RC07GF104J.	5-48
A1A18R73		RESISTOR: MIL type RL20AD681J.	5-48
A1A18R74	13	RESISTOR: MIL type RC07GF563J.	5-48
A1A18R74	12	RESISTOR: MIL type RC07GF393J.	5-48
A1A18R75	13	RESISTOR: MIL type RC07GF822J.	5-48
A1A18R75	12	RESISTOR: MIL type RC07GF562J.	5-48
A1A18R81		RESISTOR: MIL type RL20AD681J.	5-48
A1A18R82	13	RESISTOR: MIL type RC07GF472J.	5-48
A1A18R82	12	RESISTOR: MIL type RC07GF182J.	5-48
A1A19	13	FREQUENCY DIVIDER–DIGITAL DISPLAY INDICATOR: Printed-circuit board w/all components assembled for operation; mfr CMC, dwg MP93-525L6.	5-49
A1A19	15	FREQUENCY DIVIDER–DIGITAL DISPLAY INDICATOR: Printed-circuit board w/all components assembled for operation; mfr CMC, dwg MP93-525L7.	5-49

TABLE 6-1A. (Continued)

REF DESIG	NOTES	NAME AND DESCRIPTION	FIG. NO.
A1A19	10	FREQUENCY DIVIDER–DIGITAL DISPLAY INDICATOR: Printed-circuit board w/all components assembled for operation; mfr CMC, dwg MP93-525L8.	5-49
A1A19C2	13	CAPACITOR: MIL type CK62AW822M.	5-49
A1A19C2	15,14	CAPACITOR, FIXED, PLASTIC DIELECTRIC: 0.05 μfd +40% -0%; mfr SAN, P/N W20982; or mfr WES, P/N 23M-05.	5-49
A1A19C2	10	CAPACITOR, FIXED, CERAMIC DIELECTRIC: 0.047 μfd +40% -0%, 100 vdcw; mfr SAN, P/N WM14BX473J.	5-49
A1A19C3	13	CAPACITOR: MIL type CM05D470J03.	5-49
A1A19C3	12	CAPACITOR: MIL type CM05C050K03.	5-49
A1A19R11		RESISTOR: MIL type RC07GF104J.	5-49
A1A19R12		RESISTOR: MIL type RC07GF104J.	5-49
A1A19R20		RESISTOR: MIL type RC07GF104J.	5-49
A1A19R24		RESISTOR: MIL type RC07GF104J.	5-49
A1A19R28		RESISTOR: MIL type RC07GF104J.	5-49
A1A19R32		RESISTOR: MIL type RC07GF104J.	5-49
A1A19R36		RESISTOR: MIL type RC07GF104J.	5-49
A1A19R52	13	RESISTOR: MIL type RC07GF472J.	5-49
A1A19R52	12	RESISTOR: MIL type RC07GF182J.	5-49
A1A19R55	13	RESISTOR: MIL type RC07GF822J.	5-49
A1A19R55	12	RESISTOR: MIL type RC07GF562J.	5-49
A1A19R56	13	RESISTOR: MIL type RC07GF563J.	5-49
A1A19R56	12	RESISTOR: MIL type RC07GF393J.	5-49
A1A20	11	AMPLIFIER, AUDIO FREQUENCY–RADIO FREQUENCY: Printed-circuit board w/all components assembled for operation; mfr CMC, dwg MP13-509L2.	5-50
A1A20	10	AMPLIFIER, AUDIO FREQUENCY–RADIO FREQUENCY: Printed-circuit board w/all components assembled for operation; mfr CMC, dwg MP13-509L4.	5-50
A1A20C18		CAPACITOR: MIL type CM05C100K03.	5-50
A1A20C21		CAPACITOR: Same as A1A6C3.	5-50
A1A20C25		CAPACITOR: Same as A1A6C3.	5-50
A1A20C26		CAPACITOR: Same as A1A6C3.	5-50
A1A20C28		CAPACITOR: MIL type CM05D101J03.	5-50
A1A20C31		CAPACITOR: Same as A1A6C3.	5-50
A1A20E1	13	TERMINAL, STUD: Same as A1A9E6.	5-50
A1A20E1	12	TERMINAL, STUD: Brass, 0.417 inch long, 0.094 inch dia.; mfr USE, P/N 7051-C.	5-50
A1A20R12		RESISTOR: MIL type RL20AD331J.	5-50
A1A21	1	ATTENUATOR, VARIABLE: Switch, resistors, and capacitors assembled for operation; mfr CMC, dwg MP13-523L4.	5-10
A1A21	2,5	ATTENUATOR, VARIABLE: Switch, resistors, and capacitors assembled for operation; mfr CMC, dwg MP13-537L1.	5-10
A1A21C17	1	CAPACITOR: MIL type CK06CW222K.	5-10
A1A21C20		CAPACITOR: MIL type CP05A1KF104K3.	5-9
A1A21C21	2	CAPACITOR: MIL type CK60BX2R2K.	5-10
A1A21E4		Not Used.	
A1A21E5		Not Used.	
A1A21E6	2	TERMINAL: Brass, 0.5 inch long, 0.172 inch maximum dia.; mfr USE, P/N 4500A.	5-10
A1A21E7	2	TERMINAL: Same as A1A21E6.	5-10
A1A21E8	2	TERMINAL: Same as A1A21E6.	5-10
A1A21E9	2	TERMINAL: Same as A1A21E6.	5-10
A1A21E10	2	TERMINAL: Same as A1A21E6.	5-10
A1A21MP23		BRACKET: Listed for reference only.	5-9

TABLE 6-1A. (Continued)

REF DESIG	NOTES	NAME AND DESCRIPTION	FIG. NO.
A1A21R49		RESISTOR: MIL type RC07GF101J.	5-10
A1A21S7		SWITCH, ROTARY: 3 sections, 7 positions, nonshorting contacts; mfr OAK, P/N SR05N30B3MP.	5-10
A1A22		ATTENUATOR–RESISTOR, VARIABLE: Switch, resistors, capacitors and printed-circuit board assembled for operation; mfr CMC, dwg MP13-524L4.	5-11
A1A22C34		CAPACITOR: MIL type CM05C100K03.	5-11
A1A22C39 to A1A22C45		Not Used.	
A1A22C46		CAPACITOR: MIL type CM05C100K03.	5-11
A1A22R50		RESISTOR: MIL type RC07GF104J.	5-11
A1A23C1 to A1A23C33		Not Used.	
A1A23C34		CAPACITOR: MIL type CM05C100K03.	5-12
A1A23C35		CAPACITOR: MIL type CK60BX2R2K.	5-12
A1A23C36		CAPACITOR: MIL type CM05D101J03.	5-12
A1A23C37		CAPACITOR: MIL type CM06D821J03.	5-12
A1A23C38		CAPACITOR: MIL type CM06D821J03.	5-12
A1A23C39 to A1A23C45		Not Used.	
A1A23C46		CAPACITOR: CM05C100K03.	5-12
A1A23E1		Not Used.	
A1A23R1 to A1A23R20		Not Used.	
A1A23R21		RESISTOR: MIL type RN60D6813F.	5-12
A1A23R22		RESISTOR: MIL type RN60D5113F.	5-12
A1A23R23		RESISTOR: MIL type RN70D9093F.	5-12
A1A23R24		RESISTOR: MIL type RN60D1103F.	5-12
A1A23R25		RESISTOR: MIL type RN70D9763F.	5-12
A1A23R26		RESISTOR: MIL type RC07GF333J.	5-12
A1A23R27		RESISTOR: MIL type RN70D1004F.	5-12
A1A23R28		RESISTOR: MIL type RC07GF103J.	5-12
A1A23R29		RESISTOR: MIL type RN70D1004F.	5-12
A1A23R30		RESISTOR: MIL type RC07GF332J.	5-12
A1A23R31		RESISTOR: MIL type RN70D1004F.	5-12
A1A23R32		RESISTOR: MIL type RC07GF102J.	5-12
A1A23R33		RESISTOR, VARIABLE: Same as A1A22R33.	5-12
A1A23R34 to A1A23R49		Not Used.	
A1A23R50		RESISTOR: MIL type RC07GF104J.	5-12
A1A23R51		Not Used.	
A1A23S1 to A1A23S7		Not Used.	
A1A23S8		SWITCH, ROTARY: Same as A1A22S8.	5-12
A1A23S9		Not Used.	
A1A23S10		Not Used.	

TABLE 6-1A. (Continued)

REF DESIG	NOTES	NAME AND DESCRIPTION	FIG. NO.
A1C1		CAPACITOR, FIXED, PAPER DIELECTRIC: 0.47 μf ±20%, 400 vdc, with mtg bracket; mfr SAN, P/N 18312C.	5-34
A1C10		Not Used.	
A1C11	1,16	CAPACITOR, FIXED, PLASTIC DIELECTRIC: 0.05 μf +40% -0%; mfr SAN, P/N W20982; or mfr WES, P/N 23M-05.	5-14
A1C11	2	CAPACITOR: MIL type CK16AX473K.	5-14
A1C12	1,16	CAPACITOR, FIXED, PLASTIC DIELECTRIC: 0.05 μf +40% -0%; mfr SAN, P/N W20982; or mfr WES, P/N 23M-05.	5-14
A1C12	2	CAPACITOR: MIL type CK16AX473K.	5-14
A1C33		CAPACITOR: MIL type CP05A1KF104K3.	5-9
A1C39		CAPACITOR: MIL type CP05A1KF104K3.	5-9
A1C42		CAPACITOR: MIL type CM06D182J03.	5-34
A1C43		CAPACITOR: MIL type CM06D182J03.	5-34
A1C44	12	CAPACITOR: MIL type CM05D270J03.	5-34
A1CR6	12	SEMICONDUCTOR DEVICE, DIODE: Same as A1A8CR11.	5-34
A1DS1		LAMP-LENS CAP: MIL type MS25252-NE-2 lamp with red lens; mfr MAR P/N 36450-6.	5-35
A1E1		PRINTED-CIRCUIT BOARD: Glass epoxy resin, 1.400 inch wide, 1.962 inch high, 0.062 inch thick; mfr CMC, dwg MP1291308.	5-11
A1E2		PRINTED-CIRCUIT BOARD: Same as A1E1.	
A1E3	3	POST, BINDING: Octagonal, brass, nickel plated, 1-15/16 inch long (closed), 5/16 inch dia.; mfr HHS. P/N 208.	5-33
A1FL1/ A1J12		FILTER LINE-RECEPTACLE, CONNECTOR: 115 vac ±10% 50-400 cps, 1.2 amperes; mfr CMC, dwg MP4096004.	5-37
A1J1		CONNECTOR: MIL type UG-625B/U.	5-9
A1J12		CONNECTOR: Part of A1FL1, not separately replaceable.	5-37
A1MP23		Not Used.	
A1MP24		COVER, ELECTRICAL CONNECTOR: MIL type MS25043-36C.	5-37
A1MP25		COVER, ELECTRICAL CONNECTOR: MIL type MS25043-14C.	5-37
A1MP26		SHIELD: Listed for reference only.	5-9
A1P3		CONNECTOR: Same as A1P2.	5-33
A1R50	13	Not Used.	
A1R50	12	RESISTOR: MIL type RL32AD680J.	5-34
A1R51	13	Not Used.	
A1R51	12	RESISTOR: MIL type RJ22CP201 or RT22CP201.	5-33
A1R52	13	Not Used.	
A1R52	12	RESISTOR: MIL type RC07GF474J.	5-34
A1R52	7	RESISTOR: MIL type RC07GF473J.	
A1S2		Deleted.	
A1S2/A1S3		SWITCH, ROTARY: MIL type SR02N30B1MPC.	5-35
A1S3		Deleted.	
A1S9		SWITCH: MIL type MS24656-231.	5-9
A1S10		SWITCH: MIL type MS24655-231.	5-9
A1XDS1		LAMPHOLDER: Two brass terminals, with built-in 62 k resistor, 1 inch long, 0.427 inch dia.; mfr MAR, P/N 38-36480.	5-35
A2A1	13	FREQUENCY MULTIPLIER: Printed-circuit board w/all components assembled for operation; mfr CMC, dwg MP25-527L3.	5-51
A2A1	15	FREQUENCY MULTIPLIER: Printed-circuit board w/all components assembled for operation; mfr CMC, dwg MP25-527L5.	5-51
A2A1	10	FREQUENCY MULTIPLIER: Printed-circuit board w/all components assembled for operation; mfr CMC, dwg MP25-527L6.	5-51
A2A1C3		CAPACITOR: MIL type CM05D620J03.	5-53
A2A1C4		CAPACITOR: MIL type CM05D620J03.	5-53
A2A1C5		CAPACITOR: MIL type CM05D620J03.	5-53

TABLE 6-1A. (Continued)

REF DESIG	NOTES	NAME AND DESCRIPTION	FIG. NO.
A2A1C25	13	Not Used.	
A2A1C25	14, 15	CAPACITOR, FIXED, PLASTIC DIELECTRIC: 0.05 μfd +40% -0%; mfr SAN, P/N W20982.	5-53
A2A1C25	10	CAPACITOR, FIXED, CERAMIC DIELECTRIC: 0.047 μfd +40% -0%, 100 vdcw; mfr SAN, P/N WM14BX473J.	5-53
A2A1R4	13	Not Used.	
A2A1R4	12	RESISTOR: MIL type RC07GF102J.	5-53
A2C8	13	CAPACITOR: MIL type CM05C050K03.	5-20
A2C8	18	CAPACITOR: MIL type CC20CH050G.	5-20
A2C8	19	CAPACITOR: MIL type CC20CH040C.	5-20
A2C10	13	CAPACITOR: MIL type CM05C100K03.	5-41
A2C10	12	CAPACITOR: MIL type CC20CH150G.	5-41
A2C12	13	CAPACITOR: MIL type CM05D220J03.	5-20
A2C12	12	CAPACITOR: MIL type CC30CH270G.	5-20
A2C14	13	CAPACITOR: Selected as described in par. 5-5w.	5-20
A2C14	12	CAPACITOR: MIL type CC30CH270G.	5-20
A2C15	13	CAPACITOR: MIL type CM05D390J03.	5-40
A2C15	12	CAPACITOR: MIL type CC20CH220G.	5-40
A2C22		CAPACITOR: MIL type CK60AW102M.	5-54
A2C23		CAPACITOR: MIL type CK60AW102M.	5-54
A2C24	13	CAPACITOR: MIL type CK06CW103K.	5-52
A2C24	12	CAPACITOR: MIL type CK60AW102M.	5-52
A2C25	13	CAPACITOR: MIL type CK06CW103K.	5-52
A2C25	12	CAPACITOR: MIL type CK60AW102M.	5-52
A2C26		CAPACITOR: MIL type CK60AW102M.	5-54
A2C29		CAPACITOR: MIL type CM05C050K03.	5-52
A2C31		CAPACITOR: MIL type CM05C050K03.	5-52
A2C35	13	CAPACITOR: MIL type CM05C050K03.	5-52
A2C35	12	Not Used.	
A2C46		CAPACITOR, FIXED, CERAMIC: 0.1 μf ±5%; mfr ER, P/N 8133-000-W5R104M.	5-54
A2C51		CAPACITOR: MIL type CM05D101J03.	5-54
A2C56		CAPACITOR: MIL type CM05D101J03.	5-54
A2C63	13	Not Used.	
A2C63	12	CAPACITOR: MIL type CK60AW102M.	5-52
A2C64	13	Not Used.	
A2C64	12	CAPACITOR: MIL type 2404X5U0152M.	5-54
A2C65	13	Not Used.	
A2C65	12	CAPACITOR: MIL type 2404X5U0152M.	5-54
A2C66	13	Not Used.	
A2C66	12	CAPACITOR: MIL type 2404X5U0152M.	5-54
A2C67	13	Not Used.	
A2C67	12	CAPACITOR: MIL type 2404X5U0152M.	5-54
A2CP1	13	Not Used.	
A2CP1	12	LOOP, INJECTION: No. 16 AWG tinned and formed copper wire, 0.641 inch wide, 0.750 inch high, 0.391 inch deep; mfr CMC, dwg MP5101298.	5-20
A2CR3		SEMICONDUCTOR DEVICE, DIODE: MIL type 1N3064.	5-20
A2CR8	13	SEMICONDUCTOR DEVICE, DIODE: MIL type 1N3064.	5-54
A2CR8	12	SEMICONDUCTOR DEVICE, DIODE: Same as A1A8CR11.	5-54
A2CR9	13	Not Used.	
A2CR9	12	SEMICONDUCTOR DEVICE, DIODE: Same as A1A8CR11.	5-54

TABLE 6-1A. (Continued)

REF DESIG	NOTES	NAME AND DESCRIPTION	FIG. NO.
A2E6		TERMINAL, STUD: MIL type SE16-X-C-01.	5-52
A2E12		TERMINAL, LUG: Steel, 1-1/2 inches long; mfr CMC, dwg MP4404116.	5-52
A2E13		TERMINAL, LUG: Tinned steel, 0.5 inch long; mfr CMC, dwg MP1250782.	5-52
A2E14		TERMINAL, LUG: Same as A2E13.	5-52
A2E15	13	Not Used.	
A2E15	12	TERMINAL, STUD: Brass, teflon insulator, 0.55 inch long, 0.250 inch dia.; mfr USE, P/N 1471-B.	5-20
A2E16	13	Not Used.	
A2E16	12	TERMINAL, STUD: Same as A2E15 with NOTE 12.	5-54
A2E17	13	Not Used.	
A2E17	12	TERMINAL, STUD: Same as A2E15 with NOTE 12.	5-54
A2E18		TERMINAL, STUD: MIL type SE16-X-C-01.	5-54
A2E19		TERMINAL, STUD: MIL type SE16-X-C-01.	5-54
A2E20		TERMINAL, STUD: MIL type SE16-X-C-01.	5-54
A2E21		TERMINAL, STUD: MIL type SE16-X-C-01.	5-54
A2E22		TERMINAL, STUD: MIL type SE16-X-C-01.	5-54
A2E23		TERMINAL, STUD: MIL type SE16-X-C-01.	5-54
A2E24		TERMINAL, STUD: MIL type SE16-X-C-01.	5-54
A2E25	13	Not Used.	
A2E25	12	TERMINAL, STUD: MIL type SE16-X-C-01.	5-54
A2E26	13	Not Used.	
A2E26	12	TERMINAL, STUD: MIL type SE16-X-C-01.	5-54
A2J1		CONNECTOR, RECEPTACLE, ELECTRICAL: MIL type UG-625C/U.	5-52
A2L3		COIL: Same as A1A9L3.	5-52
A2L4		COIL: Same as A1A9L3.	5-52
A2L5		COIL: Same as A1A9L3.	5-52
A2L6		COIL: Same as A1A9L3.	5-52
A2L19	12	COIL, RADIO FREQUENCY: MIL type LT4K030.	5-54
A2L19	13	COIL: MIL type MS18130-4.	5-54
A2L20	12	COIL: Same as A2L19 with NOTE 12.	5-54
A2L20	13	COIL: MIL type MS18130-4.	5-54
A2L26	13	Not Used.	
A2L26	12	COIL, RADIO FREQUENCY: MIL type MS75008-42.	5-54
A2L27	13	Not Used.	
A2L27	12	COIL, RADIO FREQUENCY: MIL type MS75008-42.	5-54
A2M1		AMMETER: 0 to 500 μadc, round, 1 inch dia.; mfr CMC, dwg MP1250878.	5-52
A2MP6		THUMBSCREW: Listed for reference only.	5-19
A2MP27		SPRING, HELICAL, EXTENSION: Stainless steel, 0.500 inch long inside hooks, 0.168 inch outside diameter; mfr CMC, dwg MP4407024.	5-19
A2MP37		COLLAR, SHAFT: Steel, 0.25 inch long, 0.5 inch outside dia., 0.25 inch inside dia.; mfr CMC, dwg MP1250872.	5-22
A2MP38		WASHER, FLAT: Copper alloy, 0.97 inch outside dia., 0.25 inch inside dia.; mfr CMC, dwg MP5364001.	5-22
A2MP39		WASHER, SPRING: Copper alloy, 0.83 inch outside dia., 0.255 inch inside dia.; mfr ITW, P/N 3732-14-01.	5-22
A2MP40		BRACKET: Listed for reference only.	5-54
A2MP41		COVER: Listed for reference only.	5-55

TABLE 6-1A. (Continued)

REF DESIG	NOTES	NAME AND DESCRIPTION	FIG. NO.
A2P2		CONNECTOR, RECEPTACLE, ELECTRICAL: 15 solder cup contacts for No. 20 AWG wire, molded body; mfr ATL, P/N MS15P-20-SPMP-GDF.	5-51
A2R8		RESISTOR: MIL type RT22C2P202.	5-4
A2R9		RESISTOR: MIL type RC07GF101J.	5-54
A2R13	13	RESISTOR: MIL type RC07GF472J.	5-54
A2R13	12	RESISTOR: MIL type RC07GF222J.	5-54
A2R14		RESISTOR: MIL type RT22C2P202.	5-54
A2R16	13	RESISTOR: MIL type RC07GF471J.	5-54
A2R16	12	RESISTOR: MIL type RC07GF470J.	5-54
A2R22	13	RESISTOR: MIL type RC07GF470J.	5-54
A2R22	12	RESISTOR: MIL type RC07GF360J.	5-54
A2R31	13	RESISTOR: MIL type RC07GF470J.	5-54
A2R31	12	RESISTOR: MIL type RC07GF360J.	5-54
A2R36	13	RESISTOR: MIL type RC07GF680J.	5-54
A2R36	12	RESISTOR: MIL type RC07GF470J.	5-54
A2R38	13	RESISTOR: MIL type RC07GF471J.	5-54
A2R38	12	RESISTOR: MIL type RC07GF121J.	5-54
A2R39	13	RESISTOR: MIL type RC07GF681J.	5-54
A2R39	12	RESISTOR: MIL type RC07GF271J.	5-54
A2R41		RESISTOR: MIL type RC07GF181J.	5-54
A2R42		RESISTOR: MIL type RT22C2P202.	5-19
A2R45	13	Not Used.	
A2R45	12	RESISTOR: MIL type RC07GF101J.	5-52
A2R46	13	RESISTOR: MIL type RV4LAYSA251A.	5-51
A2R46	12	RESISTOR: MIL type RV4LAYSA102A.	5-51
A2R47	13	Not Used.	
A2R47	12	RESISTOR: MIL type RC07GF153J.	5-54
A2R48	13	Not Used.	
A2R48	12	RESISTOR: MIL type RC07GF470J.	5-52
A2R49	13	Not Used.	
A2R49	12	RESISTOR: MIL type RC07GF330J.	5-52
A2R50	13	Not Used.	
A2R50	12	RESISTOR: MIL type RC07GF330J.	5-52
A2TB1		TERMINAL BOARD: Glass epoxy, 1.12 inches long, 0.500 inch wide; mfr CMC, dwg MP1240017.	5-52
A3		OSCILLATOR, RADIO FREQUENCY: MIL type O-1267/USM-207.	5-56
A3MP1		THUMBSCREW: Listed for reference only.	5-55
A3MP2		THUMBSCREW: Listed for reference only.	5-55
A3Q1		TRANSISTOR: MIL type 2N297A.	5-38
A3R2		RESISTOR: MIL type RC07GF101J.	5-57
A3R3	13	RESISTOR: MIL type RL42S561J.	5-57
A3R3	12	RESISTOR: MIL type RL42S431J.	5-57
A3R7		RESISTOR: MIL type RL20AD561J.	5-57
A3R8		RESISTOR: MIL type RL20AD681J.	5-57
A3R11		RESISTOR: MIL type RC07GF561J.	5-57
A3R12		RESISTOR: MIL type RC07GF561J.	5-57
A3R17		RESISTOR: MIL type RC07GF101J.	5-57
A3Y1C1		CAPACITOR: MIL type CS13AF010K.	5-58
A3Y1C2		CAPACITOR, VARIABLE: 1.0 to 28.0 $\mu\mu$fd, 500 vdcw, trimmer type; mfr JFD, P/N VCJ1909.	5-26

TABLE 6-1A. (Continued)

REF DESIG	NOTES	NAME AND DESCRIPTION	FIG. NO.
A3Y1C6		CAPACITOR, FIXED, CERAMIC: 0.01 μfd, ±20%, 200 vdcw; mfr KNG, P/N CK06CW103M.	5-58
A3Y1C11		CAPACITOR: MIL type CS13AF010K.	5-58
A3Y1C13		CAPACITOR: Same as A3Y1C6.	5-27
A3Y1E1		PRINTED-CIRCUIT BOARD: 1.765 inches square, 1/16 inch thick copper plated fiberboard; mfr OVN, P/N PCB-1004.	5-58
A3Y1R16		RESISTOR: MIL type RL07S512G:	5-27
E1		EXTENDER, PRINTED-CIRCUIT BOARD: Mfr CMC, dwg MP06-515.	1-1
W1		CABLE ASSEMBLY, POWER: 7 feet 10 inches ±3 inches between connectors; 3-pin connectors with coupling nut; mfr CMC, dwg MP1330065.	1-1
W1P1		CONNECTOR, PLUG: MIL type MS3106R-14S-7S.	1-1
W2		CABLE ASSEMBLY, RADIO FREQUENCY: 13-3/4 inches, ±1/2 inch from plug to plug; BNC connector type UG-88E/U; push-on panel connector; mfr CMC, dwg MP1350003.	1-1

TABLE 6-1. MAINTENANCE PARTS LIST

REF DESIG	NOTES	NAME AND DESCRIPTION	FIG. NO.
A1		COUNTER, ELECTRONIC, DIGITAL READOUT: MIL type CP-814/USM-207.	5-35
A1A1		REGULATOR, VOLTAGE: Printed circuit board w/all components assembled for operation; mfr CMC, dwg MP22-524L6.	5-38
A1A1C1		CAPACITOR: MIL type CS13AC121K.	5-38
A1A1C2		CAPACITOR: MIL type CK62AW822M.	5-38
A1A1C3		CAPACITOR: MIL type CM05D471J03.	5-38
A1A1C4		Not Used.	
A1A1C5		CAPACITOR: Same as A1A1C2.	5-38
A1A1C6		CAPACITOR: MIL type CS13AD3R3K.	5-38
A1A1C7		CAPACITOR: MIL type CS13AF220K.	5-38
A1A1CR1		SEMICONDUCTOR DEVICE, DIODE: MIL type 1N3190.	5-38
A1A1CR2 to A1A1CR4		Not Used.	
A1A1CR5		SEMICONDUCTOR DEVICE, DIODE: MIL type 1N3189.	5-38
A1A1CR6		SEMICONDUCTOR DEVICE, DIODE: Same as A1A1CR5.	5-38
A1A1CR7		SEMICONDUCTOR DEVICE, DIODE: Same as A1A1CR5.	5-38
A1A1CR8		SEMICONDUCTOR DEVICE, DIODE: Same as A1A1CR5.	5-38
A1A1CR9		SEMICONDUCTOR DEVICE, DIODE: Same as A1A1CR5.	5-38
A1A1CR10		SEMICONDUCTOR DEVICE, DIODE: Same as A1A1CR5.	5-38
A1A1CR11		SEMICONDUCTOR DEVICE, DIODE: Same as A1A1CR5.	5-38
A1A1CR12		SEMICONDUCTOR DEVICE, DIODE: Same as A1A1CR5.	5-38
A1A1CR13		SEMICONDUCTOR DEVICE, DIODE: MIL type 1N755A.	5-38
A1A1CR14		SEMICONDUCTOR DEVICE, DIODE: MIL type 1N752A.	5-38
A1A1CR15		SEMICONDUCTOR DEVICE, DIODE: MIL type 1N483B.	5-38
A1A1CR16		SEMICONDUCTOR DEVICE, DIODE: Same as A1A1CR15.	5-38
A1A1E1		TERMINAL, STUD, TP1: MIL type MP55155/12-4.	5-38
A1A1E2		TERMINAL, STUD, TP2: Same as A1A1E1.	5-38
A1A1E3		TERMINAL, STUD, TP3: Same as A1A1E1.	5-38
A1A1E4		TERMINAL, STUD, TP4: Same as A1A1E1.	5-38
A1A1E5		TERMINAL, STUD, TP5: Same as A1A1E1.	5-38
A1A1E6		TERMINAL, STUD, TP6: Same as A1A1E1.	5-38
A1A1E7		TERMINAL, STUD: Same as A1A1E1.	5-38
A1A1MP1		WASHER, NON-METALLIC: Nylon, 0.250 inch outside dia., 0.110 inch inside dia.; mfr HHS, P/N 2661.	5-38
A1A1MP2		WASHER, NON-METALLIC: Same as A1A1MP1.	5-38
A1A1MP3		WASHER, NON-METALLIC: Same as A1A1MP1.	5-38
A1A1MP4		WASHER, NON-METALLIC: Same as A1A1MP1.	5-38
A1A1MP5		WASHER, NON-METALLIC: Same as A1A1MP1.	5-38
A1A1MP6		WASHER, NON-METALLIC: Same as A1A1MP1.	5-38
A1A1Q1		TRANSISTOR: MIL type 2N297A.	5-38
A1A1Q2		TRANSISTOR: MIL type 2N697.	5-38
A1A1Q3		TRANSISTOR: Same as A1A1Q2.	5-38
A1A1Q4		TRANSISTOR: MIL type 2N1304.	5-38
A1A1Q5		TRANSISTOR: Same as A1A1Q1.	5-38
A1A1Q6		TRANSISTOR: Same as A1A1Q2.	5-38
A1A1Q7		TRANSISTOR: Same as A1A1Q1.	5-38
A1A1Q8		TRANSISTOR: MIL type 2N404.	5-38
A1A1R1		RESISTOR: MIL type RL42AD101J.	5-38
A1A1R2		RESISTOR: MIL type RL32AD104J.	5-38
A1A1R3		RESISTOR: MIL type RL32AD510J.	5-38
A1A1R4		RESISTOR: MIL type RL42AD150J.	5-38
A1A1R5		RESISTOR: Same as A1A1R1.	5-38
A1A1R6		RESISTOR: MIL type RC07GF102J.	5-38
A1A1R7		RESISTOR: MIL type RC07GF122J.	5-38
A1A1R8		RESISTOR: MIL type RJ22BP501.	5-38

TABLE 6-1. (Continued)

REF DESIG	NOTES	NAME AND DESCRIPTION	FIG. NO.
A1A1R9		RESISTOR: MIL type RC07GF331J.	5-38
A1A1R10		RESISTOR: Same as A1A1R9.	5-38
A1A1R11		RESISTOR: MIL type RN60D4220F.	5-38
A1A1R12		RESISTOR: MIL type RN60D442F.	5-38
A1A1R13		RESISTOR: Same as A1A1R6.	5-38
A1A1R14		RESISTOR: MIL type RC07GF681J.	5-38
A1A1R15		RESISTOR: MIL type RW69V1R5.	5-38
A1A1R16		RESISTOR: MIL type RC076F152J.	5-38
A1A1R17		RESISTOR: Same as A1A1R9.	5-38
A1A1R18		RESISTOR: MIL type RN60D1151F.	5-38
A1A1R19		RESISTOR: MIL type RN60D1211F.	5-38
A1A1R20		RESISTOR: MIL type RC07GF390J.	5-38
A1A1R21		RESISTOR: Same as A1A1R6.	5-38
A1A1R22		RESISTOR: MIL type RC07GF222J.	5-38
A1A2		FREQUENCY DIVIDER: Printed circuit board w/all components assembled for operation; mfr CMC, dwg MP90-563L2.	5-39
A1A2C1		CAPACITOR: MIL type CM05D121J03.	5-39
A1A2C2		CAPACITOR: Same as A1A2C1.	5-39
A1A2C3		CAPACITOR: MIL type CM05D271J03.	5-39
A1A2C4		CAPACITOR: Same as A1A2C3.	5-39
A1A2C5		CAPACITOR: Same as A1A2C1.	5-39
A1A2C6		CAPACITOR: Same as A1A2C1.	5-39
A1A2C7		CAPACITOR: Same as A1A2C3.	5-39
A1A2C8		CAPACITOR: Same as A1A2C3.	5-39
A1A2C9		CAPACITOR: Same as A1A2C1.	5-39
A1A2C10		CAPACITOR: Same as A1A2C1.	5-39
A1A2C11		CAPACITOR: Same as A1A2C3.	5-39
A1A2C12		CAPACITOR: Same as A1A2C3.	5-39
A1A2C13		CAPACITOR: Same as A1A2C1.	5-39
A1A2C14		CAPACITOR: Same as A1A2C1.	5-39
A1A2C15		CAPACITOR: Same as A1A2C3.	5-39
A1A2C16		CAPACITOR: Same as A1A2C3.	5-39
A1A2C17		CAPACITOR: Same as A1A1C2.	5-39
A1A2C18		CAPACITOR: Same as A1A1C2.	5-39
A1A2C19		CAPACITOR: Same as A1A2C1.	5-39
A1A2C20		CAPACITOR: Same as A1A2C1.	5-39
A1A2C21		CAPACITOR: Same as A1A2C3.	5-39
A1A2C22		CAPACITOR: Same as A1A2C3.	5-39
A1A2C23		CAPACITOR: Same as A1A2C1.	5-39
A1A2C24		CAPACITOR: Same as A1A2C1.	5-39
A1A2C25		CAPACITOR: Same as A1A2C3.	5-39
A1A2C26		CAPACITOR: Same as A1A2C3.	5-39
A1A2C27		CAPACITOR: Same as A1A2C1.	5-39
A1A2C28		CAPACITOR: Same as A1A2C1.	5-39
A1A2C29		CAPACITOR: Same as A1A2C3.	5-39
A1A2C30		CAPACITOR: Same as A1A2C3.	5-39
A1A2C31		CAPACITOR: Same as A1A2C1.	5-39
A1A2C32		CAPACITOR: Same as A1A2C1.	5-39
A1A2C33		CAPACITOR: Same as A1A2C3.	5-39
A1A2C34		CAPACITOR: Same as A1A2C3.	5-39
A1A2CR1		SEMICONDUCTOR DEVICE, DIODE: MIL type 1N276.	5-39
A1A2CR2		SEMICONDUCTOR DEVICE, DIODE: Same as A1A2CR1.	5-39
A1A2CR3		SEMICONDUCTOR DEVICE, DIODE: Same as A1A2CR1.	5-39
A1A2CR4		SEMICONDUCTOR DEVICE, DIODE: Same as A1A2CR1.	5-39
A1A2CR5		SEMICONDUCTOR DEVICE, DIODE: Same as A1A2CR1.	5-39
A1A2CR6		SEMICONDUCTOR DEVICE, DIODE: Same as A1A2CR1.	5-39
A1A2CR7		SEMICONDUCTOR DEVICE, DIODE: Same as A1A2CR1.	5-39

TABLE 6-1. (Continued)

REF DESIG	NOTES	NAME AND DESCRIPTION	FIG. NO.
A1A2CR8		SEMICONDUCTOR DEVICE, DIODE: Same as A1A2CR1.	5-39
A1A2CR9		SEMICONDUCTOR DEVICE, DIODE: Same as A1A2CR1.	5-39
A1A2CR10		SEMICONDUCTOR DEVICE, DIODE: Same as A1A2CR1.	5-39
A1A2CR11		SEMICONDUCTOR DEVICE, DIODE: Same as A1A2CR1.	5-39
A1A2CR12		SEMICONDUCTOR DEVICE, DIODE: Same as A1A2CR1.	5-39
A1A2CR13		SEMICONDUCTOR DEVICE, DIODE: Same as A1A2CR1.	5-39
A1A2CR14		SEMICONDUCTOR DEVICE, DIODE: Same as A1A2CR1.	5-39
A1A2CR15		SEMICONDUCTOR DEVICE, DIODE: Same as A1A2CR1.	5-39
A1A2CR16		SEMICONDUCTOR DEVICE, DIODE: Same as A1A2CR1.	5-39
A1A2CR17		SEMICONDUCTOR DEVICE, DIODE: Same as A1A2CR1.	5-39
A1A2CR18		SEMICONDUCTOR DEVICE, DIODE: Same as A1A2CR1.	5-39
A1A2CR19		SEMICONDUCTOR DEVICE, DIODE: Same as A1A2CR1.	5-39
A1A2CR20		SEMICONDUCTOR DEVICE, DIODE: Same as A1A2CR1.	5-39
A1A2CR21		SEMICONDUCTOR DEVICE, DIODE: Same as A1A2CR1.	5-39
A1A2CR22		SEMICONDUCTOR DEVICE, DIODE: Same as A1A2CR1.	5-39
A1A2CR23		SEMICONDUCTOR DEVICE, DIODE: Same as A1A2CR1.	5-39
A1A2CR24		SEMICONDUCTOR DEVICE, DIODE: Same as A1A2CR1.	5-39
A1A2E1		TERMINAL, STUD, TP1: Same as A1A1E1.	5-39
A1A2E2		TERMINAL, STUD, TP2: Same as A1A1E1.	5-39
A1A2E3		TERMINAL, STUD, TP3: Same as A1A1E1.	5-39
A1A2Q1		TRANSISTOR: Same as A1A1Q4.	5-39
A1A2Q2		TRANSISTOR: Same as A1A1Q4.	5-39
A1A2Q3		TRANSISTOR: Same as A1A1Q4.	5-39
A1A2Q4		TRANSISTOR: Same as A1A1Q4.	5-39
A1A2Q5		TRANSISTOR: Same as A1A1Q4.	5-39
A1A2Q6		TRANSISTOR: Same as A1A1Q4.	5-39
A1A2Q7		TRANSISTOR: Same as A1A1Q4.	5-39
A1A2Q8		TRANSISTOR: Same as A1A1Q4.	5-39
A1A2Q9		TRANSISTOR: Same as A1A1Q8.	5-39
A1A2Q10		TRANSISTOR: Same as A1A1Q4.	5-39
A1A2Q11		TRANSISTOR: Same as A1A1Q4.	5-39
A1A2Q12		TRANSISTOR: Same as A1A1Q4.	5-39
A1A2Q13		TRANSISTOR: Same as A1A1Q4.	5-39
A1A2Q14		TRANSISTOR: Same as A1A1Q4.	5-39
A1A2Q15		TRANSISTOR: Same as A1A1Q4.	5-39
A1A2Q16		TRANSISTOR: Same as A1A1Q4.	5-39
A1A2Q17		TRANSISTOR: Same as A1A1Q4.	5-39
A1A2Q18		TRANSISTOR: Same as A1A1Q4.	5-39
A1A2Q19		TRANSISTOR: Same as A1A1Q4.	5-39
A1A2Q20		TRANSISTOR: Same as A1A1Q4.	5-39
A1A2Q21		TRANSISTOR: Same as A1A1Q8.	5-39
A1A2Q22		TRANSISTOR: Same as A1A1Q4.	5-39
A1A2R1		RESISTOR: MIL type RC07GF472J.	5-39
A1A2R2		RESISTOR: Same as A1A1R6.	5-39
A1A2R3		RESISTOR: MIL type RC07GF682J.	5-39
A1A2R4		RESISTOR: MIL type RC07GF103J.	5-39
A1A2R5		RESISTOR: Same as A1A1R22.	5-39
A1A2R6		RESISTOR: MIL type RC07GF333J.	5-39
A1A2R7		RESISTOR: Same as A1A2R6.	5-39
A1A2R8		RESISTOR: Same as A1A1R22.	5-39
A1A2R9		RESISTOR: Same as A1A2R4.	5-39
A1A2R10		RESISTOR: Same as A1A1R6.	5-39
A1A2R11		RESISTOR: Same as A1A2R3.	5-39
A1A2R12		RESISTOR: MIL type RC07GF182J.	5-39
A1A2R13		RESISTOR: Same as A1A1R6.	5-39
A1A2R14		RESISTOR: Same as A1A2R4.	5-39
A1A2R15		RESISTOR: Same as A1A2R4.	5-39

TABLE 6-1. (Continued)

REF DESIG	NOTES	NAME AND DESCRIPTION	FIG. NO.
A1A2R16		RESISTOR: Same as A1A2R6.	5-39
A1A2R17		RESISTOR: Same as A1A2R6.	5-39
A1A2R18		RESISTOR: MIL type RC07GF123J.	5-39
A1A2R19		RESISTOR: Same as A1A2R4.	5-39
A1A2R20		RESISTOR: Same as A1A1R6.	5-39
A1A2R21		RESISTOR: Same as A1A2R4.	5-39
A1A2R22		RESISTOR: MIL type RC07GF562J.	5-39
A1A2R23		RESISTOR: Same as A1A1R6.	5-39
A1A2R24		RESISTOR: Same as A1A2R4.	5-39
A1A2R25		RESISTOR: Same as A1A2R4.	5-39
A1A2R26		RESISTOR: Same as A1A2R6.	5-39
A1A2R27		RESISTOR: Same as A1A2R6.	5-39
A1A2R28		RESISTOR: Same as A1A2R18.	5-39
A1A2R29		RESISTOR: Same as A1A2R4.	5-39
A1A2R30		RESISTOR: Same as A1A1R6.	5-39
A1A2R31		RESISTOR: Same as A1A2R4.	5-39
A1A2R32		RESISTOR: Same as A1A1R6.	5-39
A1A2R33		RESISTOR: Same as A1A2R4.	5-39
A1A2R34		RESISTOR: Same as A1A2R4.	5-39
A1A2R35		RESISTOR: Same as A1A2R18.	5-39
A1A2R36		RESISTOR: Same as A1A2R6.	5-39
A1A2R37		RESISTOR: Same as A1A2R6.	5-39
A1A2R38		RESISTOR: Same as A1A2R4.	5-39
A1A2R39		RESISTOR: Same as A1A1R6.	5-39
A1A2R40		RESISTOR: Same as A1A2R4.	5-39
A1A2R41		RESISTOR: Same as A1A2R6.	5-39
A1A2R42		RESISTOR: MIL type RC07GF563J.	5-39
A1A2R43		RESISTOR: Same as A1A2R1.	5-39
A1A2R44		RESISTOR: MIL type RC07GF822J.	5-39
A1A2R45		RESISTOR: MIL type RC07GF153J.	5-39
A1A2R46		RESISTOR: Same as A1A2R42.	5-39
A1A2R47		RESISTOR: Same as A1A2R42.	5-39
A1A2R48		RESISTOR: Same as A1A2R44.	5-39
A1A2R49		RESISTOR: Same as A1A2R44.	5-39
A1A2R50		RESISTOR: Same as A1A1R6.	5-39
A1A2R51		RESISTOR: Same as A1A2R3.	5-39
A1A2R52		RESISTOR: Same as A1A2R4.	5-39
A1A2R53		RESISTOR: Same as A1A2R6.	5-39
A1A2R54		RESISTOR: Same as A1A2R6.	5-39
A1A2R55		RESISTOR: Same as A1A2R18.	5-39
A1A2R56		RESISTOR: Same as A1A2R4.	5-39
A1A2R57		RESISTOR: Same as A1A1R6.	5-39
A1A2R58		RESISTOR: Same as A1A2R3.	5-39
A1A2R59		RESISTOR: Same as A1A2R12.	5-39
A1A2R60		RESISTOR: Same as A1A1R6.	5-39
A1A2R61		RESISTOR: Same as A1A2R4.	5-39
A1A2R62		RESISTOR: Same as A1A2R4.	5-39
A1A2R63		RESISTOR: Same as A1A2R18.	5-39
A1A2R64		RESISTOR: Same as A1A2R6.	5-39
A1A2R65		RESISTOR: Same as A1A2R6.	5-39
A1A2R66		RESISTOR: Same as A1A2R4.	5-39
A1A2R67		RESISTOR: Same as A1A1R6.	5-39
A1A2R68		RESISTOR: Same as A1A2R4.	5-39
A1A2R69		RESISTOR: Same as A1A2R22.	5-39
A1A2R70		RESISTOR: Same as A1A1R6.	5-39
A1A2R71		RESISTOR: Same as A1A2R4.	5-39
A1A2R72		RESISTOR: Same as A1A2R4.	5-39

TABLE 6-1. (Continued)

REF DESIG	NOTES	NAME AND DESCRIPTION	FIG. NO.
A1A2R73		RESISTOR: Same as A1A2R18.	5-39
A1A2R74		RESISTOR: Same as A1A2R6.	5-39
A1A2R75		RESISTOR: Same as A1A2R6.	5-39
A1A2R76		RESISTOR: Same as A1A2R4.	5-39
A1A2R77		RESISTOR: Same as A1A1R6.	5-39
A1A2R78		RESISTOR: Same as A1A2R4.	5-39
A1A2R79		RESISTOR: Same as A1A2R4.	5-39
A1A2R80		RESISTOR: Same as A1A2R1.	5-39
A1A2R81		RESISTOR: Same as A1A1R6.	5-39
A1A2R82		RESISTOR: Same as A1A2R4.	5-39
A1A2R83		RESISTOR: Same as A1A2R6.	5-39
A1A2R84		RESISTOR: Same as A1A2R6.	5-39
A1A2R85		RESISTOR: Same as A1A2R18.	5-39
A1A2R86		RESISTOR: Same as A1A2R4.	5-39
A1A2R87		RESISTOR: Same as A1A1R6.	5-39
A1A2R88		RESISTOR: Same as A1A2R4.	5-39
A1A2R89		RESISTOR: Same as A1A2R1.	5-39
A1A2R90		RESISTOR: Same as A1A2R44.	5-39
A1A2R91		RESISTOR: Same as A1A2R45.	5-39
A1A2R92		RESISTOR: Same as A1A2R6.	5-39
A1A2R93		RESISTOR: Same as A1A2R42.	5-39
A1A3		FREQUENCY DIVIDER: Same as A1A2.	5-39
A1A3C1		CAPACITOR: Same as A1A2C1.	5-39
A1A3C2		CAPACITOR: Same as A1A2C1.	5-39
A1A3C3		CAPACITOR: Same as A1A2C3.	5-39
A1A3C4		CAPACITOR: Same as A1A2C3.	5-39
A1A3C5		CAPACITOR: Same as A1A2C1.	5-39
A1A3C6		CAPACITOR: Same as A1A2C1.	5-39
A1A3C7		CAPACITOR: Same as A1A2C3.	5-39
A1A3C8		CAPACITOR: Same as A1A2C3.	5-39
A1A3C9		CAPACITOR: Same as A1A2C1.	5-39
A1A3C10		CAPACITOR: Same as A1A2C1.	5-39
A1A3C11		CAPACITOR: Same as A1A2C3.	5-39
A1A3C12		CAPACITOR: Same as A1A2C3.	5-39
A1A3C13		CAPACITOR: Same as A1A2C1.	5-39
A1A3C14		CAPACITOR: Same as A1A2C1.	5-39
A1A3C15		CAPACITOR: Same as A1A2C3.	5-39
A1A3C16		CAPACITOR: Same as A1A2C3.	5-39
A1A3C17		CAPACITOR: Same as A1A1C2.	5-39
A1A3C18		CAPACITOR: Same as A1A1C2.	5-39
A1A3C19		CAPACITOR: Same as A1A2C1.	5-39
A1A3C20		CAPACITOR: Same as A1A2C1.	5-39
A1A3C21		CAPACITOR: Same as A1A2C3.	5-39
A1A3C22		CAPACITOR: Same as A1A2C3.	5-39
A1A3C23		CAPACITOR: Same as A1A2C1.	5-39
A1A3C24		CAPACITOR: Same as A1A2C1.	5-39
A1A3C25		CAPACITOR: Same as A1A2C3.	5-39
A1A3C26		CAPACITOR: Same as A1A2C3.	5-39
A1A3C27		CAPACITOR: Same as A1A2C1.	5-39
A1A3C28		CAPACITOR: Same as A1A2C1.	5-39
A1A3C29		CAPACITOR: Same as A1A2C3.	5-39
A1A3C30		CAPACITOR: Same as A1A2C3.	5-39
A1A3C31		CAPACITOR: Same as A1A2C1.	5-39
A1A3C32		CAPACITOR: Same as A1A2C1.	5-39
A1A3C33		CAPACITOR: Same as A1A2C3.	5-39
A1A3C34		CAPACITOR: Same as A1A2C3.	5-39
A1A3CR1		SEMICONDUCTOR DEVICE, DIODE: Same as A1A2CR1.	5-39

TABLE 6-1. (Continued)

REF DESIG	NOTES	NAME AND DESCRIPTION	FIG. NO.
A1A3CR2		SEMICONDUCTOR DEVICE, DIODE: Same as A1A2CR1.	5-39
A1A3CR3		SEMICONDUCTOR DEVICE, DIODE: Same as A1A2CR1.	5-39
A1A3CR4		SEMICONDUCTOR DEVICE, DIODE: Same as A1A2CR1.	5-39
A1A3CR5		SEMICONDUCTOR DEVICE, DIODE: Same as A1A2CR1.	5-39
A1A3CR6		SEMICONDUCTOR DEVICE, DIODE: Same as A1A2CR1.	5-39
A1A3CR7		SEMICONDUCTOR DEVICE, DIODE: Same as A1A2CR1.	5-39
A1A3CR8		SEMICONDUCTOR DEVICE, DIODE: Same as A1A2CR1.	5-39
A1A3CR9		SEMICONDUCTOR DEVICE, DIODE: Same as A1A2CR1.	5-39
A1A3CR10		SEMICONDUCTOR DEVICE, DIODE: Same as A1A2CR1.	5-39
A1A3CR11		SEMICONDUCTOR DEVICE, DIODE: Same as A1A2CR1.	5-39
A1A3CR12		SEMICONDUCTOR DEVICE, DIODE: Same as A1A2CR1.	5-39
A1A3CR13		SEMICONDUCTOR DEVICE, DIODE: Same as A1A2CR1.	5-39
A1A3CR14		SEMICONDUCTOR DEVICE, DIODE: Same as A1A2CR1.	5-39
A1A3CR15		SEMICONDUCTOR DEVICE, DIODE: Same as A1A2CR1.	5-39
A1A3CR16		SEMICONDUCTOR DEVICE, DIODE: Same as A1A2CR1.	5-39
A1A3CR17		SEMICONDUCTOR DEVICE, DIODE: Same as A1A2CR1.	5-39
A1A3CR18		SEMICONDUCTOR DEVICE, DIODE: Same as A1A2CR1.	5-39
A1A3CR19		SEMICONDUCTOR DEVICE, DIODE: Same as A1A2CR1.	5-39
A1A3CR20		SEMICONDUCTOR DEVICE, DIODE: Same as A1A2CR1.	5-39
A1A3CR21		SEMICONDUCTOR DEVICE, DIODE: Same as A1A2CR1.	5-39
A1A3CR22		SEMICONDUCTOR DEVICE, DIODE: Same as A1A2CR1.	5-39
A1A3CR23		SEMICONDUCTOR DEVICE, DIODE: Same as A1A2CR1.	5-39
A1A3CR24		SEMICONDUCTOR DEVICE, DIODE: Same as A1A2CR1.	5-39
A1A3E1		TERMINAL, STUD, TP1: Same as A1A1E1.	5-39
A1A3E2		TERMINAL, STUD, TP2: Same as A1A1E1.	5-39
A1A3E3		TERMINAL, STUD, TP3: Same as A1A1E1.	5-39
A1A3Q1		TRANSISTOR: Same as A1A1Q4.	5-39
A1A3Q2		TRANSISTOR: Same as A1A1Q4.	5-39
A1A3Q3		TRANSISTOR: Same as A1A1Q4.	5-39
A1A3Q4		TRANSISTOR: Same as A1A1Q4.	5-39
A1A3Q5		TRANSISTOR: Same as A1A1Q4.	5-39
A1A3Q6		TRANSISTOR: Same as A1A1Q4.	5-39
A1A3Q7		TRANSISTOR: Same as A1A1Q4.	5-39
A1A3Q8		TRANSISTOR: Same as A1A1Q4.	5-39
A1A3Q9		TRANSISTOR: Same as A1A1Q8.	5-39
A1A3Q10		TRANSISTOR: Same as A1A1Q4.	5-39
A1A3Q11		TRANSISTOR: Same as A1A1Q4.	5-39
A1A3Q12		TRANSISTOR: Same as A1A1Q4.	5-39
A1A3Q13		TRANSISTOR: Same as A1A1Q4.	5-39
A1A3Q14		TRANSISTOR: Same as A1A1Q4.	5-39
A1A3Q15		TRANSISTOR: Same as A1A1Q4.	5-39
A1A3Q16		TRANSISTOR: Same as A1A1Q4.	5-39
A1A3Q17		TRANSISTOR: Same as A1A1Q4.	5-39
A1A3Q18		TRANSISTOR: Same as A1A1Q4.	5-39
A1A3Q19		TRANSISTOR: Same as A1A1Q4.	5-39
A1A3Q20		TRANSISTOR: Same as A1A1Q4.	5-39
A1A3Q21		TRANSISTOR: Same as A1A1Q8.	5-39
A1A3Q22		TRANSISTOR: Same as A1A1Q4.	5-39
A1A3R1		RESISTOR: Same as A1A2R1.	5-39
A1A3R2		RESISTOR: Same as A1A1R6.	5-39
A1A3R3		RESISTOR: Same as A1A2R3.	5-39
A1A3R4		RESISTOR: Same as A1A2R4.	5-39
A1A3R5		RESISTOR: Same as A1A1R22.	5-39
A1A3R6		RESISTOR: Same as A1A2R6.	5-39
A1A3R7		RESISTOR: Same as A1A2R6.	5-39
A1A3R8		RESISTOR: Same as A1A1R22.	5-39
A1A3R9		RESISTOR: Same as A1A2R4.	5-39

TABLE 6-1. (Continued)

REF DESIG	NOTES	NAME AND DESCRIPTION	FIG. NO.
A1A3R10		RESISTOR: Same as A1A1R6.	5-39
A1A3R11		RESISTOR: Same as A1A2R3.	5-39
A1A3R12		RESISTOR: Same as A1A2R12.	5-39
A1A3R13		RESISTOR: Same as A1A1R6.	5-39
A1E3R14		RESISTOR: Same as A1A2R4.	5-39
A1A3R15		RESISTOR: Same as A1A2R4.	5-39
A1A3R16		RESISTOR: Same as A1A2R6.	5-39
A1A3R17		RESISTOR: Same as A1A2R6.	5-39
A1A3R18		RESISTOR: Same as A1A2R18.	5-39
A1A3R19		RESISTOR: Same as A1A2R4.	5-39
A1A3R20		RESISTOR: Same as A1A1R6.	5-39
A1A3R21		RESISTOR: Same as A1A2R4.	5-39
A1A3R22		RESISTOR: Same as A1A2R22.	5-39
A1A3R23		RESISTOR: Same as A1A1R6.	5-39
A1A3R24		RESISTOR: Same as A1A2R4.	5-39
A1A3R25		RESISTOR: Same as A1A2R4.	5-39
A1A3R26		RESISTOR: Same as A1A2R6.	5-39
A1A3R27		RESISTOR: Same as A1A2R6.	5-39
A1A3R28		RESISTOR: Same as A1A2R18.	5-39
A1A3R29		RESISTOR: Same as A1A2R4.	5-39
A1A3R30		RESISTOR: Same as A1A1R6.	5-39
A1A3R31		RESISTOR: Same as A1A2R4.	5-39
A1A3R32		RESISTOR: Same as A1A1R6.	5-39
A1A3R33		RESISTOR: Same as A1A2R4.	5-39
A1A3R34		RESISTOR: Same as A1A2R4.	5-39
A1A3R35		RESISTOR: Same as A1A2R18.	5-39
A1A3R36		RESISTOR: Same as A1A2R6.	5-39
A1A3R37		RESISTOR: Same as A1A2R6.	5-39
A1A3R38		RESISTOR: Same as A1A2R4.	5-39
A1A3R39		RESISTOR: Same as A1A1R6.	5-39
A1A3R40		RESISTOR: Same as A1A2R4.	5-39
A1A3R41		RESISTOR: Same as A1A2R6.	5-39
A1A3R42		RESISTOR: Same as A1A2R42.	5-39
A1A3R43		RESISTOR: Same as A1A2R1.	5-39
A1A3R44		RESISTOR: Same as A1A2R44.	5-39
A1A3R45		RESISTOR: Same as A1A2R45.	5-39
A1A3R46		RESISTOR: Same as A1A2R42.	5-39
A1A3R47		RESISTOR: Same as A1A2R42.	5-39
A1A3R48		RESISTOR: Same as A1A2R44.	5-39
A1A3R49		RESISTOR: Same as A1A2R44.	5-39
A1A3R50		RESISTOR: Same as A1A1R6.	5-39
A1A3R51		RESISTOR: Same as A1A2R3.	5-39
A1A3R52		RESISTOR: Same as A1A2R4.	5-39
A1A3R53		RESISTOR: Same as A1A2R6.	5-39
A1A3R54		RESISTOR: Same as A1A2R6.	5-39
A1A3R55		RESISTOR: Same as A1A2R18.	5-39
A1A3R56		RESISTOR: Same as A1A2R4.	5-39
A1A3R57		RESISTOR: Same as A1A1R6.	5-39
A1A3R58		RESISTOR: Same as A1A2R3.	5-39
A1A3R59		RESISTOR: Same as A1A2R12.	5-39
A1A3R60		RESISTOR: Same as A1A1R6.	5-39
A1A3R61		RESISTOR: Same as A1A2R4.	5-39
A1A3R62		RESISTOR: Same as A1A2R4.	5-39
A1A3R63		RESISTOR: Same as A1A2R18.	5-39
A1A3R64		RESISTOR: Same as A1A2R6.	5-39
A1A3R65		RESISTOR: Same as A1A2R6.	5-39
A1A3R66		RESISTOR: Same as A1A2R4.	5-39

TABLE 6-1. (Continued)

REF DESIG	NOTES	NAME AND DESCRIPTION	FIG. NO.
A1A3R67		RESISTOR: Same as A1A1R6.	5-39
A1A3R68		RESISTOR: Same as A1A2R4.	5-39
A1A3R69		RESISTOR: Same as A1A2R22.	5-39
A1A3R70		RESISTOR: Same as A1A1R6.	5-39
A1A3R71		RESISTOR: Same as A1A2R4.	5-39
A1A3R72		RESISTOR: Same as A1A2R4.	5-39
A1A3R73		RESISTOR: Same as A1A2R18.	5-39
A1A3R74		RESISTOR: Same as A1A2R6.	5-39
A1A3R75		RESISTOR: Same as A1A2R6.	5-39
A1A3R76		RESISTOR: Same as A1A2R4.	5-39
A1A3R77		RESISTOR: Same as A1A1R6.	5-39
A1A3R78		RESISTOR: Same as A1A2R4.	5-39
A1A3R79		RESISTOR: Same as A1A2R4.	5-39
A1A3R80		RESISTOR: Same as A1A2R1.	5-39
A1A3R81		RESISTOR: Same as A1A1R6.	5-39
A1A3R82		RESISTOR: Same as A1A2R4.	5-39
A1A3R83		RESISTOR: Same as A1A2R6.	5-39
A1A3R84		RESISTOR: Same as A1A2R6.	5-39
A1A3R85		RESISTOR: Same as A1A2R18.	5-39
A1A3R86		RESISTOR: Same as A1A2R4.	5-39
A1A3R87		RESISTOR: Same as A1A1R6.	5-39
A1A3R88		RESISTOR: Same as A1A2R4.	5-39
A1A3R89		RESISTOR: Same as A1A2R1.	5-39
A1A3R90		RESISTOR: Same as A1A2R44.	5-39
A1A3R91		RESISTOR: Same as A1A2R45.	5-39
A1A3R92		RESISTOR: Same as A1A2R6.	5-39
A1A3R93		RESISTOR: Same as A1A2R42.	5-39
A1A4		FREQUENCY DIVIDER: Same as A1A2.	5-39
A1A4C1		CAPACITOR: Same as A1A2C1.	5-39
A1A4C2		CAPACITOR: Same as A1A2C1.	5-39
A1A4C3		CAPACITOR: Same as A1A2C3.	5-39
A1A4C4		CAPACITOR: Same as A1A2C3.	5-39
A1A4C5		CAPACITOR: Same as A1A2C1.	5-39
A1A4C6		CAPACITOR: Same as A1A2C1.	5-39
A1A4C7		CAPACITOR: Same as A1A2C3.	5-39
A1A4C8		CAPACITOR: Same as A1A2C3.	5-39
A1A4C9		CAPACITOR: Same as A1A2C1.	5-39
A1A4C10		CAPACITOR: Same as A1A2C1.	5-39
A1A4C11		CAPACITOR: Same as A1A2C3.	5-39
A1A4C12		CAPACITOR: Same as A1A2C3.	5-39
A1A4C13		CAPACITOR: Same as A1A2C1.	5-39
A1A4C14		CAPACITOR: Same as A1A2C1.	5-39
A1A4C15		CAPACITOR: Same as A1A2C3.	5-39
A1A4C16		CAPACITOR: Same as A1A2C3.	5-39
A1A4C17		CAPACITOR: Same as A1A1C2.	5-39
A1A4C18		CAPACITOR: Same as A1A1C2.	5-39
A1A4C19		CAPACITOR: Same as A1A2C1.	5-39
A1A4C20		CAPACITOR: Same as A1A2C1.	5-39
A1A4C21		CAPACITOR: Same as A1A2C3.	5-39
A1A4C22		CAPACITOR: Same as A1A2C3.	5-39
A1A4C23		CAPACITOR: Same as A1A2C1.	5-39
A1A4C24		CAPACITOR: Same as A1A2C1.	5-39
A1A4C25		CAPACITOR: Same as A1A2C3.	5-39
A1A4C26		CAPACITOR: Same as A1A2C3.	5-39
A1A4C27		CAPACITOR: Same as A1A2C1.	5-39
A1A4C28		CAPACITOR: Same as A1A2C1.	5-39
A1A4C29		CAPACITOR: Same as A1A2C3.	5-39

TABLE 6-1. (Continued)

REF DESIG	NOTES	NAME AND DESCRIPTION	FIG. NO.
A1A4C30		CAPACITOR: Same as A1A2C3.	5-39
A1A4C31		CAPACITOR: Same as A1A2C1.	5-39
A1A4C32		CAPACITOR: Same as A1A2C1.	5-39
A1A4C33		CAPACITOR: Same as A1A2C3.	5-39
A1A4C34		CAPACITOR: Same as A1A2C3.	5-39
A1A4CR1		SEMICONDUCTOR DEVICE, DIODE: Same as A1A2CR1.	5-39
A1A4CR2		SEMICONDUCTOR DEVICE, DIODE: Same as A1A2CR1.	5-39
A1A4CR3		SEMICONDUCTOR DEVICE, DIODE: Same as A1A2CR1.	5-39
A1A4CR4		SEMICONDUCTOR DEVICE, DIODE: Same as A1A2CR1.	5-39
A1A4CR5		SEMICONDUCTOR DEVICE, DIODE: Same as A1A2CR1.	5-39
A1A4CR6		SEMICONDUCTOR DEVICE, DIODE: Same as A1A2CR1.	5-39
A1A4CR7		SEMICONDUCTOR DEVICE, DIODE: Same as A1A2CR1.	5-39
A1A4CR8		SEMICONDUCTOR DEVICE, DIODE: Same as A1A2CR1.	5-39
A1A4CR9		SEMICONDUCTOR DEVICE, DIODE: Same as A1A2CR1.	5-39
A1A4CR10		SEMICONDUCTOR DEVICE, DIODE: Same as A1A2CR1.	5-39
A1A4CR11		SEMICONDUCTOR DEVICE, DIODE: Same as A1A2CR1.	5-39
A1A4CR12		SEMICONDUCTOR DEVICE, DIODE: Same as A1A2CR1.	5-39
A1A4CR13		SEMICONDUCTOR DEVICE, DIODE: Same as A1A2CR1.	5-39
A1A4CR14		SEMICONDUCTOR DEVICE, DIODE: Same as A1A2CR1.	5-39
A1A4CR15		SEMICONDUCTOR DEVICE, DIODE: Same as A1A2CR1.	5-39
A1A4CR16		SEMICONDUCTOR DEVICE, DIODE: Same as A1A2CR1.	5-39
A1A4CR17		SEMICONDUCTOR DEVICE, DIODE: Same as A1A2CR1.	5-39
A1A4CR18		SEMICONDUCTOR DEVICE, DIODE: Same as A1A2CR1.	5-39
A1A4CR19		SEMICONDUCTOR DEVICE, DIODE: Same as A1A2CR1.	5-39
A1A4CR20		SEMICONDUCTOR DEVICE, DIODE: Same as A1A2CR1.	5-39
A1A4CR21		SEMICONDUCTOR DEVICE, DIODE: Same as A1A2CR1.	5-39
A1A4CR22		SEMICONDUCTOR DEVICE, DIODE: Same as A1A2CR1.	5-39
A1A4CR23		SEMICONDUCTOR DEVICE, DIODE: Same as A1A2CR1.	5-39
A1A4CR24		SEMICONDUCTOR DEVICE, DIODE: Same as A1A2CR1.	5-39
A1A4E1		TERMINAL, STUD, TP1: Same as A1A1E1.	5-39
A1A4E2		TERMINAL, STUD, TP2: Same as A1A1E1.	5-39
A1A4E3		TERMINAL, STUD, TP3: Same as A1A1E1.	5-39
A1A4Q1		TRANSISTOR: Same as A1A1Q4.	5-39
A1A4Q2		TRANSISTOR: Same as A1A1Q4.	5-39
A1A4Q3		TRANSISTOR: Same as A1A1Q4.	5-39
A1A4Q4		TRANSISTOR: Same as A1A1Q4.	5-39
A1A4Q5		TRANSISTOR: Same as A1A1Q4.	5-39
A1A4Q6		TRANSISTOR: Same as A1A1Q4.	5-39
A1A4Q7		TRANSISTOR: Same as A1A1Q4.	5-39
A1A4Q8		TRANSISTOR: Same as A1A1Q4.	5-39
A1A4Q9		TRANSISTOR: Same as A1A1Q8.	5-39
A1A4Q10		TRANSISTOR: Same as A1A1Q4.	5-39
A1A4Q11		TRANSISTOR: Same as A1A1Q4.	5-39
A1A4Q12		TRANSISTOR: Same as A1A1Q4.	5-39
A1A4Q13		TRANSISTOR: Same as A1A1Q4.	5-39
A1A4Q14		TRANSISTOR: Same as A1A1Q4.	5-39
A1A4Q15		TRANSISTOR: Same as A1A1Q4.	5-39
A1A4Q16		TRANSISTOR: Same as A1A1Q4.	5-39
A1A4Q17		TRANSISTOR: Same as A1A1Q4.	5-39
A1A4Q18		TRANSISTOR: Same as A1A1Q4.	5-39
A1A4Q19		TRANSISTOR: Same as A1A1Q4.	5-39
A1A4Q20		TRANSISTOR: Same as A1A1Q4.	5-39
A1A4Q21		TRANSISTOR: Same as A1A1Q8.	5-39
A1A4Q22		TRANSISTOR: Same as A1A1Q4.	5-39
A1A4R1		RESISTOR: Same as A1A2R1.	5-39
A1A4R2		RESISTOR: Same as A1A1R6.	5-39
A1A4R3		RESISTOR: Same as A1A2R3.	5-39

TABLE 6-1. (Continued)

REF DESIG	NOTES	NAME AND DESCRIPTION	FIG. NO.
A1A4R4		RESISTOR: Same as A1A2R4.	5-39
A1A4R5		RESISTOR: Same as A1A1R22.	5-39
A1A4R6		RESISTOR: Same as A1A2R6.	5-39
A1A4R7		RESISTOR: Same as A1A2R6	5-39
A1A4R8		RESISTOR: Same as A1A1R22.	5-39
A1A4R9		RESISTOR: Same as A1A2R4.	5-39
A1A4R10		RESISTOR: Same as A1A1R6.	5-39
A1A4R11		RESISTOR: Same as A1A2R3.	5-39
A1A4R12		RESISTOR: Same as A1A2R12.	5-39
A1A4R13		RESISTOR: Same as A1A1R6.	5-39
A1A4R14		RESISTOR: Same as A1A2R4.	5-39
A1A4R15		RESISTOR: Same as A1A2R4.	5-39
A1A4R16		RESISTOR: Same as A1A2R6.	5-39
A1A4R17		RESISTOR: Same as A1A2R6.	5-39
A1A4R18		RESISTOR: Same as A1A2R18.	5-39
A1A4R19		RESISTOR: Same as A1A2R4.	5-39
A1A4R20		RESISTOR: Same as A1A1R6.	5-39
A1A4R21		RESISTOR: Same as A1A2R4.	5-39
A1A4R22		RESISTOR: Same as A1A2R22.	5-39
A1A4R23		RESISTOR: Same as A1A1R6.	5-39
A1A4R24		RESISTOR: Same as A1A2R4.	5-39
A1A4R25		RESISTOR: Same as A1A2R4.	5-39
A1A4R26		RESISTOR: Same as A1A2R6.	5-39
A1A4R27		RESISTOR: Same as A1A2R6.	5-39
A1A4R28		RESISTOR: Same as A1A2R18.	5-39
A1A4R29		RESISTOR: Same as A1A2R4.	5-39
A1A4R30		RESISTOR: Same as A1A1R6.	5-39
A1A4R31		RESISTOR: Same as A1A2R4.	5-39
A1A4R32		RESISTOR: Same as A1A1R6.	5-39
A1A4R33		RESISTOR: Same as A1A2R4.	5-39
A1A4R34		RESISTOR: Same as A1A2R4.	5-39
A1A4R35		RESISTOR: Same as A1A2R18.	5-39
A1A4R36		RESISTOR: Same as A1A2R6.	5-39
A1A4R37		RESISTOR: Same as A1A2R6.	5-39
A1A4R38		RESISTOR: Same as A1A2R4.	5-39
A1A4R39		RESISTOR: Same as A1A1R6.	5-39
A1A4R40		RESISTOR: Same as A1A2R4.	5-39
A1A4R41		RESISTOR: Same as A1A2R6.	5-39
A1A4R42		RESISTOR: Same as A1A2R42.	5-39
A1A4R43		RESISTOR: Same as A1A2R1.	5-39
A1A4R44		RESISTOR: Same as A1A2R44.	5-39
A1A4R45		RESISTOR: Same as A1A2R45.	5-39
A1A4R46		RESISTOR: Same as A1A2R42.	5-39
A1A4R47		RESISTOR: Same as A1A2R42.	5-39
A1A4R48		RESISTOR: Same as A1A2R44.	5-39
A1A4R49		RESISTOR: Same as A1A2R44.	5-39
A1A4R50		RESISTOR: Same as A1A1R6.	5-39
A1A4R51		RESISTOR: Same as A1A2R3.	5-39
A1A4R52		RESISTOR: Same as A1A2R4.	5-39
A1A4R53		RESISTOR: Same as A1A2R6.	5-39
A1A4R54		RESISTOR: Same as A1A2R6.	5-39
A1A4R55		RESISTOR: Same as A1A2R18.	5-39
A1A4R56		RESISTOR: Same as A1A2R4.	5-39
A1A4R57		RESISTOR: Same as A1A1R6.	5-39
A1A4R58		RESISTOR: Same as A1A2R3.	5-39
A1A4R59		RESISTOR: Same as A1A2R12.	5-39
A1A4R60		RESISTOR: Same as A1A1R6.	5-39

TABLE 6-1. (Continued)

REF DESIG	NOTES	NAME AND DESCRIPTION	FIG. NO.
A1A4R61		RESISTOR: Same as A1A2R4.	5-39
A1A4R62		RESISTOR: Same as A1A2R4.	5-39
A1A4R63		RESISTOR: Same as A1A2R18.	5-39
A1A4R64		RESISTOR: Same as A1A2R6.	5-39
A1A4R65		RESISTOR: Same as A1A2R6.	5-39
A1A4R66		RESISTOR: Same as A1A2R4.	5-39
A1A4R67		RESISTOR: Same as A1A1R6.	5-39
A1A4R68		RESISTOR: Same as A1A2R4.	5-39
A1A4R69		RESISTOR: Same as A1A2R22.	5-39
A1A4R70		RESISTOR: Same as A1A1R6.	5-39
A1A4R71		RESISTOR: Same as A1A2R4.	5-39
A1A4R72		RESISTOR: Same as A1A2R4.	5-39
A1A4R73		RESISTOR: Same as A1A2R18.	5-39
A1A4R74		RESISTOR: Same as A1A2R6.	5-39
A1A4R75		RESISTOR: Same as A1A2R6.	5-39
A1A4R76		RESISTOR: Same as A1A2R4.	5-39
A1A4R77		RESISTOR: Same as A1A1R6.	5-39
A1A4R78		RESISTOR: Same as A1A2R4.	5-39
A1A4R79		RESISTOR: Same as A1A2R4.	5-39
A1A4R80		RESISTOR: Same as A1A2R1.	5-39
A1A4R81		RESISTOR: Same as A1A1R6.	5-39
A1A4R82		RESISTOR: Same as A1A2R4.	5-39
A1A4R83		RESISTOR: Same as A1A2R6.	5-39
A1A4R84		RESISTOR: Same as A1A2R6.	5-39
A1A4R85		RESISTOR: Same as A1A2R18.	5-39
A1A4R86		RESISTOR: Same as A1A2R4.	5-39
A1A4R87		RESISTOR: Same as A1A1R6.	5-39
A1A4R88		RESISTOR: Same as A1A2R4.	5-39
A1A4R89		RESISTOR: Same as A1A2R1.	5-39
A1A4R90		RESISTOR: Same as A1A2R44.	5-39
A1A4R91		RESISTOR: Same as A1A2R45.	5-39
A1A4R92		RESISTOR: Same as A1A2R6.	5-39
A1A4R93		RESISTOR: Same as A1A2R42.	5-39
A1A5		FREQUENCY DIVIDER: Printed circuit board w/all components assembled for operation; mfr CMC, dwg MP90-564L2.	5-40
A1A5C1		CAPACITOR: Same as A1A1C2.	5-40
A1A5C2		CAPACITOR: Same as A1A1C2.	5-40
A1A5C3		CAPACITOR: MIL type CM05D620J03.	5-40
A1A5C4		CAPACITOR: MIL type CM05D220J03.	5-40
A1A5C5		CAPACITOR: MIL type CM05D390J03.	5-40
A1A5C6		CAPACITOR: Same as A1A5C4.	5-40
A1A5C7		CAPACITOR: Same as A1A5C5.	5-40
A1A5C8		CAPACITOR: Same as A1A5C4.	5-40
A1A5C9		CAPACITOR: Same as A1A5C5.	5-40
A1A5C10		CAPACITOR: Same as A1A5C4.	5-40
A1A5C11		CAPACITOR: Same as A1A5C5.	5-40
A1A5C12		CAPACITOR: Same as A1A5C4.	5-40
A1A5C13		CAPACITOR: Same as A1A5C5.	5-40
A1A5C14		CAPACITOR: Same as A1A5C4.	5-40
A1A5C15		CAPACITOR: Same as A1A5C5.	5-40
A1A5C16		CAPACITOR: Same as A1A5C3.	5-40
A1A5C17		CAPACITOR: Same as A1A5C4.	5-40
A1A5C18		CAPACITOR: Same as A1A5C5.	5-40
A1A5C19		CAPACITOR: Same as A1A5C4.	5-40
A1A5C20		CAPACITOR: Same as A1A5C5.	5-40
A1A5C21		CAPACITOR: Same as A1A2C17.	5-40
A1A5C22		CAPACITOR: Same as A1A2C17.	5-40
A1A5C23		CAPACITOR: MIL type CM05D820J03.	5-40

TABLE 6-1. (Continued)

REF DESIG	NOTES	NAME AND DESCRIPTION	FIG. NO.
A1A5C24		CAPACITOR: MIL type CM05D270J03.	5-40
A1A5C25		CAPACITOR: MIL type CM05D470J03.	5-40
A1A5C26		CAPACITOR: Same as A1A2C17.	5-40
A1A5C27		CAPACITOR: MIL type CM05D180K03.	5-40
A1A5C28		CAPACITOR: Same as A1A5C5.	5-40
A1A5C29		CAPACITOR: Same as A1A5C27.	5-40
A1A5C30		CAPACITOR: MIL type CM05D101J03.	5-40
A1A5C31		CAPACITOR: Same as A1A5C27.	5-40
A1A5CR1		SEMICONDUCTOR DEVICE, DIODE: Same as A1A2CR1.	5-40
A1A5CR2		SEMICONDUCTOR DEVICE, DIODE: MIL type 1N3064.	5-40
A1A5CR3		SEMICONDUCTOR DEVICE, DIODE: Same as A1A5CR2.	5-40
A1A5CR4		SEMICONDUCTOR DEVICE, DIODE: Same as A1A2CR1.	5-40
A1A5CR5		SEMICONDUCTOR DEVICE, DIODE: Same as A1A2CR1.	5-40
A1A5CR6		SEMICONDUCTOR DEVICE, DIODE: Same as A1A5CR2.	5-40
A1A5CR7		SEMICONDUCTOR DEVICE, DIODE: Same as A1A5CR2.	5-40
A1A5CR8		SEMICONDUCTOR DEVICE, DIODE: Same as A1A5CR2.	5-40
A1A5CR9		SEMICONDUCTOR DEVICE, DIODE: Same as A1A5CR2.	5-40
A1A5CR10		SEMICONDUCTOR DEVICE, DIODE: Same as A1A2CR1.	5-40
A1A5CR11		SEMICONDUCTOR DEVICE, DIODE: Same as A1A2CR1.	5-40
A1A5CR12		SEMICONDUCTOR DEVICE, DIODE: Same as A1A5CR2.	5-40
A1A5CR13		SEMICONDUCTOR DEVICE, DIODE: Same as A1A5CR2.	5-40
A1A5CR14		SEMICONDUCTOR DEVICE, DIODE: Same as A1A2CR1.	5-40
A1A5CR15		SEMICONDUCTOR DEVICE, DIODE: Same as A1A2CR1.	5-40
A1A5CR16		SEMICONDUCTOR DEVICE, DIODE: Same as A1A5CR2.	5-40
A1A5CR17		SEMICONDUCTOR DEVICE, DIODE: Same as A1A5CR2.	5-40
A1A5CR18		SEMICONDUCTOR DEVICE, DIODE: Same as A1A2CR1.	5-40
A1A5CR19		SEMICONDUCTOR DEVICE, DIODE: Same as A1A2CR1.	5-40
A1A5CR20		SEMICONDUCTOR DEVICE, DIODE: Same as A1A5CR2.	5-40
A1A5CR21		SEMICONDUCTOR DEVICE, DIODE: Same as A1A5CR2.	5-40
A1A5CR22		SEMICONDUCTOR DEVICE, DIODE: Same as A1A5CR2.	5-40
A1A5CR23		SEMICONDUCTOR DEVICE, DIODE: Same as A1A2CR1.	5-40
A1A5E1		TERMINAL, STUD, TP1: Same as A1A1E1.	5-40
A1A5E2		TERMINAL, STUD, TP2: Same as A1A1E1.	5-40
A1A5E3		TERMINAL, STUD, TP3: Same as A1A1E1.	5-40
A1A5E4		TERMINAL, STUD, TP4: Same as A1A1E1.	5-40
A1A5Q1		TRANSISTOR: MIL type 2N706.	5-40
A1A5Q2		TRANSISTOR: Same as A1A5Q1.	5-40
A1A5Q3		TRANSISTOR: Same as A1A5Q1.	5-40
A1A5Q4		TRANSISTOR: Same as A1A5Q1.	5-40
A1A5Q5		TRANSISTOR: Same as A1A5Q1.	5-40
A1A5Q6		TRANSISTOR: Same as A1A5Q1.	5-40
A1A5Q7		TRANSISTOR: Same as A1A5Q1.	5-40
A1A5Q8		TRANSISTOR: Same as A1A5Q1.	5-40
A1A5Q9		TRANSISTOR: Same as A1A1Q4.	5-40
A1A5Q10		TRANSISTOR: Same as A1A1Q8.	5-40
A1A5Q11		TRANSISTOR: Same as A1A5Q1.	5-40
A1A5Q12		TRANSISTOR: Same as A1A5Q1.	5-40
A1A5Q13		TRANSISTOR: Same as A1A5Q1.	5-40
A1A5Q14		TRANSISTOR: Same as A1A5Q1.	5-40
A1A5Q15		TRANSISTOR: Same as A1A5Q1.	5-40
A1A5Q16		TRANSISTOR: Same as A1A1Q4.	5-40
A1A5Q17		TRANSISTOR: Same as A1A1Q4.	5-40
A1A5R1		RESISTOR: Same as A1A2R4.	5-40
A1A5R2		RESISTOR: Same as A1A1R6.	5-40
A1A5R3		RESISTOR: Same as A1A2R1.	5-40
A1A5R4		RESISTOR: Same as A1A2R3.	5-40
A1A5R5		RESISTOR: MIL type RC07GF473J.	5-40

TABLE 6-1. (Continued)

REF DESIG	NOTES	NAME AND DESCRIPTION	FIG. NO.
A1A5R6		RESISTOR: Same as A1A5R5.	5-40
A1A5R7		RESISTOR: Same as A1A2R3.	5-40
A1A5R8		RESISTOR: Same as A1A1R6.	5-40
A1A5R9		RESISTOR: Same as A1A2R4.	5-40
A1A5R10		RESISTOR: Same as A1A2R4.	5-40
A1A5R11		RESISTOR: Same as A1A1R6.	5-40
A1A5R12		RESISTOR: Same as A1A2R3.	5-40
A1A5R13		RESISTOR: Same as A1A5R5.	5-40
A1A5R14		RESISTOR: Same as A1A5R5.	5-40
A1A5R15		RESISTOR: Same as A1A2R3.	5-40
A1A5R16		RESISTOR: Same as A1A1R6.	5-40
A1A5R17		RESISTOR: Same as A1A2R4.	5-40
A1A5R18		RESISTOR: Same as A1A2R4.	5-40
A1A5R19		RESISTOR: Same as A1A1R6.	5-40
A1A5R20		RESISTOR: Same as A1A2R3.	5-40
A1A5R21		RESISTOR: Same as A1A5R5.	5-40
A1A5R22		RESISTOR: Same as A1A5R5.	5-40
A1A5R23		RESISTOR: Same as A1A2R3.	5-40
A1A5R24		RESISTOR: Same as A1A1R6.	5-40
A1A5R25		RESISTOR: Same as A1A2R4.	5-40
A1A5R26		RESISTOR: Same as A1A2R4.	5-40
A1A5R27		RESISTOR: Same as A1A2R1.	5-40
A1A5R28		RESISTOR: MIL type RL20AD471J.	5-40
A1A5R29		RESISTOR: Same as A1A2R1.	5-40
A1A5R30		RESISTOR: Same as A1A2R6.	5-40
A1A5R31		RESISTOR: Same as A1A2R6.	5-40
A1A5R32		RESISTOR: Same as A1A2R1.	5-40
A1A5R33		RESISTOR: Same as A1A5R28.	5-40
A1A5R34		RESISTOR: Same as A1A2R4.	5-40
A1A5R35		RESISTOR: Same as A1A2R22.	5-40
A1A5R36		RESISTOR: Same as A1A5R5.	5-40
A1A5R37		RESISTOR: Same as A1A2R18.	5-40
A1A5R38		RESISTOR: MIL type RC07GF273J.	5-40
A1A5R39		RESISTOR: Same as A1A2R1.	5-40
A1A5R40		RESISTOR: Same as A1A1R14.	5-40
A1A5R41		RESISTOR: Same as A1A2R4.	5-40
A1A5R42		RESISTOR: Same as A1A1R16.	5-40
A1A5R43		RESISTOR: MIL type RC07GF470J.	5-40
A1A5R44		RESISTOR: MIL type RC07GF272J.	5-40
A1A5R45		RESISTOR: Same as A1A2R18.	5-40
A1A5R46		RESISTOR: Same as A1A1R14.	5-40
A1A5R47		RESISTOR: MIL type RC07GF821J.	5-40
A1A5R48		RESISTOR: Same as A1A2R1.	5-40
A1A5R49		RESISTOR: Same as A1A2R4.	5-40
A1A5R50		RESISTOR: MIL type RL42AD181J.	5-40
A1A5R51		RESISTOR: MIL type RL32AD680J.	5-40
A1A5R52		RESISTOR: Same as A1A2R4.	5-40
A1A5R53		RESISTOR: Same as A1A1R6.	5-40
A1A5R54		RESISTOR: Same as A1A2R3.	5-40
A1A5R55		RESISTOR: Same as A1A5R44.	5-40
A1A5R56		RESISTOR: Same as A1A2R6.	5-40
A1A5R57		RESISTOR: Same as A1A2R6.	5-40
A1A5R58		RESISTOR: Same as A1A2R3.	5-40
A1A5R59		RESISTOR: Same as A1A1R6.	5-40
A1A5R60		RESISTOR: Same as A1A2R22.	5-40
A1A5R61		RESISTOR: Same as A1A2R22.	5-40
A1A5R62		RESISTOR: Same as A1A2R3.	5-40

TABLE 6-1. (Continued)

REF DESIG	NOTES	NAME AND DESCRIPTION	FIG. NO.
A1A5R63		RESISTOR: Same as A1A2R6.	5-40
A1A5R64		RESISTOR: Same as A1A2R3.	5-40
A1A5R65		RESISTOR: Same as A1A2R6.	5-40
A1A5R66		RESISTOR: Same as A1A2R3.	5-40
A1A5R67		RESISTOR: Same as A1A2R12.	5-40
A1A5R68		RESISTOR: Same as A1A2R18.	5-40
A1A6		FREQUENCY MULTIPLIER: Printed circuit board w/all components assembled for operation; mfr CMC, dwg MP25-526L4.	5-41
A1A6C1		CAPACITOR: MIL type CP05A1KF333K3.	5-41
A1A6C2		CAPACITOR: MIL type CM05D221J03.	5-41
A1A6C3		CAPACITOR, FIXED, PLASTIC DIELECTRIC: 0.05 μfd +40% -0%; mfr SAN, P/N W20982.	5-41
A1A6C4		CAPACITOR: Same as A1A5C23.	5-41
A1A6C5		CAPACITOR: Same as A1A6C3.	5-41
A1A6C6		CAPACITOR: MIL type CM05E470J03.	5-41
A1A6C7		CAPACITOR, VARIABLE: 1 to 30$\mu\mu$f, trimmer type; mfr ROA, P/N GS1630.	5-41
A1A6C8		CAPACITOR: Same as A1A6C2.	5-41
A1A6C9		CAPACITOR: MIL type CM05C100CJ3.	5-41
A1A6C10		CAPACITOR: MIL type CM05F391J03.	5-41
A1A6C11		CAPACITOR: Same as A1A5C24.	5-41
A1A6C12		CAPACITOR: Same as A1A6C10.	5-41
A1A6C13		CAPACITOR: Same as A1A5C24.	5-41
A1A6C14		CAPACITOR: Same as A1A6C10.	5-41
A1A6C15		CAPACITOR: Same as A1A6C6.	5-41
A1A6C16		CAPACITOR: Same as A1A5C24.	5-41
A1A6C17		CAPACITOR: MIL type CM05C180J03.	5-41
A1A6C18		CAPACITOR: MIL type CK06CW222K.	5-41
A1A6C19		CAPACITOR: Same as A1A6C18.	5-41
A1A6C20		CAPACITOR: Same as A1A5C5.	5-41
A1A6C21		CAPACITOR: Same as A1A6C6.	5-41
A1A6C22		CAPACITOR: Same as A1A5C24.	5-41
A1A6C23		CAPACITOR: Same as A1A6C17.	5-41
A1A6C24		CAPACITOR: MIL type CM05D680J03.	5-41
A1A6C25		CAPACITOR: Same as A1A5C24.	5-41
A1A6C26		CAPACITOR: Same as A1A6C18.	5-41
A1A6C27		CAPACITOR: Same as A1A6C24.	5-41
A1A6C28		CAPACITOR: Same as A1A5C27.	5-41
A1A6C29		CAPACITOR: Same as A1A6C24.	5-41
A1A6C30		CAPACITOR: MIL type CM0JC100J03.	5-41
A1A6C31		CAPACITOR: Same as A1A5C24.	5-41
A1A6C32		CAPACITOR: Same as A1A5C24.	5-41
A1A6C33		CAPACITOR: MIL type CM05D391J03.	5-41
A1A6C34		CAPACITOR: Same as A1A6C3.	5-41
A1A6C35		CAPACITOR: Same as A1A6C3.	5-41
A1A6C36		CAPACITOR: Same as A1A6C3.	5-41
A1A6C37		CAPACITOR: Same as A1A6C3.	5-41
A1A6C38		CAPACITOR: Same as A1A6C3.	5-41
A1A6C39		CAPACITOR: Same as A1A6C3.	5-41
A1A6C40		CAPACITOR: Same as A1A6C3.	5-41
A1A6C41		CAPACITOR: Same as A1A6C3.	5-41
A1A6C42		CAPACITOR: Same as A1A6C3.	5-41
A1A6C43		CAPACITOR: Same as A1A6C3.	5-41
A1A6C44		CAPACITOR: Same as A1A6C3.	5-41
A1A6C45		CAPACITOR: MIL type CM05C050K03.	5-41
A1A6C46		CAPACITOR: Same as A1A6C45.	5-41
A1A6C47		CAPACITOR: MIL type CC204J330G.	5-41
A1A6C48		CAPACITOR: Same as A1A6C47.	5-41
A1A6C49		CAPACITOR: Same as A1A6C47.	5-41

TABLE 6-1. (Continued)

REF DESIG	NOTES	NAME AND DESCRIPTION	FIG. NO.
A1A6CR1		SEMICONDUCTOR DEVICE, DIODE: Same as A1A5CR2.	5-41
A1A6CR2		SEMICONDUCTOR DEVICE, DIODE: Same as A1A5CR2.	5-41
A1A6CR3		SEMICONDUCTOR DEVICE, DIODE: Same as A1A5CR2.	5-41
A1A6CR4		SEMICONDUCTOR DEVICE, DIODE: Same as A1A5CR2.	5-41
A1A6CR5		Not Used.	
A1A6CR6		SEMICONDUCTOR DEVICE, DIODE: Same as A1A5CR2.	5-41
A1A6CR7		SEMICONDUCTOR DEVICE, DIODE: Same as A1A5CR2.	5-41
A1A6CR8		SEMICONDUCTOR DEVICE, DIODE: Same as A1A5CR2.	5-41
A1A6CR9		SEMICONDUCTOR DEVICE, DIODE: Same as A1A5CR2.	5-41
A1A6CR10		SEMICONDUCTOR DEVICE, DIODE: Same as A1A5CR2.	5-41
A1A6CR11		SEMICONDUCTOR DEVICE, DIODE: Same as A1A5CR2.	5-41
A1A6CR12		SEMICONDUCTOR DEVICE, DIODE: Same as A1A5CR2.	5-41
A1A6E1		TERMINAL, STUD, TP1: Same as A1A1E1.	5-41
A1A6E2		TERMINAL, STUD, TP2: Same as A1A1E1.	5-41
A1A6E3		TERMINAL, STUD, TP3: Same as A1A1E1.	5-41
A1A6E4		TERMINAL, STUD, TP4: Same as A1A1E1.	5-41
A1A6E5		TERMINAL, STUD, TP5: Same as A1A1E1.	5-41
A1A6L1		COIL: MIL type MS75055-1.	5-41
A1A6L2		COIL, RADIO FREQUENCY: 70 μh at 1 mc, 3 layers at 30 turns per layer of No. 28 wire, slug-tuned type; mfr CMC, dwg MP5101259.	5-41
A1A6L3		COIL: Same as A1A6L2.	5-41
A1A6L4		COIL: Same as A1A6L2.	5-41
A1A6L5		COIL: MIL type MS75052-4.	5-41
A1A6L6		COIL, RADIO FREQUENCY: 1.5 to 3.8 μh at 10 mc, 19 turns No. 28 wire, slug-tuned type; mfr CMC, dwg MP5101260.	5-41
A1A6L7		COIL: Same as A1A6L6.	5-41
A1A6L8		COIL: Same as A1A6L6.	5-41
A1A6MP1		SHIELD: Listed for reference only.	5-2
A1A6Q1		TRANSISTOR: Same as A1A5Q1.	5-41
A1A6Q2		TRANSISTOR: Same as A1A5Q1.	5-41
A1A6Q3		TRANSISTOR: Same as A1A5Q1.	5-41
A1A6Q4		TRANSISTOR: Same as A1A5Q1.	5-41
A1A6Q5		TRANSISTOR: Same as A1A5Q1.	5-41
A1A6Q6		TRANSISTOR: Same as A1A5Q1.	5-41
A1A6Q7		TRANSISTOR: Same as A1A5Q1.	5-41
A1A6Q8		TRANSISTOR: Same as A1A5Q1.	5-41
A1A6Q9		TRANSISTOR: Same as A1A5Q1.	5-41
A1A6Q10		TRANSISTOR: Same as A1A5Q1.	5-41
A1A6Q11		TRANSISTOR: Same as A1A5Q1.	5-41
A1A6Q12		TRANSISTOR: Same as A1A5Q1.	5-41
A1A6Q13		TRANSISTOR: Same as A1A5Q1.	5-41
A1A6Q14		TRANSISTOR: Same as A1A5Q1.	5-41
A1A6Q15		TRANSISTOR: Same as A1A5Q1.	5-41
A1A6Q16		TRANSISTOR: Same as A1A5Q1.	5-41
A1A6Q17		TRANSISTOR: Same as A1A5Q1.	5-41
A1A6Q18		TRANSISTOR: Same as A1A5Q1.	5-41
A1A6Q19		TRANSISTOR: Same as A1A5Q1.	5-41
A1A6Q20		TRANSISTOR: Same as A1A5Q1.	5-41
A1A6R1		RESISTOR: Same as A1A1R7.	5-41
A1A6R2		RESISTOR: Same as A1A2R3.	5-41
A1A6R3		RESISTOR: MIL type RC07GF223J.	5-41
A1A6R4		RESISTOR: Same as A1A2R3.	5-41
A1A6R5		RESISTOR: Same as A1A2R3.	5-41
A1A6R6		RESISTOR: Same as A1A1R7.	5-41
A1A6R7		RESISTOR: Same as A1A2R6.	5-41
A1A6R8		RESISTOR: Same as A1A1R7.	5-41
A1A6R9		RESISTOR: MIL type RC07GF392F.	5-41
A1A6R10		RESISTOR: Same as A1A2R1.	5-41

TABLE 6-1. (Continued)

REF DESIG	NOTES	NAME AND DESCRIPTION	FIG. NO.
A1A6R11		RESISTOR: Same as A1A2R1.	5-41
A1A6R12		RESISTOR: Same as A1A2R1.	5-41
A1A6R13		RESISTOR: Same as A1A2R6.	5-41
A1A6R14		RESISTOR: Same as A1A1R6.	5-41
A1A6R15		RESISTOR: Same as A1A6R9.	5-41
A1A6R16		RESISTOR: Same as A1A2R1.	5-41
A1A6R17		RESISTOR: Same as A1A2R45.	5-41
A1A6R18		RESISTOR: Same as A1A1R6.	5-41
A1A6R19		RESISTOR: Same as A1A2R1.	5-41
A1A6R20		RESISTOR: Same as A1A2R1.	5-41
A1A6R21		RESISTOR: Same as A1A2R1.	5-41
A1A6R22		RESISTOR: Same as A1A2R45.	5-41
A1A6R23		RESISTOR: Same as A1A1R6.	5-41
A1A6R24		RESISTOR: Same as A1A2R22.	5-41
A1A6R25		RESISTOR: Same as A1A2R45.	5-41
A1A6R26		RESISTOR: MIL type RC07GF683J.	5-41
A1A6R27		RESISTOR: Same as A1A1R6.	5-41
A1A6R28		RESISTOR: MIL type RC07GF332J.	5-41
A1A6R29		RESISTOR: Same as A1A1R16.	5-41
A1A6R30		RESISTOR: MIL type RC07GF561J.	5-41
A1A6R31		RESISTOR: Same as A1A6R30.	5-41
A1A6R32		RESISTOR: Same as A1A2R1.	5-41
A1A6R33		RESISTOR: MIL type RC07GF101J.	5-41
A1A6R34		RESISTOR: Same as A1A2R1.	5-41
A1A6R35		RESISTOR: Same as A1A2R1.	5-41
A1A6R36		RESISTOR: Same as A1A2R1.	5-41
A1A6R37		RESISTOR: Same as A1A2R45.	5-41
A1A6R38		RESISTOR: Same as A1A1R6.	5-41
A1A6R39		RESISTOR: Same as A1A2R1.	5-41
A1A6R40		RESISTOR: Same as A1A2R45.	5-41
A1A6R41		RESISTOR: Same as A1A1R6.	5-41
A1A6R42		RESISTOR: Same as A1A2R1.	5-41
A1A6R43		RESISTOR: Same as A1A2R45.	5-41
A1A6R44		RESISTOR: Same as A1A1R6.	5-41
A1A6R45		RESISTOR: Same as A1A2R1.	5-41
A1A6R46		RESISTOR: Same as A1A2R45.	5-41
A1A6R47		RESISTOR: Same as A1A1R6.	5-41
A1A6R48		RESISTOR: Same as A1A2R45.	5-41
A1A6R49		RESISTOR: Same as A1A1R16.	5-41
A1A6R50		RESISTOR: Same as A1A1R6.	5-41
A1A6R51		RESISTOR: Same as A1A2R1.	5-41
A1A6R52		RESISTOR: Same as A1A6R3.	5-41
A1A6R53		RESISTOR: Same as A1A5R28.	5-41
A1A6R54		RESISTOR: Same as A1A2R22.	5-41
A1A6R55		RESISTOR: Same as A1A2R1.	5-41
A1A6R56		RESISTOR: MIL type RL20AD331J.	5-41
A1A6R57		RESISTOR: Same as A1A2R44.	5-41
A1A7		CONTROL, DISPLAY: Printed circuit board w/all components assembled for operation; mfr CMC, dwg MP20-523L4.	5-42
A1A7C1		CAPACITOR: MIL type CS13AF010K.	5-42
A1A7C2		CAPACITOR: Same as A1A7C1.	5-42
A1A7C3		CAPACITOR: Same as A1A6C33.	5-42
A1A7C4		CAPACITOR: Same as A1A2C1.	5-42
A1A7C5		CAPACITOR: MIL type CS13AE150K.	5-42
A1A7C6		CAPACITOR: Same as A1A5C30.	5-42
A1A7C7		CAPACITOR: Same as A1A5C30.	5-42
A1A7C8		CAPACITOR: MIL type CM06D102J03.	5-42

TABLE 6-1. (Continued)

REF DESIG	NOTES	NAME AND DESCRIPTION	FIG. NO.
A1A7C9		CAPACITOR: MIL type CS13AD680K.	5-42
A1A7C10		CAPACITOR: MIL type CM06D332J03.	5-42
A1A7C11		CAPACITOR: Same as A1A1C2.	5-42
A1A7CR1		SEMICONDUCTOR DEVICE, DIODE: Same as A1A2CR1.	5-42
A1A7CR2		SEMICONDUCTOR DEVICE, DIODE: Same as A1A2CR1.	5-42
A1A7CR3		SEMICONDUCTOR DEVICE, DIODE: Same as A1A2CR1.	5-42
A1A7CR4		SEMICONDUCTOR DEVICE, DIODE: Same as A1A2CR1.	5-42
A1A7CR5		SEMICONDUCTOR DEVICE, DIODE: Same as A1A5CR2.	5-42
A1A7CR6		SEMICONDUCTOR DEVICE, DIODE: Same as A1A2CR1.	5-42
A1A7CR7		SEMICONDUCTOR DEVICE, DIODE: Same as A1A1CR15.	5-42
A1A7CR8		Not Used.	
A1A7CR9		SEMICONDUCTOR DEVICE, DIODE: Same as A1A2CR1.	5-42
A1A7CR10		SEMICONDUCTOR DEVICE, DIODE: Same as A1A1CR15.	5-42
A1A7CR11		SEMICONDUCTOR DEVICE, DIODE: Same as A1A2CR1.	5-42
A1A7CR12		SEMICONDUCTOR DEVICE, DIODE: MIL type 1N485B.	5-42
A1A7CR13		SEMICONDUCTOR DEVICE, DIODE: Same as A1A7CR12.	5-42
A1A7CR14		SEMICONDUCTOR DEVICE, DIODE: Same as A1A7CR12.	5-42
A1A7CR15		SEMICONDUCTOR DEVICE, DIODE: Same as A1A7CR12.	5-42
A1A7CR16		SEMICONDUCTOR DEVICE, DIODE: Same as A1A7CR12.	5-42
A1A7CR17		SEMICONDUCTOR DEVICE, DIODE: Same as A1A7CR12.	5-42
A1A7CR18		SEMICONDUCTOR DEVICE, DIODE: Same as A1A7CR12.	5-42
A1A7CR19		SEMICONDUCTOR DEVICE, DIODE: Same as A1A7CR12.	5-42
A1A7CR20		SEMICONDUCTOR DEVICE, DIODE: Same as A1A7CR12.	5-42
A1A7CR21		SEMICONDUCTOR DEVICE, DIODE: Same as A1A1CR15.	5-42
A1A7CR22		SEMICONDUCTOR DEVICE, DIODE: Same as A1A2CR1.	5-42
A1A7E1		TERMINAL, STUD, TP1: Same as A1A1E1.	5-42
A1A7E2		TERMINAL, STUD, TP2: Same as A1A1E1.	5-42
A1A7E3		TERMINAL, STUD, TP3: Same as A1A1E1.	5-42
A1A7E4		TERMINAL, STUD, TP4: Same as A1A1E1.	5-42
A1A7E5		TERMINAL, STUD, TP5: Same as A1A1E1.	5-42
A1A7Q1		TRANSISTOR: Same as A1A1Q4.	5-42
A1A7Q2		TRANSISTOR: Same as A1A1Q4.	5-42
A1A7Q3		TRANSISTOR: Same as A1A1Q4.	5-42
A1A7Q4		TRANSISTOR: Same as A1A1Q4.	5-42
A1A7Q5		TRANSISTOR: Same as A1A1Q4.	5-42
A1A7Q6		TRANSISTOR: Same as A1A1Q4.	5-42
A1A7Q7		TRANSISTOR: Same as A1A1Q4.	5-42
A1A7Q8		TRANSISTOR: Same as A1A1Q4.	5-42
A1A7Q9		TRANSISTOR: Same as A1A1Q4.	5-42
A1A7Q10		TRANSISTOR: Same as A1A1Q8.	5-42
A1A7Q11		TRANSISTOR: MIL type 2N1711.	5-42
A1A7Q12		TRANSISTOR: Same as A1A1Q4.	5-42
A1A7Q13		TRANSISTOR: Same as A1A1Q4.	5-42
A1A7R1		RESISTOR: Same as A1A5R44.	5-42
A1A7R2		RESISTOR: Same as A1A2R4.	5-42
A1A7R3		RESISTOR: Same as A1A2R4.	5-42
A1A7R4		RESISTOR: Same as A1A2R44.	5-42
A1A7R5		RESISTOR: Same as A1A2R18.	5-42
A1A7R6		RESISTOR: Same as A1A2R22.	5-42
A1A7R7		RESISTOR: Same as A1A6R3.	5-42
A1A7R8		RESISTOR: Same as A1A2R6.	5-42
A1A7R9		RESISTOR: MIL type RC07GF183J.	5-42
A1A7R10		RESISTOR: Same as A1A5R5.	5-42
A1A7R11		RESISTOR: Same as A1A1R16.	5-42
A1A7R12		RESISTOR: Same as A1A2R4.	5-42
A1A7R13		RESISTOR: Same as A1A1R16.	5-42
A1A7R14		RESISTOR: Same as A1A5R38.	5-42

TABLE 6-1. (Continued)

REF DESIG	NOTES	NAME AND DESCRIPTION	FIG. NO.
A1A7R15		RESISTOR: Same as A1A5R38.	5-42
A1A7R16		RESISTOR: MIL type RL20AD391J.	5-42
A1A7R17		RESISTOR: Same as A1A2R6.	5-42
A1A7R18		RESISTOR: MIL type RL20AD121J.	5-42
A1A7R19		RESISTOR: Same as A1A5R44.	5-42
A1A7R20		RESISTOR: Same as A1A5R44.	5-42
A1A7R21		RESISTOR: Same as A1A1R22.	5-42
A1A7R22		RESISTOR: Same as A1A2R4.	5-42
A1A7R23		RESISTOR: Same as A1A5R5.	5-42
A1A7R24		RESISTOR: Same as A1A5R5.	5-42
A1A7R25		RESISTOR: Same as A1A1R6.	5-42
A1A7R26		RESISTOR: Same as A1A5R28.	5-42
A1A7R27		RESISTOR: Same as A1A2R45.	5-42
A1A7R28		RESISTOR: Same as A1A2R6.	5-42
A1A7R29		RESISTOR: Same as A1A2R3.	5-42
A1A7R30		RESISTOR: Same as A1A2R3.	5-42
A1A7R31		RESISTOR: Same as A1A1R16.	5-42
A1A7R32		RESISTOR: Same as A1A5R5.	5-42
A1A7R33		RESISTOR: Same as A1A5R38.	5-42
A1A7R34		RESISTOR: Same as A1A5R44.	5-42
A1A7R35		RESISTOR: Same as A1A2R22.	5-42
A1A7R36		RESISTOR: MIL type RC07GF151J.	5-42
A1A7R37		RESISTOR: Same as A1A2R1.	5-42
A1A7R38		RESISTOR: Same as A1A2R4.	5-42
A1A7R39		RESISTOR: Same as A1A1R22.	5-42
A1A7R40		RESISTOR: MIL type RL42AD152J.	5-42
A1A7R41		RESISTOR: Same as A1A2R4.	5-42
A1A7R42		RESISTOR: Same as A1A1R22.	5-42
A1A7R43		RESISTOR: Same as A1A1R22.	5-42
A1A7R44		RESISTOR: Same as A1A2R4.	5-42
A1A7R45		RESISTOR: Same as A1A1R22.	5-42
A1A7R46		RESISTOR: Same as A1A2R4.	5-42
A1A7R47		RESISTOR: Same as A1A1R22.	5-42
A1A7R48		RESISTOR: Same as A1A2R4.	5-42
A1A7R49		RESISTOR: Same as A1A2R4.	5-42
A1A7R50		RESISTOR: Same as A1A2R4.	5-42
A1A7R51		RESISTOR: Same as A1A2R4.	5-42
A1A7R52		RESISTOR: Same as A1A2R4.	5-42
A1A8		AMPLIFIER-ELECTRONIC GATE: Printed circuit board w/all components assembled for operation; mfr CMC, dwg MP14-545L5.	5-43
A1A8C1		CAPACITOR: MIL type CK06CW222K.	5-43
A1A8C2		CAPACITOR: Same as A1A6C18.	5-43
A1A8C3		CAPACITOR: Same as A1A6C18.	5-43
A1A8C4		CAPACITOR: Same as A1A6C18.	5-43
A1A8C5		CAPACITOR: Same as A1A5C5.	5-43
A1A8C6		CAPACITOR: Same as A1A6C18.	5-43
A1A8C7		CAPACITOR: Same as A1A5C23.	5-43
A1A8C8		CAPACITOR: Same as A1A6C18.	5-43
A1A8C9		CAPACITOR: MIL type CS13AB331K.	5-43
A1A8C10		CAPACITOR: MIL type CM05D181J03.	5-43
A1A8C11		CAPACITOR: Same as A1A1C6.	5-43
A1A8C12		CAPACITOR: Same as A1A5C4.	5-43
A1A8C13		CAPACITOR: Same as A1A6C33.	5-43
A1A8C14		CAPACITOR: Same as A1A8C9.	5-43
A1A8C15		CAPACITOR: Same as A1A8C10.	5-43
A1A8C16		CAPACITOR: Same as A1A2C1.	5-43
A1A8C17		CAPACITOR: Same as A1A6C18.	5-43

TABLE 6-1. (Continued)

REF DESIG	NOTES	NAME AND DESCRIPTION	FIG. NO.
A1A8C18		CAPACITOR: Same as A1A6C33.	5-43
A1A8C19		CAPACITOR: Same as A1A5C27.	5-43
A1A8C20		CAPACITOR: Same as A1A6C3.	5-43
A1A8C21		CAPACITOR: Same as A1A8C20.	5-43
A1A8C22		CAPACITOR: Same as A1A8C20.	5-43
A1A8C23		CAPACITOR: Same as A1A8C20.	5-43
A1A8C24		CAPACITOR: Same as A1A6C3.	5-43
A1A8C25		CAPACITOR: Same as A1A6C18.	5-43
A1A8C26		CAPACITOR: Same as A1A1C6.	5-43
A1A8CR1		SEMICONDUCTOR DEVICE, DIODE: Same as A1A2CR1.	5-43
A1A8CR2		SEMICONDUCTOR DEVICE, DIODE: Same as A1A2CR1.	5-43
A1A8CR3		SEMICONDUCTOR DEVICE, DIODE: Same as A1A2CR1.	5-43
A1A8CR4		SEMICONDUCTOR DEVICE, DIODE: Same as A1A2CR1.	5-43
A1A8CR5		SEMICONDUCTOR DEVICE, DIODE: Same as A1A2CR1.	5-43
A1A8CR6		SEMICONDUCTOR DEVICE, DIODE: Same as A1A2CR1.	5-43
A1A8CR7		SEMICONDUCTOR DEVICE, DIODE: Same as A1A2CR1.	5-43
A1A8CR8		SEMICONDUCTOR DEVICE, DIODE: Same as A1A5CR2.	5-43
A1A8CR9		SEMICONDUCTOR DEVICE, DIODE: Same as A1A5CR2.	5-43
A1A8CR10		SEMICONDUCTOR DEVICE, DIODE: MIL type 1N748A.	5-43
A1A8CR11		SEMICONDUCTOR DEVICE, DIODE: MIL type 1N4524; mfr CMC, dwg MP4300180.	5-43
A1A8CR12		SEMICONDUCTOR DEVICE, DIODE: Same as A1A8CR11.	5-43
A1A8CR13		SEMICONDUCTOR DEVICE, DIODE: Same as A1A8CR11.	5-43
A1A8E1		TERMINAL, STUD, TP1: Same as A1A1E1.	5-43
A1A8E2		TERMINAL, STUD, TP2: Same as A1A1E1.	5-43
A1A8E3		TERMINAL, STUD, TP3: Same as A1A1E1.	5-43
A1A8E4		TERMINAL, STUD, TP4: Same as A1A1E1.	5-43
A1A8E5		BEAD, FERRITE: 0.113 inch long; 0.138 inch dia., 0.059 inch hole along length; mfr FER, P/N K500100/33.	5-43
A1A8E6		BEAD, FERRITE: Same as A1A8E5.	5-43
A1A8J1		CONNECTOR, RECEPTACLE, ELECTRICAL: Radio frequency, 90° angle type, hermetically sealed, five pin terminals for mounting on printed circuit board, coaxial connector; mfr SEA, P/N 50-153-0000.	5-43
A1A8L1		COIL, RADIO FREQUENCY: MIL type MS75008-40.	5-43
A1A8L2		COIL, RADIO FREQUENCY: 0.82 μh ±10%, 0.25 watt, molded core; mfr DEL, P/N 1025-18.	5-43
A1A8Q1		TRANSISTOR: Same as A1A1Q4.	5-43
A1A8Q2		TRANSISTOR: Same as A1A1Q4.	5-43
A1A8Q3		TRANSISTOR: Same as A1A1Q8.	5-43
A1A8Q4		TRANSISTOR: Same as A1A1Q4.	5-43
A1A8Q5		TRANSISTOR: Same as A1A5Q1.	5-43
A1A8Q6		TRANSISTOR: MIL type 2N964.	5-43
A1A8Q7		TRANSISTOR: Same as A1A5Q1.	5-43
A1A8Q8		TRANSISTOR: Type 2N2369A; mfr CMC, dwg MP4906072.	5-43
A1A8Q9		TRANSISTOR: Same as A1A8Q8.	5-43
A1A8Q10		TRANSISTOR: Same as A1A8Q8.	5-43
A1A8Q11		TRANSISTOR: Same as A1A8Q8.	5-43
A1A8Q12		TRANSISTOR: Same as A1A8Q8.	5-43
A1A8Q13		TRANSISTOR: Type 2N709; mfr CMC, dwg MP4906045.	5-43
A1A8Q14		TRANSISTOR: Same as A1A5Q1.	5-43
A1A8R1		RESISTOR: Same as A1A2R44.	5-43
A1A8R2		RESISTOR: Same as A1A2R42.	5-43
A1A8R3		RESISTOR: Same as A1A2R44.	5-43
A1A8R4		RESISTOR: Same as A1A2R42.	5-43
A1A8R5		RESISTOR: Same as A1A2R6.	5-43
A1A8R6		RESISTOR: Same as A1A2R1.	5-43
A1A8R7		RESISTOR: Same as A1A2R1.	5-43

TABLE 6-1. (Continued)

REF DESIG	NOTES	NAME AND DESCRIPTION	FIG. NO.
A1A8R8		RESISTOR: Same as A1A2R22.	5-43
A1A8R9		RESISTOR: Same as A1A1R22.	5-43
A1A8R10		RESISTOR: Same as A1A2R1.	5-43
A1A8R11		RESISTOR: Same as A1A2R4.	5-43
A1A8R12		RESISTOR: Same as A1A2R42.	5-43
A1A8R13		RESISTOR: Same as A1A1R7.	5-43
A1A8R14		RESISTOR: Same as A1A6R9.	5-43
A1A8R15		RESISTOR: Same as A1A2R45.	5-43
A1A8R16		RESISTOR: Same as A1A2R3.	5-43
A1A8R17		RESISTOR: Same as A1A2R6.	5-43
A1A8R18		RESISTOR: Same as A1A2R1.	5-43
A1A1R19		RESISTOR: Same as A1A2R44.	5-43
A1A8R20		RESISTOR: Same as A1A2R42.	5-43
A1A8R21		RESISTOR: MIL type RL20AD101J.	5-43
A1A8R22		RESISTOR: Same as A1A1R22.	5-43
A1A8R23		RESISTOR: MIL type RL32AD471J.	5-43
A1A8R24		RESISTOR: Same as A1A1R14.	5-43
A1A8R25		RESISTOR: MIL type RL20AD101J.	5-43
A1A8R26		RESISTOR: MIL type RN60D2051F.	5-43
A1A8R27		RESISTOR: MIL type RN60D2611F.	5-43
A1A8R28		RESISTOR: Same as A1A1R9.	5-43
A1A8R29		RESISTOR: MIL type RC07GF820J.	5-43
A1A8R30		RESISTOR: MIL type RJ22BP202.	5-43
A1A8R31		RESISTOR: Same as A1A6R28.	5-43
A1A8R32		RESISTOR: Same as A1A2R22.	5-43
A1A8R33		RESISTOR: Same as A1A1R9.	5-43
A1A8R34		RESISTOR: Same as A1A6R33.	5-43
A1A8R35		RESISTOR: MIL type RL32AD431J03.	5-43
A1A8R36		RESISTOR: Same as A1A8R29.	5-43
A1A8R37		RESISTOR: MIL type RL20AD221J03.	5-43
A1A8R38		RESISTOR: MIL type RL20AD470J03.	5-43
A1A8R39		RESISTOR: MIL type RL42AD561J.	5-43
A1A8R40		RESISTOR: MIL type RL32AD102J03.	5-43
A1A8R41		RESISTOR: MIL type RL20AD181J03.	5-43
A1A8R42		RESISTOR: Same as A1A2R45.	5-43
A1A8R43		RESISTOR: Same as A1A6R20.	5-43
A1A8R44		RESISTOR: MIL type RL32AD271J03.	5-43
A1A8R45		RESISTOR: Same as A1A6R9.	5-43
A1A9		COUNTER, ELECTRONIC, DIGITAL: Printed circuit board w/all components assembled for operation; mfr CMC, dwg MP90-565L5.	5-44
A1A9C1		CAPACITOR: Same as A1A6C2.	5-44
A1A9C2		CAPACITOR: Same as A1A5C27.	5-44
A1A9C3		CAPACITOR: Same as A1A5C24.	5-44
A1A9C4		CAPACITOR: Same as A1A5C27.	5-44
A1A9C5		CAPACITOR: Same as A1A5C27.	5-44
A1A9C6		CAPACITOR: Same as A1A6C3.	5-44
A1A9C7		CAPACITOR: Same as A1A6C3.	5-44
A1A9C8		CAPACITOR: Same as A1A6C30.	5-44
A1A9C9		CAPACITOR: Same as A1A6C3.	5-44
A1A9C10		CAPACITOR: Same as A1A5C23.	5-44
A1A9C11		CAPACITOR: Same as A1A5C4.	5-44
A1A9C12		CAPACITOR: Same as A1A5C30.	5-44
A1A9C13		CAPACITOR: Same as A1A5C4.	5-44
A1A9C14		CAPACITOR: Same as A1A5C23.	5-44
A1A9C15		CAPACITOR: Same as A1A5C30.	5-44
A1A9C16		CAPACITOR: Same as A1A6C30.	5-44
A1A9C17		CAPACITOR: Same as A1A6C3.	5-44
A1A9C18		CAPACITOR: Same as A1A5C4.	5-44

TABLE 6-1. (Continued)

REF DESIG	NOTES	NAME AND DESCRIPTION	FIG. NO.
A1A9C19		CAPACITOR: Same as A1A6C3.	5-44
A1A9C20		CAPACITOR: Same as A1A6C3.	5-44
A1A9C21		CAPACITOR: Same as A1A6C3.	5-44
A1A9C22		CAPACITOR: Same as A1A6C30.	5-44
A1A9C23		CAPACITOR: Same as A1A6C3.	5-44
A1A9C24		CAPACITOR: Same as A1A6C3.	5-44
A1A9C25		CAPACITOR: Same as A1A6C3.	5-44
A1A6C26		CAPACITOR: Same as A1A6C3.	5-44
A1A9C27		CAPACITOR: Same as A1A6C3.	5-44
A1A9C28		CAPACITOR: Same as A1A6C30.	5-44
A1A9C29		CAPACITOR: Same as A1A6C3.	5-44
A1A9C30		CAPACITOR: Same as A1A5C23.	5-44
A1A9C31		CAPACITOR: Same as A1A5C4.	5-44
A1A9C32		CAPACITOR: Same as A1A5C4.	5-44
A1A9C33		CAPACITOR: Same as A1A5C23.	5-44
A1A9C34		CAPACITOR: Same as A1A5C30.	5-44
A1A9C35		CAPACITOR: Same as A1A6C30.	5-44
A1A9C36		CAPACITOR: Same as A1A6C30.	5-44
A1A9C37		CAPACITOR: Same as A1A6C3.	5-44
A1A9C38		CAPACITOR: Same as A1A5C23.	5-44
A1A9C39		CAPACITOR: Same as A1A5C4.	5-44
A1A9C40		CAPACITOR: Same as A1A5C4.	5-44
A1A9C41		CAPACITOR: Same as A1A5C23.	5-44
A1A9C42		CAPACITOR: Same as A1A6C3.	5-44
A1A9C43		CAPACITOR: Same as A1A6C30.	5-44
A1A9C44		CAPACITOR: Same as A1A6C30.	5-44
A1A9C45		CAPACITOR: Same as A1A6C3.	5-44
A1A9C46		CAPACITOR: Same as A1A5C23.	5-44
A1A9C47		CAPACITOR: Same as A1A5C4.	5-44
A1A9C48		CAPACITOR: Same as A1A5C4.	5-44
A1A9C49		CAPACITOR: Same as A1A5C23.	5-44
A1A9C50		CAPACITOR: Same as A1A6C3.	5-44
A1A9C51		CAPACITOR: Same as A1A6C3.	5-44
A1A9C52		CAPACITOR: Same as A1A6C30.	5-44
A1A9C53		CAPACITOR: Same as A1A6C3.	5-44
A1A9C54		CAPACITOR: Same as A1A6C3.	5-44
A1A9C55		CAPACITOR: Same as A1A6C3.	5-44
A1A9C56		CAPACITOR: Same as A1A6C3.	5-44
A1A9CR1		SEMICONDUCTOR DEVICE, DIODE: Same as A1A8CR11.	5-44
A1A9CR2		SEMICONDUCTOR DEVICE, DIODE: Same as A1A8CR11.	5-44
A1A9CR3		SEMICONDUCTOR DEVICE, DIODE: Same as A1A8CR11.	5-44
A1A9CR4		SEMICONDUCTOR DEVICE, DIODE: Same as A1A8CR11.	5-44
A1A9CR5		SEMICONDUCTOR DEVICE, DIODE: Same as A1A8CR11.	5-44
A1A9CR6		SEMICONDUCTOR DEVICE, DIODE: Same as A1A8CR11.	5-44
A1A9CR7		SEMICONDUCTOR DEVICE, DIODE: Same as A1A1CR15.	5-44
A1A9CR8		SEMICONDUCTOR DEVICE, DIODE: Same as A1A8CR11.	5-44
A1A9CR9		SEMICONDUCTOR DEVICE, DIODE: Same as A1A8CR11.	5-44
A1A9CR10		SEMICONDUCTOR DEVICE, DIODE: Same as A1A8CR11.	5-44
A1A9CR11		SEMICONDUCTOR DEVICE, DIODE: Same as A1A8CR11.	5-44
A1A9CR12		SEMICONDUCTOR DEVICE, DIODE: Same as A1A5CR2.	5-44
A1A9CR13		SEMICONDUCTOR DEVICE, DIODE: Same as A1A8CR11.	5-44
A1A9CR14		SEMICONDUCTOR DEVICE, DIODE: Same as A1A5CR2.	5-44
A1A9CR15		SEMICONDUCTOR DEVICE, DIODE: Same as A1A5CR2.	5-44
A1A9CR16		SEMICONDUCTOR DEVICE, DIODE: Same as A1A8CR11.	5-44
A1A9CR17		SEMICONDUCTOR DEVICE, DIODE: Same as A1A5CR2.	5-44
A1A9CR18		SEMICONDUCTOR DEVICE, DIODE: Same as A1A8CR11.	5-44
A1A9CR19		SEMICONDUCTOR DEVICE, DIODE: Same as A1A8CR11.	5-44

TABLE 6-1. (Continued)

REF DESIG	NOTES	NAME AND DESCRIPTION	FIG. NO.
A1A9CR20		SEMICONDUCTOR DEVICE, DIODE: Same as A1A8CR11.	5-44
A1A9CR21		SEMICONDUCTOR DEVICE, DIODE: Same as A1A8CR11.	5-44
A1A9CR22		SEMICONDUCTOR DEVICE, DIODE: Same as A1A8CR11.	5-44
A1A9CR23		SEMICONDUCTOR DEVICE, DIODE: Same as A1A8CR11.	5-44
A1A9CR24		SEMICONDUCTOR DEVICE, DIODE: Same as A1A8CR11.	5-44
A1A9CR25		SEMICONDUCTOR DEVICE, DIODE: Same as A1A8CR11.	5-44
A1A9CR26		SEMICONDUCTOR DEVICE, DIODE: Same as A1A8CR11.	5-44
A1A9CR27		SEMICONDUCTOR DEVICE, DIODE: Same as A1A8CR11.	5-44
A1A9CR28		SEMICONDUCTOR DEVICE, DIODE: Same as A1A5CR2.	5-44
A1A9CR29		SEMICONDUCTOR DEVICE, DIODE: Same as A1A8CR11.	5-44
A1A9CR30		SEMICONDUCTOR DEVICE, DIODE: Same as A1A8CR11.	5-44
A1A9CR31		SEMICONDUCTOR DEVICE, DIODE: Same as A1A5CR2.	5-44
A1A9CR32		Not Used.	
A1A9CR33		Not Used.	
A1A9CR34		SEMICONDUCTOR DEVICE, DIODE: Same as A1A8CR11.	5-44
A1A9CR35		SEMICONDUCTOR DEVICE, DIODE: Same as A1A8CR11.	5-44
A1A9CR36		SEMICONDUCTOR DEVICE, DIODE: Same as A1A8CR11.	5-44
A1A9CR37		SEMICONDUCTOR DEVICE, DIODE: Same as A1A8CR11.	5-44
A1A9CR38		SEMICONDUCTOR DEVICE, DIODE: Same as A1A8CR11.	5-44
A1A9CR39		SEMICONDUCTOR DEVICE, DIODE: Same as A1A8CR11.	5-44
A1A9CR40		SEMICONDUCTOR DEVICE, DIODE: Same as A1A8CR11.	5-44
A1A9CR41		SEMICONDUCTOR DEVICE, DIODE: Same as A1A5CR2.	5-44
A1A9CR42		SEMICONDUCTOR DEVICE, DIODE: Same as A1A8CR11.	5-44
A1A9CR43		SEMICONDUCTOR DEVICE, DIODE: Same as A1A8CR11.	5-44
A1A9CR44		Not Used.	
A1A9CR45		Not Used.	
A1A9CR46		SEMICONDUCTOR DEVICE, DIODE: Same as A1A5CR2.	5-44
A1A9CR47		SEMICONDUCTOR DEVICE, DIODE: Same as A1A8CR11.	5-44
A1A9CR48		SEMICONDUCTOR DEVICE, DIODE: Same as A1A8CR11.	5-44
A1A9CR49		SEMICONDUCTOR DEVICE, DIODE: Same as A1A8CR11.	5-44
A1A9CR50		SEMICONDUCTOR DEVICE, DIODE: Same as A1A8CR11.	5-44
A1A9CR51		SEMICONDUCTOR DEVICE, DIODE: Same as A1A8CR11.	5-44
A1A9CR52		SEMICONDUCTOR DEVICE, DIODE: Same as A1A8CR11.	5-44
A1A9CR53		SEMICONDUCTOR DEVICE, DIODE: Same as A1A8CR11.	5-44
A1A9CR54		SEMICONDUCTOR DEVICE, DIODE: Same as A1A8CR11.	5-44
A1A9CR55		SEMICONDUCTOR DEVICE, DIODE: Same as A1A5CR2.	5-44
A1A9CR56		SEMICONDUCTOR DEVICE, DIODE: Same as A1A8CR11.	5-44
A1A9CR57		SEMICONDUCTOR DEVICE, DIODE: Same as A1A8CR11.	5-44
A1A9CR58		SEMICONDUCTOR DEVICE, DIODE: Same as A1A5CR2.	5-44
A1A9CR59		Not Used.	
A1A9CR60		Not Used.	
A1A9CR61		SEMICONDUCTOR DEVICE, DIODE: Same as A1A8CR11.	5-44
A1A9CR62		SEMICONDUCTOR DEVICE, DIODE: Same as A1A8CR11.	5-44
A1A9CR63		SEMICONDUCTOR DEVICE, DIODE: Same as A1A8CR11.	5-44
A1A9E1		TERMINAL, STUD, TP1: Same as A1A1E1.	5-44
A1A9E2		TERMINAL, STUD, TP2: Same as A1A1E1.	5-44
A1A9E3		TERMINAL, STUD, TP3: Same as A1A1E1.	5-44
A1A9E4		TERMINAL, STUD, TP4: Same as A1A1E1.	5-44
A1A9E5		TERMINAL, STUD, TP5: Same as A1A1E1	5-44
A1A9E6		TERMINAL, STUD: 0.475 inch long, largest dia. 0.094 inch, fits into 0.043 inch hole, brass; mfr CMC, dwg MP4404186.	5-44
A1A9E7 to A1A9E67		TERMINAL, STUD: Same as A1A9MP2.	5-44
A1A9L1		COIL, RADIO FREQUENCY: 0.15 μh ±20%, 0.25 watt, molded core; mfr DEL, P/N 1025-00.	5-44
A1A9L2		COIL, RADIO FREQUENCY: 0.33 μh ±10%, 0.25 watt, molded core; mfr DEL, P/N 1025-08.	5-44

TABLE 6-1. (Continued)

REF DESIG	NOTES	NAME AND DESCRIPTION	FIG. NO.
A1A9L3		COIL: Same as A1A9L2.	5-44
A1A9L4		COIL, RADIO FREQUENCY: MIL type MS18130-4.	5-44
A1A9L5		COIL: Same as A1A9L1.	5-44
A1A9L6		COIL, RADIO FREQUENCY: 0.22 μh ±10%, 0.25 watt, molded core; mfr DEL, P/N 1025-04.	5-44
A1A9L7		COIL: Same as A1A9L2.	5-44
A1A9L8		Not Used.	5-44
A1A9L9		COIL: Same as A1A9L2.	5-44
A1A9L10		COIL: Same as A1A9L4.	5-44
A1A9L11		COIL: Same as A1A9L4.	5-44
A1A9L12		COIL: Same as A1A9L2.	5-44
A1A9L13		COIL: Same as A1A9L2.	5-44
A1A9L14		COIL: Same as A1A9L4.	5-44
A1A9L15		COIL: Same as A1A9L4.	5-44
A1A9L16		COIL: Same as A1A9L2.	5-44
A1A9L17		COIL: Same as A1A9L2.	5-44
A1A9L18		COIL: Same as A1A9L4.	5-44
A1A9L19		COIL: Same as A1A9L4.	5-44
A1A9L20		COIL: Same as A1A9L2.	5-44
A1A9MP1		Not Used.	
A1A9Q1		TRANSISTOR: Same as A1A8Q8.	5-44
A1A9Q2		TRANSISTOR: Same as A1A8Q13.	5-44
A1A9Q3		TRANSISTOR: Same as A1A8Q13.	5-44
A1A9Q4		TRANSISTOR: Same as A1A8Q13.	5-44
A1A9Q5		TRANSISTOR: Type 2N2894; mfr CMC, dwg MP4906096.	5-44
A1A9Q6		TRANSISTOR: Same as A1A8Q13.	5-44
A1A9Q7		TRANSISTOR: Same as A1A8Q13.	5-44
A1A9Q8		TRANSISTOR: Same as A1A8Q13.	5-44
A1A9Q9		TRANSISTOR: Same as A1A8Q13.	5-44
A1A9Q10		TRANSISTOR: Same as A1A8Q8.	5-44
A1A9Q11		TRANSISTOR: Same as A1A8Q8.	5-44
A1A9Q12		TRANSISTOR: Same as A1A9Q5.	5-44
A1A9Q13		TRANSISTOR: Same as A1A8Q8.	5-44
A1A9Q14		TRANSISTOR: Same as A1A8Q8.	5-44
A1A9Q15		TRANSISTOR: Same as A1A8Q8.	5-44
A1A9Q16		TRANSISTOR: Same as A1A8Q8.	5-44
A1A9Q17		TRANSISTOR: Same as A1A8Q8.	5-44
A1A9Q18		TRANSISTOR: Same as A1A8Q8.	5-44
A1A9Q19		TRANSISTOR: Same as A1A8Q8.	5-44
A1A9Q20		TRANSISTOR: Same as A1A8Q8.	5-44
A1A9Q21		TRANSISTOR: Same as A1A8Q8.	5-44
A1A9Q22		TRANSISTOR: Same as A1A8Q8.	5-44
A1A9Q23		TRANSISTOR: Same as A1A8Q8.	5-44
A1A9Q24		TRANSISTOR: Same as A1A8Q8.	5-44
A1A9Q25		TRANSISTOR: Same as A1A8Q8.	5-44
A1A9Q26		TRANSISTOR: Same as A1A8Q8.	5-44
A1A9R1		RESISTOR: Same as A1A1R9.	5-44
A1A9R2		RESISTOR: Same as A1A2R1.	5-44
A1A9R3		RESISTOR: Same as A1A5R28.	5-44
A1A9R4		RESISTOR: Same as A1A1R14.	5-44
A1A9R5		RESISTOR: Same as A1A2R44.	5-44
A1A9R6		RESISTOR: Same as A1A1R6.	5-44
A1A9R7		RESISTOR: Same as A1A2R4.	5-44
A1A9R8		RESISTOR: Same as A1A6R33.	5-44
A1A9R9		RESISTOR: Same as A1A1R6.	5-44
A1A9R10		RESISTOR: Same as A1A6R30.	5-44
A1A9R11		RESISTOR: MIL type RJ22BP102.	5-44

TABLE 6-1. (Continued)

REF DESIG	NOTES	NAME AND DESCRIPTION	FIG. NO.
A1A9R12		RESISTOR: Same as A1A8R29.	5-44
A1A9R13		RESISTOR: MIL type RW69V750.	5-44
A1A9R14		RESISTOR: MIL type RC07GF271J.	5-44
A1A9R15		RESISTOR: Same as A1A2R4.	5-44
A1A9R16		RESISTOR: Same as A1A5R38.	5-44
A1A9R17		RESISTOR: Same as A1A6R33.	5-44
A1A9R18		RESISTOR: Same as A1A9R14.	5-44
A1A9R18		RESISTOR: Same as A1A2R22.	5-44
A1A9R20		RESISTOR: Same as A1A2R3.	5-44
A1A9R21		RESISTOR: Same as A1A2R44.	5-44
A1A9R22		RESISTOR: Same as A1A5R47.	5-44
A1A9R23		RESISTOR: Same as A1A5R47.	5-44
A1A9R24		RESISTOR: Same as A1A2R44.	5-44
A1A9R25		RESISTOR: Same as A1A9R14.	5-44
A1A9R26		RESISTOR: Same as A1A5R38.	5-44
A1A9R27		RESISTOR: Same as A1A2R4.	5-44
A1A9R28		RESISTOR: Same as A1A1R9.	5-44
A1A9R29		RESISTOR: Same as A1A7R16.	5-44
A1A9R30		RESISTOR: Same as A1A2R1.	5-44
A1A9R31		RESISTOR: Same as A1A1R14.	5-44
A1A9R32		RESISTOR: Same as A1A1R9.	5-44
A1A9R33		RESISTOR: Same as A1A1R9.	5-44
A1A9R34		RESISTOR: Same as A1A1R9.	5-44
A1A9R35		RESISTOR: Same as A1A8R29.	5-44
A1A9R36		RESISTOR: Same as A1A9R14.	5-44
A1A9R37		RESISTOR: Same as A1A2R4.	5-44
A1A9R38		RESISTOR: Same as A1A5R38.	5-44
A1A9R39		RESISTOR: Same as A1A6R33.	5-44
A1A9R40		RESISTOR: MIL type RC07GF181J.	5-44
A1A9R41		RESISTOR: Same as A1A2R44.	5-44
A1A9R42		RESISTOR: Same as A1A5R47.	5-44
A1A9R43		RESISTOR: Same as A1A5R47.	5-44
A1A9R44		RESISTOR: Same as A1A2R3.	5-44
A1A9R45		RESISTOR: Same as A1A2R44.	5-44
A1A9R46		RESISTOR: Same as A1A9R40.	5-44
A1A9R47		RESISTOR: Same as A1A2R22.	5-44
A1A9R48		RESISTOR: Same as A1A6R33.	5-44
A1A9R49		RESISTOR: Same as A1A5R38.	5-44
A1A9R50		RESISTOR: Same as A1A2R4.	5-44
A1A9R51		RESISTOR: Same as A1A2R4.	5-44
A1A9R52		RESISTOR: Same as A1A5R38.	5-44
A1A9R53		RESISTOR: Same as A1A6R33.	5-44
A1A9R54		RESISTOR: Same as A1A9R40.	5-44
A1A9R55		RESISTOR: Same as A1A2R44.	5-44
A1A9R56		RESISTOR: Same as A1A5R47.	5-44
A1A9R57		RESISTOR: Same as A1A5R47.	5-44
A1A9R58		RESISTOR: Same as A1A2R3.	5-44
A1A9R59		RESISTOR: Same as A1A2R44.	5-44
A1A9R60		RESISTOR: Same as A1A9R40.	5-44
A1A9R61		RESISTOR: Same as A1A2R22.	5-44
A1A9R62		RESISTOR: Same as A1A6R33.	5-44
A1A9R63		RESISTOR: Same as A1A5R38.	5-44
A1A9R64		RESISTOR: Same as A1A2R4.	5-44
A1A9R65		RESISTOR: Same as A1A9R14.	5-44
A1A9R66		RESISTOR: Same as A1A9R14.	5-44
A1A9R67		RESISTOR: Same as A1A2R4.	5-44
A1A9R68		RESISTOR: Same as A1A5R38.	5-44

TABLE 6-1. (Continued)

REF DESIG	NOTES	NAME AND DESCRIPTION	FIG. NO.
A1A9R69		RESISTOR: Same as A1A6R33.	5-44
A1A9R70		RESISTOR: Same as A1A9R40.	5-44
A1A9R71		RESISTOR: Same as A1A2R44.	5-44
A1A9R72		RESISTOR: Same as A1A5R47.	5-44
A1A9R73		RESISTOR: Same as A1A5R47.	5-44
A1A9R74		RESISTOR: Same as A1A2R3.	5-44
A1A9R75		RESISTOR: Same as A1A2R44.	5-44
A1A9R76		RESISTOR: Same as A1A9R40.	5-44
A1A9R77		RESISTOR: Same as A1A2R22.	5-44
A1A9R78		RESISTOR: Same as A1A6R33.	5-44
A1A9R79		RESISTOR: Same as A1A5R38.	5-44
A1A9R80		RESISTOR: Same as A1A2R4.	5-44
A1A9R81		RESISTOR: Same as A1A7R16.	5-44
A1A9R82		RESISTOR: Same as A1A6R33.	5-44
A1A9R83		RESISTOR: Same as A1A1R9.	5-44
A1A9R84		RESISTOR: MIL type RC07GF221J.	5-44
A1A9R85		RESISTOR: Same as A1A9R84.	5-44
A1A9R86		RESISTOR: Same as A1A9R84.	5-44
A1A10		GATE, ELECTRONIC: Printed circuit board w/all components assembled for operation; mfr CMC, dwg MP17-525L4.	5-45
A1A10C1		CAPACITOR: Same as A1A6C3.	5-45
A1A10C2		CAPACITOR: Same as A1A7C5.	5-45
A1A10C3		CAPACITOR: Same as A1A7C3.	5-45
A1A10C4		CAPACITOR: Same as A1A6C3.	5-45
A1A10C5		CAPACITOR: Same as A1A7C10.	5-45
A1A10C6		CAPACITOR: Same as A1A7C3.	5-45
A1A10C7		CAPACITOR: Same as A1A5C24.	5-45
A1A10C8		CAPACITOR: Same as A1A7C3.	5-45
A1A10C9		CAPACITOR: Same as A1A6C3.	5-45
A1A10C10		CAPACITOR: Same as A1A6C45.	5-45
A1A10C11		CAPACITOR: Same as A1A5C4.	5-45
A1A10C12		CAPACITOR: Same as A1A5C25.	5-45
A1A10C13		CAPACITOR: Same as A1A6C3.	5-45
A1A10C14		CAPACITOR: Same as A1A6C30.	5-45
A1A10C15		CAPACITOR: Same as A1A5C4.	5-45
A1A10C16		CAPACITOR: Same as A1A5C30.	5-45
A1A10C17		CAPACITOR: Same as A1A6C3.	5-45
A1A10C18		CAPACITOR: Same as A1A5C30.	5-45
A1A10C19		CAPACITOR: Same as A1A6C30.	5-45
A1A10C20		CAPACITOR: Same as A1A5C24.	5-45
A1A10C21		CAPACITOR: Same as A1A5C4.	5-45
A1A10C22		CAPACITOR: Same as A1A5C25.	5-45
A1A10C23		Not Used.	
A1A10C24		CAPACITOR: Same as A1A6C3.	5-45
A1A10C25		CAPACITOR: Same as A1A6C3.	5-45
A1A10C26		CAPACITOR: Same as A1A6C3.	5-45
A1A10CR1		SEMICONDUCTOR DEVICE, DIODE: Same as A1A2CR1.	5-45
A1A10CR2		SEMICONDUCTOR DEVICE, DIODE: Same as A1A2CR1.	5-45
A1A10CR3		SEMICONDUCTOR DEVICE, DIODE: Same as A1A2CR1.	5-45
A1A10CR4		SEMICONDUCTOR DEVICE, DIODE: Same as A1A2CR1.	5-45
A1A10CR5		SEMICONDUCTOR DEVICE, DIODE: MIL type 1N754A.	5-45
A1A10CR6		SEMICONDUCTOR DEVICE, DIODE: Same as A1A2CR1.	5-45
A1A10CR7		SEMICONDUCTOR DEVICE, DIODE: Same as A1A2CR1.	5-45
A1A10CR8		SEMICONDUCTOR DEVICE, DIODE: Same as A1A2CR1.	5-45
A1A10CR9		SEMICONDUCTOR DEVICE, DIODE: Same as A1A8CR1.	5-45
A1A10CR10		SEMICONDUCTOR DEVICE, DIODE: Same as A1A8CR11.	5-45
A1A10CR11		SEMICONDUCTOR DEVICE, DIODE: Same as A1A5CR2.	5-45

TABLE 6-1. (Continued)

REF DESIG	NOTES	NAME AND DESCRIPTION	FIG. NO.
A1A10CR12		SEMICONDUCTOR DEVICE, DIODE: Same as A1A5CR2.	5-45
A1A10CR13		SEMICONDUCTOR DEVICE, DIODE: Same as A1A5CR2.	5-45
A1A10CR14		SEMICONDUCTOR DEVICE, DIODE: Same as A1A5CR2.	5-45
A1A10CR15		SEMICONDUCTOR DEVICE, DIODE: Same as A1A5CR2.	5-45
A1A10CR16		SEMICONDUCTOR DEVICE, DIODE: Same as A1A5CR2.	5-45
A1A10CR17		SEMICONDUCTOR DEVICE, DIODE: Same as A1A5CR2.	5-45
A1A10CR18		SEMICONDUCTOR DEVICE, DIODE: Same as A1A5CR2.	5-45
A1A10CR19		SEMICONDUCTOR DEVICE, DIODE: Same as A1A5CR2.	5-45
A1A10CR20		SEMICONDUCTOR DEVICE, DIODE: Same as A1A5CR2.	5-45
A1A10CR21		SEMICONDUCTOR DEVICE, DIODE: Same as A1A8CR11.	5-45
A1A10CR22		SEMICONDUCTOR DEVICE, DIODE: Same as A1A5CR2.	5-45
A1A10CR23		SEMICONDUCTOR DEVICE, DIODE: Same as A1A5CR2.	5-45
A1A10E1		TERMINAL, STUD, TP1: Same as A1A1E1.	5-45
A1A10E2		TERMINAL, STUD, TP2: Same as A1A1E1.	5-45
A1A10E3		TERMINAL, STUD, TP3: Same as A1A1E1.	5-45
A1A10E4		TERMINAL, STUD, TP4: Same as A1A1E1.	5-45
A1A10E5		TERMINAL, STUD, TP5: Same as A1A1E1.	5-45
A1A10Q1		TRANSISTOR: Same as A1A1Q8.	5-45
A1A10Q2		TRANSISTOR: Same as A1A1Q4.	5-45
A1A10Q3		TRANSISTOR: MIL type 2N1184B.	5-45
A1A10Q4		TRANSISTOR: Same as A1A1Q4.	5-45
A1A10Q5		TRANSISTOR: Same as A1A5Q1.	5-45
A1A10Q6		TRANSISTOR: Same as A1A5Q1.	5-45
A1A10Q7		TRANSISTOR: Same as A1A1Q8.	5-45
A1A10Q8		TRANSISTOR: Same as A1A8Q8.	5-45
A1A10Q9		TRANSISTOR: Same as A1A1Q8.	5-45
A1A10Q10		TRANSISTOR: Same as A1A1Q4.	5-45
A1A10Q11		TRANSISTOR: Same as A1A5Q1.	5-45
A1A10Q12		TRANSISTOR: Same as A1A8Q8.	5-45
A1A10Q13		TRANSISTOR: Same as A1A5Q1.	5-45
A1A10Q14		TRANSISTOR: Same as A1A8Q8.	5-45
A1A10Q15		TRANSISTOR: Same as A1A5Q1.	5-45
A1A10Q16		TRANSISTOR: Same as A1A1Q4.	5-45
A1A10Q17		TRANSISTOR: Same as A1A5Q1.	5-45
A1A10Q18		TRANSISTOR: Same as A1A8Q6.	5-45
A1A10Q19		TRANSISTOR: Same as A1A8Q8.	5-45
A1A10R1		RESISTOR: Same as A1A2R3.	5-45
A1A10R2		RESISTOR: Same as A1A2R6.	5-45
A1A10R3		RESISTOR: Same as A1A6R28.	5-45
A1A10R4		RESISTOR: MIL type RL20AD561J.	5-45
A1A10R5		RESISTOR: MIL type RL20AD102J.	5-45
A1A10R6		RESISTOR: MIL type RL32AD330J.	5-45
A1A10R7		RESISTOR: Same as A1A2R22.	5-45
A1A10R8		RESISTOR: Same as A1A2R44.	5-45
A1A10R9		RESISTOR: Same as A1A2R42.	5-45
A1A10R10		RESISTOR: Same as A1A2R6.	5-45
A1A10R11		RESISTOR: Same as A1A8R31.	5-45
A1A10R12		RESISTOR: Same as A1A1R6.	5-45
A1A10R13		RESISTOR: Same as A1A1R6.	5-45
A1A10R14		RESISTOR: Same as A1A1R7.	5-45
A1A10R15		RESISTOR: Same as A1A6R33.	5-45
A1A10R16		RESISTOR: Same as A1A2R1.	5-45
A1A10R17		RESISTOR: Same as A1A6R9.	5-45
A1A10R18		RESISTOR: Same as A1A1R6.	5-45
A1A10R19		RESISTOR: Same as A1A2R6.	5-45
A1A10R20		RESISTOR: Same as A1A2R1.	5-45
A1A10R21		RESISTOR: Same as A1A1R6.	5-45

TABLE 6-1. (Continued)

REF DESIG	NOTES	NAME AND DESCRIPTION	FIG. NO.
A1A10R22		RESISTOR: Same as A1A2R45.	5-45
A1A10R23		RESISTOR: MIL type RL20AD271J.	5-45
A1A10R24		RESISTOR: Same as A1A2R45.	5-45
A1A10R25		RESISTOR: Same as A1A6R30.	5-45
A1A10R26		RESISTOR: MIL type RL20AD821J.	5-45
A1A10R27		RESISTOR: Same as A1A6R28.	5-45
A1A10R28		RESISTOR: Same as A1A2R42.	5-45
A1A10R29		RESISTOR: MIL type RL32AD391J.	5-45
A1A10R30		RESISTOR: Same as A1A6R20.	5-45
A1A10R31		RESISTOR: Same as A1A7R9.	5-45
A1A10R32		RESISTOR: Same as A1A2R44.	5-45
A1A10R33		RESISTOR: Same as A1A6R9.	5-45
A1A10R34		RESISTOR: MIL type RC07GF823J.	5-45
A1A10R35		RESISTOR: Same as A1A10R34.	5-45
A1A10R36		RESISTOR: Same as A1A2R3.	5-45
A1A10R37		RESISTOR: Same as A1A10R34.	5-45
A1A10R38		RESISTOR: Same as A1A10R34.	5-45
A1A10R39		RESISTOR: Same as A1A2R4.	5-45
A1A10R40		RESISTOR: Same as A1A6R9.	5-45
A1A10R41		RESISTOR: Same as A1A2R44.	5-45
A1A10R42		RESISTOR: Same as A1A2R22.	5-45
A1A10R43		RESISTOR: Same as A1A1R22.	5-45
A1A10R44		RESISTOR: MIL type RC07GF104J.	5-45
A1A10R45		RESISTOR: Same as A1A10R29.	5-45
A1A10R46		RESISTOR: Same as A1A2R1.	5-45
A1A10R47		RESISTOR: Same as A1A2R1.	5-45
A1A10R48		RESISTOR: Same as A1A6R20.	5-45
A1A10R49		RESISTOR: Same as A1A7R9.	5-45
A1A10R50		RESISTOR: Same as A1A1R7.	5-45
A1A10R51		RESISTOR: Same as A1A1R6.	5-45
A1A10R52		RESISTOR: MIL type RL32AD121J.	5-45
A1A11		AMPLIFIER, AUDIO FREQUENCY–RADIO FREQUENCY: Printed circuit board w/all components assembled for operation; mfr CMC, dwg MP14-546L4.	5-46
A1A11C1		Not Used.	
A1A11C2		CAPACITOR: Same as A1A2C1.	5-46
A1A11C3		CAPACITOR: Same as A1A8C1.	5-46
A1A11C4		CAPACITOR: Same as A1A1C2.	5-46
A1A11C5		CAPACITOR: Same as A1A1C2.	5-46
A1A11C6		CAPACITOR: Same as A1A5C27.	5-46
A1A11C7		CAPACITOR: Same as A1A1C2.	5-46
A1A11C8		CAPACITOR: Same as A1A5C24.	5-46
A1A11C9		CAPACITOR: Same as A1A5C25.	5-46
A1A11C10		CAPACITOR: Same as A1A1C2.	5-46
A1A11C11		CAPACITOR: Same as A1A1C2.	5-46
A1A11C12		CAPACITOR: Same as A1A5C3.	5-46
A1A11C13		CAPACITOR: Same as A1A5C3.	5-46
A1A11C14		CAPACITOR: Same as A1A1C2.	5-46
A1A11C15		Not Used.	
A1A11C16		CAPACITOR: Same as A1A2C1.	5-46
A1A11C17		CAPACITOR: Same as A1A8C1.	5-46
A1A11C18		CAPACITOR: Same as A1A1C2.	5-46
A1A11C19		CAPACITOR: Same as A1A1C2.	5-46
A1A11C20		CAPACITOR: Same as A1A5C27.	5-46
A1A11C21		CAPACITOR: Same as A1A1C2.	5-46
A1A11C22		CAPACITOR: Same as A1A5C24.	5-46
A1A11C23		CAPACITOR: Same as A1A5C25.	5-46

TABLE 6-1. (Continued)

REF DESIG	NOTES	NAME AND DESCRIPTION	FIG. NO.
A1A11C24		CAPACITOR: Same as A1A1C2.	5-46
A1A11C25		CAPACITOR: Same as A1A1C2.	5-46
A1A11C26		CAPACITOR: Same as A1A5C3.	5-46
A1A11C27		CAPACITOR: Same as A1A5C3.	5-46
A1A11C28		CAPACITOR: Same as A1A1C2.	5-46
A1A11CR1		SEMICONDUCTOR DEVICE, DIODE: MIL type 1N753A.	5-46
A1A11CR2		SEMICONDUCTOR DEVICE, DIODE: Same as A1A1CR13.	5-46
A1A11CR3		SEMICONDUCTOR DEVICE, DIODE: Same as A1A1CR13.	5-46
A1A11CR4		SEMICONDUCTOR DEVICE, DIODE: Same as A1A5CR2.	5-46
A1A11CR5		SEMICONDUCTOR DEVICE, DIODE: Same as A1A2CR1.	5-46
A1A11CR6		SEMICONDUCTOR DEVICE, DIODE: Same as A1A2CR1.	5-46
A1A11CR7		SEMICONDUCTOR DEVICE, DIODE: Same as A1A5CR2.	5-46
A1A11CR8		SEMICONDUCTOR DEVICE, DIODE: Same as A1A2CR1.	5-46
A1A11CR9		SEMICONDUCTOR DEVICE, DIODE: Same as A1A2CR1.	5-46
A1A11CR10		SEMICONDUCTOR DEVICE, DIODE: Same as A1A2CR1.	5-46
A1A11CR11		SEMICONDUCTOR DEVICE, DIODE: Same as A1A11CR1.	5-46
A1A11CR12		SEMICONDUCTOR DEVICE, DIODE: Same as A1A1CR13.	5-46
A1A11CR13		SEMICONDUCTOR DEVICE, DIODE: Same as A1A1CR13.	5-46
A1A11CR14		SEMICONDUCTOR DEVICE, DIODE: Same as A1A5CR2.	5-46
A1A11CR15		SEMICONDUCTOR DEVICE, DIODE: Same as A1A2CR1.	5-46
A1A11CR16		SEMICONDUCTOR DEVICE, DIODE: Same as A1A2CR1.	5-46
A1A11CR17		SEMICONDUCTOR DEVICE, DIODE: Same as A1A5CR2.	5-46
A1A11CR18		SEMICONDUCTOR DEVICE, DIODE: Same as A1A2CR1.	5-46
A1A11CR19		SEMICONDUCTOR DEVICE, DIODE: Same as A1A2CR1.	5-46
A1A11CR20		SEMICONDUCTOR DEVICE, DIODE: Same as A1A2CR1.	5-46
A1A11E1		TERMINAL, STUD, TP1: Same as A1A1E1.	5-46
A1A11E2		TERMINAL, STUD, TP2: Same as A1A1E1.	5-46
A1A11E3		TERMINAL, STUD, TP3: Same as A1A1E1.	5-46
A1A11E4		TERMINAL, STUD, TP4: Same as A1A1E1.	5-46
A1A11E5		TERMINAL, STUD, TP5: Same as A1A1E1.	5-46
A1A11E6		TERMINAL, STUD, TP6: Same as A1A1E1.	5-46
A1A11J1		CONNECTOR, RECEPTACLE, ELECTRICAL: Same as A1A8J1.	5-46
A1A11J2		CONNECTOR, RECEPTACLE, ELECTRICAL: Same as A1A8J1.	5-46
A1A11Q1		TRANSISTOR: Type 2N3330; mfr CMC, dwg MP4906106.	5-46
A1A11Q2		TRANSISTOR: Same as A1A5Q1.	5-46
A1A11Q3		TRANSISTOR: Same as A1A5Q1.	5-46
A1A11Q4		TRANSISTOR: Same as A1A8Q6.	5-46
A1A11Q5		TRANSISTOR: Same as A1A5Q1.	5-46
A1A11Q6		TRANSISTOR: Same as A1A5Q1.	5-46
A1A11Q7		TRANSISTOR: Same as A1A5Q1.	5-46
A1A11Q8		TRANSISTOR: Same as A1A5Q1.	5-46
A1A11Q9		TRANSISTOR: Same as A1A11Q1.	5-46
A1A11Q10		TRANSISTOR: Same as A1A5Q1.	5-46
A1A11Q11		TRANSISTOR: Same as A1A5Q1.	5-46
A1A11Q12		TRANSISTOR: Same as A1A8Q6.	5-46
A1A11Q13		TRANSISTOR: Same as A1A5Q1.	5-46
A1A11Q14		TRANSISTOR: Same as A1A5Q1.	5-46
A1A11Q15		TRANSISTOR: Same as A1A5Q1.	5-46
A1A11Q16		TRANSISTOR: Same as A1A5Q1.	5-46
A1A11R1		RESISTOR: MIL type RL20AD183J.	5-46
A1A11R2		RESISTOR: MIL type RC07GF824J.	5-46
A1A11R3		RESISTOR: Same as A1A1R6.	5-46
A1A11R4		RESISTOR: Same as A1A1R6.	5-46
A1A11R5		RESISTOR: Same as A1A6R3.	5-46
A1A11R6		RESISTOR: Same as A1A9R11.	5-46
A1A11R7		RESISTOR: MIL type RC07GF471J.	5-46
A1A11R8		RESISTOR: MIL type RN60D5360F.	5-46

TABLE 6-1. (Continued)

REF DESIG	NOTES	NAME AND DESCRIPTION	FIG. NO.
A1A11R9		RESISTOR: Same as A1A1R16.	5-46
A1A11R10		RESISTOR: Same as A1A9R14.	5-46
A1A11R11		RESISTOR: Same as A1A5R44.	5-46
A1A11R12		RESISTOR: Same as A1A11R7.	5-46
A1A11R13		RESISTOR: Same as A1A6R3.	5-46
A1A11R14		RESISTOR: Same as A1A1R6.	5-46
A1A11R15		RESISTOR: Same as A1A1R14.	5-46
A1A11R16		RESISTOR: Same as A1A8R29.	5-46
A1A11R17		RESISTOR: Same as A1A1R7.	5-46
A1A11R18		RESISTOR: MIL type RL20AD820J.	5-46
A1A11R19		RESISTOR: MIL type RN60D4020F.	5-46
A1A11R20		RESISTOR: Same as A1A2R3.	5-46
A1A11R21		RESISTOR: Same as A1A6R30.	5-46
A1A11R22		RESISTOR: Same as A1A7R18.	5-46
A1A11R23		RESISTOR: Same as A1A2R3.	5-46
A1A11R24		RESISTOR: Same as A1A6R33.	5-46
A1A11R25		RESISTOR: Same as A1A1R6.	5-46
A1A11R26		RESISTOR: Same as A1A2R1.	5-46
A1A11R27		RESISTOR: Same as A1A2R3.	5-46
A1A11R28		RESISTOR: Same as A1A2R22.	5-46
A1A11R29		RESISTOR: Same as A1A2R22.	5-46
A1A11R30		RESISTOR: Same as A1A6R3.	5-46
A1A11R31		RESISTOR: Same as A1A1R6.	5-46
A1A11R32		RESISTOR: Same as A1A2R4.	5-46
A1A11R33		RESISTOR: Same as A1A2R4.	5-46
A1A11R34		RESISTOR: Same as A1A2R3.	5-46
A1A11R35		RESISTOR: Same as A1A2R3.	5-46
A1A11R36		RESISTOR: Same as A1A2R6.	5-46
A1A11R37		RESISTOR: Same as A1A1R22.	5-46
A1A11R38		RESISTOR: Same as A1A11R1.	5-46
A1A11R39		RESISTOR: Same as A1A11R2.	5-46
A1A11R40		RESISTOR: Same as A1A1R6.	5-46
A1A11R41		RESISTOR: Same as A1A1R6.	5-46
A1A11R42		RESISTOR: Same as A1A6R3.	5-46
A1A11R43		RESISTOR: Same as A1A9R11.	5-46
A1A11R44		RESISTOR: Same as A1A11R7.	5-46
A1A11R45		RESISTOR: Same as A1A11R8.	5-46
A1A11R46		RESISTOR: Same as A1A11R16.	5-46
A1A11R47		RESISTOR: Same as A1A9R14.	5-46
A1A11R48		RESISTOR: Same as A1A5R44.	5-46
A1A11R49		RESISTOR: Same as A1A11R7.	5-46
A1A11R50		RESISTOR: Same as A1A6R3.	5-46
A1A11R51		RESISTOR: Same as A1A1R6.	5-46
A1A11R52		RESISTOR: Same as A1A1R14.	5-46
A1A11R53		RESISTOR: Same as A1A8R29.	5-46
A1A11R54		RESISTOR: Same as A1A1R7.	5-46
A1A11R55		RESISTOR: Same as A1A11R18.	5-46
A1A11R56		RESISTOR: Same as A1A11R19.	5-46
A1A11R57		RESISTOR: Same as A1A2R3.	5-46
A1A11R58		RESISTOR: Same as A1A6R30.	5-46
A1A11R59		RESISTOR: Same as A1A7R18.	5-46
A1A11R60		RESISTOR: Same as A1A2R3.	5-46
A1A11R61		RESISTOR: Same as A1A5R43.	5-46
A1A11R62		RESISTOR: Same as A1A1R6.	5-46
A1A11R63		RESISTOR: Same as A1A2R1.	5-46
A1A11R64		RESISTOR: Same as A1A2R4.	5-46
A1A11R65		RESISTOR: Same as A1A2R22.	5-46

TABLE 6-1. (Continued)

REF DESIG	NOTES	NAME AND DESCRIPTION	FIG. NO.
A1A11R66		RESISTOR: Same as A1A2R22.	5-46
A1A11R67		RESISTOR: Same as A1A6R3.	5-46
A1A11R68		RESISTOR: Same as A1A1R6.	5-46
A1A11R69		RESISTOR: Same as A1A2R4.	5-46
A1A11R70		RESISTOR: Same as A1A2R4.	5-46
A1A11R71		RESISTOR: Same as A1A2R3.	5-46
A1A11R72		RESISTOR: Same as A1A2R3.	5-46
A1A11R73		RESISTOR: Same as A1A2R6.	5-46
A1A11R74		RESISTOR: Same as A1A2R5.	5-46
A1A12		FREQUENCY DIVIDER-DIGITAL DISPLAY INDICATOR: Printed circuit board w/all components assembled for operation; mfr CMC, dwg MP96-501L5.	5-47
A1A12C1		CAPACITOR: Same as A1A2C1.	5-47
A1A12C2		CAPACITOR: Same as A1A2C1.	5-47
A1A12C3		CAPACITOR: Same as A1A2C3.	5-47
A1A12C4		CAPACITOR: Same as A1A2C3.	5-47
A1A12C5		CAPACITOR: Same as A1A2C3.	5-47
A1A12C6		CAPACITOR: Same as A1A2C1.	5-47
A1A12C7		CAPACITOR: Same as A1A2C1.	5-47
A1A12C8		CAPACITOR: Same as A1A2C3.	5-47
A1A12C9		CAPACITOR: Same as A1A2C3.	5-47
A1A12C10		CAPACITOR: Same as A1A2C1.	5-47
A1A12C11		CAPACITOR: Same as A1A2C1.	5-47
A1A12C12		CAPACITOR: Same as A1A2C3.	5-47
A1A12C13		CAPACITOR: Same as A1A2C3.	5-47
A1A12C14		CAPACITOR: Same as A1A2C1.	5-47
A1A12C15		CAPACITOR: Same as A1A2C1.	5-47
A1A12C16		CAPACITOR: Same as A1A2C3.	5-47
A1A12C17		CAPACITOR: Same as A1A1C2.	5-47
A1A12C18		CAPACITOR: Same as A1A1C2.	5-47
A1A12C19		CAPACITOR: Same as A1A5C25.	5-47
A1A12CR1		SEMICONDUCTOR DEVICE, DIODE: Same as A1A2CR1.	5-47
A1A12CR2		SEMICONDUCTOR DEVICE, DIODE: Same as A1A2CR1.	5-47
A1A12CR3		SEMICONDUCTOR DEVICE, DIODE: Same as A1A2CR1.	5-47
A1A12CR4		SEMICONDUCTOR DEVICE, DIODE: Same as A1A2CR1.	5-47
A1A12CR5		SEMICONDUCTOR DEVICE, DIODE: Same as A1A2CR1.	5-47
A1A12CR6		SEMICONDUCTOR DEVICE, DIODE: Same as A1A2CR1.	5-47
A1A12CR7		SEMICONDUCTOR DEVICE, DIODE: Same as A1A2CR1.	5-47
A1A12CR8		SEMICONDUCTOR DEVICE, DIODE: Same as A1A2CR1.	5-47
A1A12RC9		SEMICONDUCTOR DEVICE, DIODE: Same as A1A2CR1.	5-47
A1A12CR10		SEMICONDUCTOR DEVICE, DIODE: Same as A1A2CR1.	5-47
A1A12CR11		SEMICONDUCTOR DEVICE, DIODE: Same as A1A2CR1.	5-47
A1A12CR12		SEMICONDUCTOR DEVICE, DIODE: Same as A1A2CR1.	5-47
A1A12CR13		SEMICONDUCTOR DEVICE, DIODE: Same as A1A2CR1.	5-47
A1A12CR14		SEMICONDUCTOR DEVICE, DIODE: Same as A1A2CR1.	5-47
A1A12CR15		SEMICONDUCTOR DEVICE, DIODE: Same as A1A2CR1.	5-47
A1A12CR16		SEMICONDUCTOR DEVICE, DIODE: Same as A1A2CR1.	5-47
A1A12CR17		SEMICONDUCTOR DEVICE, DIODE: Same as A1A2CR1.	5-47
A1A12CR18		SEMICONDUCTOR DEVICE, DIODE: Same as A1A2CR1.	5-47
A1A12CR19		SEMICONDUCTOR DEVICE, DIODE: Same as A1A2CR1.	5-47
A1A12CR20		SEMICONDUCTOR DEVICE, DIODE: Same as A1A2CR1.	5-47
A1A12CR21		SEMICONDUCTOR DEVICE, DIODE: Same as A1A2CR1.	5-47
A1A12CR22		SEMICONDUCTOR DEVICE, DIODE: Same as A1A2CR1.	5-47
A1A12CR23		SEMICONDUCTOR DEVICE, DIODE: Same as A1A2CR1.	5-47
A1A12CR24		SEMICONDUCTOR DEVICE, DIODE: Same as A1A2CR1.	5-47
A1A12CR25		SEMICONDUCTOR DEVICE, DIODE: Same as A1A2CR1.	5-47
A1A12CR26		SEMICONDUCTOR DEVICE, DIODE: Same as A1A2CR1.	5-47

TABLE 6-1. (Continued)

REF DESIG	NOTES	NAME AND DESCRIPTION	FIG. NO.
A1A12DS1		LAMP, GLOW: 2.217 inches high, 0.875 inch dia., neon tube type, with biquinary display, nine-pin base; mfr BUR, P/N B5025.	5-47
A1A12E1		TERMINAL, STUD, TP1: Same as A1A1E1.	5-47
A1A12E2		TERMINAL, STUD, TP2: Same as A1A1E1.	5-47
A1A12Q1		TRANSISTOR: Type 2N3526; mfr CMC, dwg MP4906063.	5-47
A1A12Q2		TRANSISTOR: Same as A1A12Q1.	5-47
A1A12Q3		TRANSISTOR: Same as A1A12Q1.	5-47
A1A12Q4		TRANSISTOR: Same as A1A12Q1.	5-47
A1A12Q5		TRANSISTOR: Type 3N83; mfr CMC, dwg MP4906103.	5-47
A1A12Q6		TRANSISTOR: Same as A1A12Q5.	5-47
A1A12Q7		TRANSISTOR: Same as A1A12Q5.	5-47
A1A12Q8		TRANSISTOR: Same as A1A12Q5.	5-47
A1A12Q9		TRANSISTOR: Same as A1A12Q5.	5-47
A1A12Q10		TRANSISTOR: Same as A1A1Q4.	5-47
A1A12Q11		TRANSISTOR: Same as A1A1Q4.	5-47
A1A12Q12		TRANSISTOR: Same as A1A1Q4.	5-47
A1A12Q13		TRANSISTOR: Same as A1A1Q4.	5-47
A1A12Q14		TRANSISTOR: Same as A1A1Q4.	5-47
A1A12Q15		TRANSISTOR: Same as A1A1Q4.	5-47
A1A12Q16		TRANSISTOR: Same as A1A1Q4.	5-47
A1A12Q17		TRANSISTOR: Same as A1A1Q4.	5-47
A1A12Q18		TRANSISTOR: Same as A1A1Q4.	5-47
A1A12R1		RESISTOR: MIL type RL42AD303G.	5-47
A1A12R2		RESISTOR: MIL type RL20AD204J.	5-47
A1A12R3		RESISTOR: Same as A1A12R2.	5-47
A1A12R4		RESISTOR: Same as A1A12R1.	5-47
A1A12R5		RESISTOR: MIL type RL20AD622G.	5-47
A1A12R6		RESISTOR: Same as A1A12R5.	5-47
A1A12R7		RESISTOR: MIL type RL20AD183J.	5-47
A1A12R8		RESISTOR: Same as A1A2R6.	5-47
A1A12R9		RESISTOR: Same as A1A2R6.	5-47
A1A12R10		RESISTOR: Same as A1A12R7.	5-47
A1A12R11		RESISTOR: Same as A1A10R44.	5-47
A1A12R12		RESISTOR: Same as A1A10R44.	5-47
A1A12R13		RESISTOR: MIL type RC07GF124J.	5-47
A1A12R14		Not Used.	
A1A12R15		Not Used.	
A1A12R16		RESISTOR: Same as A1A12R13.	5-47
A1A12R17		RESISTOR: Same as A1A2R3.	5-47
A1A12R18		RESISTOR: Same as A1A6R28.	5-47
A1A12R19		RESISTOR: Same as A1A1R6.	5-47
A1A12R20		RESISTOR: Same as A1A10R44.	5-47
A1A12R21		RESISTOR: Same as A1A2R3.	5-47
A1A12R22		RESISTOR: Same as A1A6R28.	5-47
A1A12R23		RESISTOR: Same as A1A1R6.	5-47
A1A12R24		RESISTOR: Same as A1A10R44.	5-47
A1A12R25		RESISTOR: Same as A1A2R3.	5-47
A1A12R26		RESISTOR: Same as A1A6R28.	5-47
A1A12R27		RESISTOR: Same as A1A1R6.	5-47
A1A12R28		RESISTOR: Same as A1A10R44.	5-47
A1A12R29		RESISTOR: Same as A1A2R3.	5-47
A1A12R30		RESISTOR: Same as A1A6R28.	5-47
A1A12R31		RESISTOR: Same as A1A1R6.	5-47
A1A12R32		RESISTOR: Same as A1A10R44.	5-47
A1A12R33		RESISTOR: Same as A1A2R3.	5-47
A1A12R34		RESISTOR: Same as A1A6R28.	5-47

TABLE 6-1. (Continued)

REF DESIG	NOTES	NAME AND DESCRIPTION	FIG. NO.
A1A12R35		RESISTOR: Same as A1A1R6.	5-47
A1A12R36		RESISTOR: Same as A1A10R44.	5-47
A1A12R37		RESISTOR: MIL type RC07GF184J.	5-47
A1A12R38		RESISTOR: Same as A1A2R4.	5-47
A1A12R39		RESISTOR: Same as A1A2R4.	5-47
A1A12R40		RESISTOR: Same as A1A2R4.	5-47
A1A12R41		RESISTOR: Same as A1A2R4.	5-47
A1A12R42		RESISTOR: Same as A1A2R44.	5-47
A1A12R43		RESISTOR: Same as A1A1R6.	5-47
A1A12R44		RESISTOR: Same as A1A2R3.	5-47
A1A12R45		RESISTOR: Same as A1A2R4.	5-47
A1A12R46		RESISTOR: Same as A1A2R6.	5-47
A1A12R47		RESISTOR: Same as A1A2R6.	5-47
A1A12R48		RESISTOR: Same as A1A2R18.	5-47
A1A12R49		RESISTOR: Same as A1A2R4.	5-47
A1A12R50		RESISTOR: Same as A1A1R6.	5-47
A1A12R51		RESISTOR: Same as A1A2R44.	5-47
A1A12R52		RESISTOR: Same as A1A2R3.	5-47
A1A12R53		RESISTOR: Same as A1A2R4.	5-47
A1A12R54		RESISTOR: Same as A1A1R6.	5-47
A1A12R55		RESISTOR: Same as A1A2R4.	5-47
A1A12R56		RESISTOR: Same as A1A2R6.	5-47
A1A12R57		RESISTOR: Same as A1A2R6.	5-47
A1A12R58		RESISTOR: Same as A1A2R18.	5-47
A1A12R59		RESISTOR: Same as A1A2R4.	5-47
A1A12R60		RESISTOR: Same as A1A1R6.	5-47
A1A12R61		RESISTOR: Same as A1A2R4.	5-47
A1A12R62		RESISTOR: Same as A1A2R1.	5-47
A1A12R63		RESISTOR: Same as A1A2R4.	5-47
A1A12R64		RESISTOR: Same as A1A1R6.	5-47
A1A12R65		RESISTOR: Same as A1A2R4.	5-47
A1A12R66		RESISTOR: Same as A1A2R6.	5-47
A1A12R67		RESISTOR: Same as A1A2R6.	5-47
A1A12R68		RESISTOR: Same as A1A2R18.	5-47
A1A12R69		RESISTOR: Same as A1A2R4.	5-47
A1A12R70		RESISTOR: Same as A1A1R6.	5-47
A1A12R71		RESISTOR: Same as A1A2R4.	5-47
A1A12R72		RESISTOR: Same as A1A2R4.	5-47
A1A12R73		RESISTOR: Same as A1A10R5.	5-47
A1A12R74		RESISTOR: Same as A1A2R42.	5-47
A1A12R75		RESISTOR: Same as A1A2R44.	5-47
A1A12R76		RESISTOR: Same as A1A2R4.	5-47
A1A12R77		RESISTOR: Same as A1A2R6.	5-47
A1A12R78		RESISTOR: Same as A1A2R6.	5-47
A1A12R79		RESISTOR: Same as A1A2R18.	5-47
A1A12R80		RESISTOR: Same as A1A2R4.	5-47
A1A12R81		RESISTOR: Same as A1A10R5.	5-47
A1A12R82		RESISTOR: Same as A1A2R1.	5-47
A1A12R83		RESISTOR: Same as A1A2R4.	5-47
A1A12XDS1		SOCKET, ELECTRON TUBE: MIL type TS103P03.	5-47
A1A13		FREQUENCY DIVIDER-DIGITAL DISPLAY INDICATOR: Same as A1A12.	5-47
A1A13C1		CAPACITOR: Same as A1A2C1.	5-47
A1A13C2		CAPACITOR: Same as A1A2C1.	5-47
A1A13C3		CAPACITOR: Same as A1A2C3.	5-47
A1A13C4		CAPACITOR: Same as A1A2C3.	5-47
A1A13C5		CAPACITOR: Same as A1A2C3.	5-47

TABLE 6-1. (Continued)

REF DESIG	NOTES	NAME AND DESCRIPTION	FIG. NO.
A1A13C6		CAPACITOR: Same as A1A2C1.	5-47
A1A13C7		CAPACITOR: Same as A1A2C1.	5-47
A1A13C8		CAPACITOR: Same as A1A2C3.	5-47
A1A13C9		CAPACITOR: Same as A1A2C3.	5-47
A1A13C10		CAPACITOR: Same as A1A2C1.	5-47
A1A13C11		CAPACITOR: Same as A1A2C1.	5-47
A1A13C12		CAPACITOR: Same as A1A2C3.	5-47
A1A13C13		CAPACITOR: Same as A1A2C3.	5-47
A1A13C14		CAPACITOR: Same as A1A2C1.	5-47
A1A13C15		CAPACITOR: Same as A1A2C1.	5-47
A1A13C16		CAPACITOR: Same as A1A2C3.	5-47
A1A13C17		CAPACITOR: Same as A1A1C2.	5-47
A1A13C18		CAPACITOR: Same as A1A1C2.	5-47
A1A13C19		CAPACITOR: Same as A1A5C25.	5-47
A1A13CR1		SEMICONDUCTOR DEVICE, DIODE: Same as A1A2CR1.	5-47
A1A13CR2		SEMICONDUCTOR DEVICE, DIODE: Same as A1A2CR1.	5-47
A1A13CR3		SEMICONDUCTOR DEVICE, DIODE: Same as A1A2CR1.	5-47
A1A13CR4		SEMICONDUCTOR DEVICE, DIODE: Same as A1A2CR1.	5-47
A1A13CR5		SEMICONDUCTOR DEVICE, DIODE: Same as A1A2CR1.	5-47
A1A13CR6		SEMICONDUCTOR DEVICE, DIODE: Same as A1A2CR1.	5-47
A1A13CR7		SEMICONDUCTOR DEVICE, DIODE: Same as A1A2CR1.	5-47
A1A13CR8		SEMICONDUCTOR DEVICE, DIODE: Same as A1A2CR1.	5-47
A1A13CR9		SEMICONDUCTOR DEVICE, DIODE: Same as A1A2CR1.	5-47
A1A13CR10		SEMICONDUCTOR DEVICE, DIODE: Same as A1A2CR1.	5-47
A1A13CR11		SEMICONDUCTOR DEVICE, DIODE: Same as A1A2CR1.	5-47
A1A13CR12		SEMICONDUCTOR DEVICE, DIODE: Same as A1A2CR1.	5-47
A1A13CR13		SEMICONDUCTOR DEVICE, DIODE: Same as A1A2CR1.	5-47
A1A13CR14		SEMICONDUCTOR DEVICE, DIODE: Same as A1A2CR1.	5-47
A1A13CR15		SEMICONDUCTOR DEVICE, DIODE: Same as A1A2CR1.	5-47
A1A13CR16		SEMICONDUCTOR DEVICE, DIODE: Same as A1A2CR1.	5-47
A1A13CR17		SEMICONDUCTOR DEVICE, DIODE: Same as A1A2CR1.	5-47
A1A13CR18		SEMICONDUCTOR DEVICE, DIODE: Same as A1A2CR1.	5-47
A1A13CR19		SEMICONDUCTOR DEVICE, DIODE: Same as A1A2CR1.	5-47
A1A13CR20		SEMICONDUCTOR DEVICE, DIODE: Same as A1A2CR1.	5-47
A1A13CR21		SEMICONDUCTOR DEVICE, DIODE: Same as A1A2CR1.	5-47
A1A13CR22		SEMICONDUCTOR DEVICE, DIODE: Same as A1A2CR1.	5-47
A1A13CR23		SEMICONDUCTOR DEVICE, DIODE: Same as A1A2CR1.	5-47
A1A13CR24		SEMICONDUCTOR DEVICE, DIODE: Same as A1A2CR1.	5-47
A1A13CR25		SEMICONDUCTOR DEVICE, DIODE: Same as A1A2CR1.	5-47
A1A13CR26		SEMICONDUCTOR DEVICE, DIODE: Same as A1A2CR1.	5-47
A1A13DS1		LAMP GLOW: Same as A1A12DS1.	5-47
A1A13E1		TERMINAL, STUD, TP1: Same as A1A1E1.	5-47
A1A13E2		TERMINAL, STUD, TP2: Same as A1A1E1.	5-47
A1A13Q1		TRANSISTOR: Same as A1A12Q1.	5-47
A1A13Q2		TRANSISTOR: Same as A1A12Q1.	5-47
A1A13Q3		TRANSISTOR: Same as A1A12Q1.	5-47
A1A13Q4		TRANSISTOR: Same as A1A12Q1.	5-47
A1A13Q5		TRANSISTOR: Same as A1A12Q5.	5-47
A1A13Q6		TRANSISTOR: Same as A1A12Q5.	5-47
A1A13Q7		TRANSISTOR: Same as A1A12Q5.	5-47
A1A13Q8		TRANSISTOR: Same as A1A12Q5.	5-47
A1A13Q9		TRANSISTOR: Same as A1A12Q5.	5-47
A1A13Q10		TRANSISTOR: Same as A1A1Q4.	5-47
A1A13Q11		TRANSISTOR: Same as A1A1Q4.	5-47
A1A13Q12		TRANSISTOR: Same as A1A1Q4.	5-47
A1A13Q13		TRANSISTOR: Same as A1A1Q4.	5-47
A1A13Q14		TRANSISTOR: Same as A1A1Q4.	5-47

TABLE 6-1. (Continued)

REF DESIG	NOTES	NAME AND DESCRIPTION	FIG. NO.
A1A13Q15		TRANSISTOR: Same as A1A1Q4.	5-47
A1A13Q16		TRANSISTOR: Same as A1A1Q4.	5-47
A1A13Q17		TRANSISTOR: Same as A1A1Q4.	5-47
A1A13Q18		TRANSISTOR: Same as A1A1Q4.	5-47
A1A13R1		RESISTOR: Same as A1A12R1.	5-47
A1A13R2		RESISTOR: Same as A1A12R2.	5-47
A1A13R3		RESISTOR: Same as A1A12R2.	5-47
A1A13R4		RESISTOR: Same as A1A12R1.	5-47
A1A13R5		RESISTOR: Same as A1A12R5.	5-47
A1A13R6		RESISTOR: Same as A1A12R5.	5-47
A1A13R7		RESISTOR: Same as A1A12R7.	5-47
A1A13R8		RESISTOR: Same as A1A2R6.	5-47
A1A13R9		RESISTOR: Same as A1A2R6.	5-47
A1A13R10		RESISTOR: Same as A1A12R7.	5-47
A1A13R11		RESISTOR: Same as A1A10R44.	5-47
A1A13R12		RESISTOR: Same as A1A10R44.	5-47
A1A13R13		RESISTOR: Same as A1A12R13.	5-47
A1A13R14		Not Used.	
A1A13R15		Not Used.	
A1A13R16		RESISTOR: Same as A1A12R13.	5-47
A1A13R17		RESISTOR: Same as A1A2R3.	5-47
A1A13R18		RESISTOR: Same as A1A6R28.	5-47
A1A13R19		RESISTOR: Same as A1A1R6.	5-47
A1A13R20		RESISTOR: Same as A1A10R44.	5-47
A1A13R21		RESISTOR: Same as A1A2R3.	5-47
A1A13R22		RESISTOR: Same as A1A6R28.	5-47
A1A13R23		RESISTOR: Same as A1A1R6.	5-47
A1A13R24		RESISTOR: Same as A1A10R44.	5-47
A1A13R25		RESISTOR: Same as A1A2R3.	5-47
A1A13R26		RESISTOR: Same as A1A6R28.	5-47
A1A13R27		RESISTOR: Same as A1A1R6.	5-47
A1A13R28		RESISTOR: Same as A1A10R44.	5-47
A1A13R29		RESISTOR: Same as A1A2R3.	5-47
A1A13R30		RESISTOR: Same as A1A6R28.	5-47
A1A13R31		RESISTOR: Same as A1A1R6.	5-47
A1A13R32		RESISTOR: Same as A1A10R44.	5-47
A1A13R33		RESISTOR: Same as A1A2R3.	5-47
A1A13R34		RESISTOR: Same as A1A6R28.	5-47
A1A13R35		RESISTOR: Same as A1A1R6.	5-47
A1A13R36		RESISTOR: Same as A1A10R44.	5-47
A1A13R37		RESISTOR: Same as A1A12R37.	5-47
A1A13R38		RESISTOR: Same as A1A2R4.	5-47
A1A13R39		RESISTOR: Same as A1A2R4.	5-47
A1A13R40		RESISTOR: Same as A1A2R4.	5-47
A1A13R41		RESISTOR: Same as A1A2R4.	5-47
A1A13R42		RESISTOR: Same as A1A2R44.	5-47
A1A13R43		RESISTOR: Same as A1A1R6.	5-47
A1A13R44		RESISTOR: Same as A1A2R3.	5-47
A1A13R45		RESISTOR: Same as A1A2R4.	5-47
A1A13R46		RESISTOR: Same as A1A2R6.	5-47
A1A13R47		RESISTOR: Same as A1A2R6.	5-47
A1A13R48		RESISTOR: Same as A1A2R18.	5-47
A1A13R49		RESISTOR: Same as A1A2R4.	5-47
A1A13R50		RESISTOR: Same as A1A1R6.	5-47
A1A13R51		RESISTOR: Same as A1A2R44.	5-47
A1A13R52		RESISTOR: Same as A1A2R3.	5-47
A1A13R53		RESISTOR: Same as A1A2R4.	5-47

TABLE 6-1. (Continued)

REF DESIG	NOTES	NAME AND DESCRIPTION	FIG. NO.
A1A13R54		RESISTOR: Same as A1A1R6.	5-47
A1A13R55		RESISTOR: Same as A1A2R4.	5-47
A1A13R56		RESISTOR: Same as A1A2R6.	5-47
A1A13R57		RESISTOR: Same as A1A2R6.	5-47
A1A13R58		RESISTOR: Same as A1A2R18.	5-47
A1A13R59		RESISTOR: Same as A1A2R4.	5-47
A1A13R60		RESISTOR: Same as A1A1R6.	5-47
A1A13R61		RESISTOR: Same as A1A2R4.	5-47
A1A13R62		RESISTOR: Same as A1A2R1.	5-47
A1A13R63		RESISTOR: Same as A1A2R4.	5-47
A1A13R64		RESISTOR: Same as A1A1R6.	5-47
A1A13R65		RESISTOR: Same as A1A2R4.	5-47
A1A13R66		RESISTOR: Same as A1A2R6.	5-47
A1A13R67		RESISTOR: Same as A1A2R6.	5-47
A1A13R68		RESISTOR: Same as A1A2R18.	5-47
A1A13R69		RESISTOR: Same as A1A2R4.	5-47
A1A13R70		RESISTOR: Same as A1A1R6.	5-47
A1A13R71		RESISTOR: Same as A1A2R4.	5-47
A1A13R72		RESISTOR: Same as A1A2R4.	5-47
A1A13R73		RESISTOR: Same as A1A10R5.	5-47
A1A13R74		RESISTOR: Same as A1A2R42.	5-47
A1A13R75		RESISTOR: Same as A1A2R44.	5-47
A1A13R76		RESISTOR: Same as A1A2R4.	5-47
A1A13R77		RESISTOR: Same as A1A2R6.	5-47
A1A13R78		RESISTOR: Same as A1A2R6.	5-47
A1A13R79		RESISTOR: Same as A1A2R18.	5-47
A1A13R80		RESISTOR: Same as A1A2R4.	5-47
A1A13R81		RESISTOR: Same as A1A10R5.	5-47
A1A13R82		RESISTOR: Same as A1A2R1.	5-47
A1A13R83		RESISTOR: Same as A1A2R4.	5-47
A1A13XDS1		SOCKET, ELECTRON TUBE: Same as A1A12XDS1.	5-47
A1A14		FREQUENCY DIVIDER-DIGITAL DISPLAY INDICATOR: Same as A1A12.	5-47
A1A14C1		CAPACITOR: Same as A1A2C1.	5-47
A1A14C2		CAPACITOR: Same as A1A2C1.	5-47
A1A14C3		CAPACITOR: Same as A1A2C3.	5-47
A1A14C4		CAPACITOR: Same as A1A2C3.	5-47
A1A14C5		CAPACITOR: Same as A1A2C3.	5-47
A1A14C6		CAPACITOR: Same as A1A2C1.	5-47
A1A14C7		CAPACITOR: Same as A1A2C1.	5-47
A1A14C8		CAPACITOR: Same as A1A2C3.	5-47
A1A14C9		CAPACITOR: Same as A1A2C3.	5-47
A1A14C10		CAPACITOR: Same as A1A2C1.	5-47
A1A14C11		CAPACITOR: Same as A1A2C1.	5-47
A1A14C12		CAPACITOR: Same as A1A2C3.	5-47
A1A14C13		CAPACITOR: Same as A1A2C3.	5-47
A1A14C14		CAPACITOR: Same as A1A2C1.	5-47
A1A14C15		CAPACITOR: Same as A1A2C1.	5-47
A1A14C16		CAPACITOR: Same as A1A2C3.	5-47
A1A14C17		CAPACITOR: Same as A1A1C2.	5-47
A1A14C18		CAPACITOR: Same as A1A1C2.	5-47
A1A14C19		CAPACITOR: Same as A1A5C25.	5-47
A1A14CR1		SEMICONDUCTOR DEVICE, DIODE: Same as A1A2CR1.	5-47
A1A14CR2		SEMICONDUCTOR DEVICE, DIODE: Same as A1A2CR1.	5-47
A1A14CR3		SEMICONDUCTOR DEVICE, DIODE: Same as A1A2CR1.	5-47
A1A14CR4		SEMICONDUCTOR DEVICE, DIODE: Same as A1A2CR1.	5-47
A1A14CR5		SEMICONDUCTOR DEVICE, DIODE: Same as A1A2CR1.	5-47

TABLE 6-1. (Continued)

REF DESIG	NOTES	NAME AND DESCRIPTION	FIG. NO.
A1A14CR6		SEMICONDUCTOR DEVICE, DIODE: Same as A1A2CR1.	5-47
A1A14CR7		SEMICONDUCTOR DEVICE, DIODE: Same as A1A2CR1.	5-47
A1A14CR8		SEMICONDUCTOR DEVICE, DIODE: Same as A1A2CR1.	5-47
A1A14CR9		SEMICONDUCTOR DEVICE, DIODE: Same as A1A2CR1.	5-47
A1A14CR10		SEMICONDUCTOR DEVICE, DIODE: Same as A1A2CR1.	5-47
A1A14CR11		SEMICONDUCTOR DEVICE, DIODE: Same as A1A2CR1.	5-47
A1A14CR12		SEMICONDUCTOR DEVICE, DIODE: Same as A1A2CR1.	5-47
A1A14CR13		SEMICONDUCTOR DEVICE, DIODE: Same as A1A2CR1.	5-47
A1A14CR14		SEMICONDUCTOR DEVICE, DIODE: Same as A1A2CR1.	5-47
A1A14CR15		SEMICONDUCTOR DEVICE, DIODE: Same as A1A2CR1.	5-47
A1A14CR16		SEMICONDUCTOR DEVICE, DIODE: Same as A1A2CR1.	5-47
A1A14CR17		SEMICONDUCTOR DEVICE, DIODE: Same as A1A2CR1.	5-47
A1A14CR18		SEMICONDUCTOR DEVICE, DIODE: Same as A1A2CR1.	5-47
A1A14CR19		SEMICONDUCTOR DEVICE, DIODE: Same as A1A2CR1.	5-47
A1A14CR20		SEMICONDUCTOR DEVICE, DIODE: Same as A1A2CR1.	5-47
A1A14CR21		SEMICONDUCTOR DEVICE, DIODE: Same as A1A2CR1.	5-47
A1A14CR22		SEMICONDUCTOR DEVICE, DIODE: Same as A1A2CR1.	5-47
A1A14CR23		SEMICONDUCTOR DEVICE, DIODE: Same as A1A2CR1.	5-47
A1A14CR24		SEMICONDUCTOR DEVICE, DIODE: Same as A1A2CR1.	5-47
A1A14CR25		SEMICONDUCTOR DEVICE, DIODE: Same as A1A2CR1.	5-47
A1A14CR26		SEMICONDUCTOR DEVICE, DIODE: Same as A1A2CR1.	5-47
A1A14DS1		LAMP, GLOW: Same as A1A12DS1.	5-47
A1A14E1		TERMINAL, STUD, TP1: Same as A1A1E1.	5-47
A1A14E1		TERMINAL, STUD, TP2: Same as A1A1E1.	5-47
A1A14Q1		TRANSISTOR: Same as A1A12Q1.	5-47
A1A14Q2		TRANSISTOR: Same as A1A12Q1.	5-47
A1A14Q3		TRANSISTOR: Same as A1A12Q1.	5-47
A1A14Q4		TRANSISTOR: Same as A1A12Q1.	5-47
A1A14Q5		TRANSISTOR: Same as A1A12Q5.	5-47
A1A14Q6		TRANSISTOR: Same as A1A12Q5.	5-47
A1A14Q7		TRANSISTOR: Same as A1A12Q5.	5-47
A1A14Q8		TRANSISTOR: Same as A1A12Q5.	5-47
A1A14Q9		TRANSISTOR: Same as A1A12Q5.	5-47
A1A14Q10		TRANSISTOR: Same as A1A1Q4.	5-47
A1A14Q11		TRANSISTOR: Same as A1A1Q4.	5-47
A1A14Q12		TRANSISTOR: Same as A1A1Q4.	5-47
A1A14Q13		TRANSISTOR: Same as A1A1Q4.	5-47
A1A14Q14		TRANSISTOR: Same as A1A1Q4.	5-47
A1A14Q15		TRANSISTOR: Same as A1A1Q4.	5-47
A1A14Q16		TRANSISTOR: Same as A1A1Q4.	5-47
A1A14Q17		TRANSISTOR: Same as A1A1Q4.	5-47
A1A14Q18		TRANSISTOR: Same as A1A1Q4.	5-47
A1A14R1		RESISTOR: Same as A1A12R1.	5-47
A1A14R2		RESISTOR: MIL type RL20AD204J.	5-47
A1A14R3		RESISTOR: Same as A1A12R2.	5-47
A1A14R4		RESISTOR: Same as A1A12R1.	5-47
A1A14R5		RESISTOR: Same as A1A12R5.	5-47
A1A14R6		RESISTOR: Same as A1A12R5.	5-47
A1A14R7		RESISTOR: Same as A1A12R7.	5-47
A1A14R8		RESISTOR: Same as A1A2R6.	5-47
A1A14R9		RESISTOR: Same as A1A2R6.	5-47
A1A14R10		RESISTOR: Same as A1A12R7.	5-47
A1A14R11		RESISTOR: Same as A1A10R44.	5-47
A1A14R12		RESISTOR: Same as A1A10R44.	5-47
A1A14R13		RESISTOR: Same as A1A12R13.	5-47
A1A14R14		Not Used.	
A1A14R15		Not Used.	

TABLE 6-1. (Continued)

REF DESIG	NOTES	NAME AND DESCRIPTION	FIG. NO.
A1A14R16		RESISTOR: Same as A1A12R13.	5-47
A1A14R17		RESISTOR: Same as A1A2R3.	5-47
A1A14R18		RESISTOR: Same as A1A6R28.	5-47
A1A14R19		RESISTOR: Same as A1A1R6.	5-47
A1A14R20		RESISTOR: Same as A1A10R44.	5-47
A1A14R21		RESISTOR: Same as A1A2R3.	5-47
A1A14R22		RESISTOR: Same as A1A6R28.	5-47
A1A14R23		RESISTOR: Same as A1A1R6.	5-47
A1A14R24		RESISTOR: Same as A1A10R44.	5-47
A1A14R25		RESISTOR: Same as A1A2R3.	5-47
A1A14R26		RESISTOR: Same as A1A6R28.	5-47
A1A14R27		RESISTOR: Same as A1A1R6.	5-47
A1A14R28		RESISTOR: Same as A1A10R44.	5-47
A1A14R29		RESISTOR: Same as A1A2R3.	5-47
A1A14R30		RESISTOR: Same as A1A6R28.	5-47
A1A14R31		RESISTOR: Same as A1A1R6.	5-47
A1A14R32		RESISTOR: Same as A1A10R44.	5-47
A1A14R33		RESISTOR: Same as A1A2R3.	5-47
A1A14R34		RESISTOR: Same as A1A6R28.	5-47
A1A14R35		RESISTOR: Same as A1A1R6.	5-47
A1A14R36		RESISTOR: Same as A1A10R44.	5-47
A1A14R37		RESISTOR: Same as A1A12R37.	5-47
A1A14R38		RESISTOR: Same as A1A2R4.	5-47
A1A14R39		RESISTOR: Same as A1A2R4.	5-47
A1A14R40		RESISTOR: Same as A1A2R4.	5-47
A1A14R41		RESISTOR: Same as A1A2R4.	5-47
A1A14R42		RESISTOR: Same as A1A2R44.	5-47
A1A14R43		RESISTOR: Same as A1A1R6.	5-47
A1A14R44		RESISTOR: Same as A1A2R3.	5-47
A1A14R45		RESISTOR: Same as A1A2R4.	5-47
A1A14R46		RESISTOR: Same as A1A2R6.	5-47
A1A14R47		RESISTOR: Same as A1A2R6.	5-47
A1A14R48		RESISTOR: Same as A1A2R18.	5-47
A1A14R49		RESISTOR: Same as A1A2R4.	5-47
A1A14R50		RESISTOR: Same as A1A1R6.	5-47
A1A14R51		RESISTOR: Same as A1A2R44.	5-47
A1A14R52		RESISTOR: Same as A1A2R3.	5-47
A1A14R53		RESISTOR: Same as A1A2R4.	5-47
A1A14R54		RESISTOR: Same as A1A1R6.	5-47
A1A14R55		RESISTOR: Same as A1A2R4.	5-47
A1A14R56		RESISTOR: Same as A1A2R6.	5-47
A1A14R57		RESISTOR: Same as A1A2R6.	5-47
A1A14R58		RESISTOR: Same as A1A2R18.	5-47
A1A14R59		RESISTOR: Same as A1A2R4.	5-47
A1A14R60		RESISTOR: Same as A1A1R6.	5-47
A1A14R61		RESISTOR: Same as A1A2R4.	5-47
A1A14R62		RESISTOR: Same as A1A2R1.	5-47
A1A14R63		RESISTOR: Same as A1A2R4.	5-47
A1A14R64		RESISTOR: Same as A1A1R6.	5-47
A1A14R65		RESISTOR: Same as A1A2R4.	5-47
A1A14R66		RESISTOR: Same as A1A2R6.	5-47
A1A14R67		RESISTOR: Same as A1A2R6.	5-47
A1A14R68		RESISTOR: Same as A1A2R18.	5-47
A1A14R69		RESISTOR: Same as A1A2R4.	5-47
A1A14R70		RESISTOR: Same as A1A1R6.	5-47
A1A14R71		RESISTOR: Same as A1A2R4.	5-47
A1A14R72		RESISTOR: Same as A1A2R4.	5-47

TABLE 6-1. (Continued)

REF DESIG	NOTES	NAME AND DESCRIPTION	FIG. NO.
A1A14R73		RESISTOR: Same as A1A10R5.	5-47
A1A14R74		RESISTOR: Same as A1A2R42.	5-47
A1A14R75		RESISTOR: Same as A1A2R44.	5-47
A1A14R76		RESISTOR: Same as A1A2R4.	5-47
A1A14R77		RESISTOR: Same as A1A2R6.	5-47
A1A14R78		RESISTOR: Same as A1A2R6.	5-47
A1A14R79		RESISTOR: Same as A1A2R18.	5-47
A1A14R80		RESISTOR: Same ad A1A2R4.	5-47
A1A14R81		RESISTOR: Same as A1A10R5.	5-47
A1A14R82		RESISTOR: Same as A1A2R1.	5-47
A1A14R83		RESISTOR: Same as A1A2R4.	5-47
A1A14XDS1		SOCKET, ELECTRON TUBE: Same as A1A12XDS1.	5-47
A1A15		FREQUENCY DIVIDER-DIGITAL DISPLAY INDICATOR: Same as A1A12.	5-47
A1A15C1		CAPACITOR: Same as A1A2C1.	5-47
A1A15C2		CAPACITOR: Same as A1A2C1.	5-47
A1A15C3		CAPACITOR: Same as A1A2C3.	5-47
A1A15C4		CAPACITOR: Same as A1A2C3.	5-47
A1A15C5		CAPACITOR: Same as A1A2C3.	5-47
A1A15C6		CAPACITOR: Same as A1A2C1.	5-47
A1A15C7		CAPACITOR: Same as A1A2C1.	5-47
A1A15C8		CAPACITOR: Same as A1A2C3.	5-47
A1A15C9		CAPACITOR: Same as A1A2C3.	5-47
A1A15C10		CAPACITOR: Same as A1A2C1.	5-47
A1A15C11		CAPACITOR: Same as A1A2C1.	5-47
A1A15C12		CAPACITOR: Same as A1A2C3.	5-47
A1A15C13		CAPACITOR: Same as A1A2C3.	5-47
A1A15C14		CAPACITOR: Same as A1A2C1.	5-47
A1A15C15		CAPACITOR: Same as A1A2C1.	5-47
A1A15C16		CAPACITOR: Same as A1A2C3.	5-47
A1A15C17		CAPACITOR: Same as A1A1C2.	5-47
A1A15C18		CAPACITOR: Same as A1A1C2.	5-47
A1A15C19		CAPACITOR: Same as A1A2C25.	5-47
A1A15CR1		SEMICONDUCTOR DEVICE, DIODE: Same as A1A2CR1.	5-47
A1A15CR2		SEMICONDUCTOR DEVICE, DIODE: Same as A1A2CR1.	5-47
A1A15CR3		SEMICONDUCTOR DEVICE, DIODE: Same as A1A2CR1.	5-47
A1A15CR4		SEMICONDUCTOR DEVICE, DIODE: Same as A1A2CR1.	5-47
A1A15CR5		SEMICONDUCTOR DEVICE, DIODE: Same as A1A2CR1.	5-47
A1A15CR6		SEMICONDUCTOR DEVICE, DIODE: Same as A1A2CR1.	5-47
A1A15CR7		SEMICONDUCTOR DEVICE, DIODE: Same as A1A2CR1.	5-47
A1A15CR8		SEMICONDUCTOR DEVICE, DIODE: Same as A1A2CR1.	5-47
A1A15CR9		SEMICONDUCTOR DEVICE, DIODE: Same as A1A2CR1.	5-47
A1A15CR10		SEMICONDUCTOR DEVICE, DIODE: Same as A1A2CR1.	5-47
A1A15CR11		SEMICONDUCTOR DEVICE, DIODE: Same as A1A2CR1.	5-47
A1A15CR12		SEMICONDUCTOR DEVICE, DIODE: Same as A1A2CR1.	5-47
A1A15CR13		SEMICONDUCTOR DEVICE, DIODE: Same as A1A2CR1.	5-47
A1A15CR14		SEMICONDUCTOR DEVICE, DIODE: Same as A1A2CR1.	5-47
A1A15CR15		SEMICONDUCTOR DEVICE, DIODE: Same as A1A2CR1.	5-47
A1A15CR16		SEMICONDUCTOR DEVICE, DIODE: Same as A1A2CR1.	5-47
A1A15CR17		SEMICONDUCTOR DEVICE, DIODE: Same as A1A2CR1.	5-47
A1A15CR18		SEMICONDUCTOR DEVICE, DIODE: Same as A1A2CR1.	5-47
A1A15CR19		SEMICONDUCTOR DEVICE, DIODE: Same as A1A2CR1.	5-47
A1A15CR20		SEMICONDUCTOR DEVICE, DIODE: Same as A1A2CR1.	5-47
A1A15CR21		SEMICONDUCTOR DEVICE, DIODE: Same as A1A2CR1.	5-47
A1A15CR22		SEMICONDUCTOR DEVICE, DIODE: Same as A1A2CR1.	5-47
A1A15CR23		SEMICONDUCTOR DEVICE, DIODE: Same as A1A2CR1.	5-47
A1A15CR24		SEMICONDUCTOR DEVICE, DIODE: Same as A1A2CR1.	5-47

TABLE 6-1. (Continued)

REF DESIG	NOTES	NAME AND DESCRIPTION	FIG. NO.
A1A15CR25		SEMICONDUCTOR DEVICE, DIODE: Same as A1A2CR1.	5-47
A1A15CR26		SEMICONDUCTOR DEVICE, DIODE: Same as A1A2CR1.	5-47
A1A15DS1		LAMP, GLOW: Same as A1A12DS1.	5-47
A1A15E1		TERMINAL, STUD, TP1: Same as A1A1E1.	5-47
A1A15E2		TERMINAL, STUD, TP2: Same as A1A1E1.	5-47
A1A15Q1		TRANSISTOR: Same as A1A12Q1.	5-47
A1A15Q2		TRANSISTOR: Same as A1A12Q1.	5-47
A1A15Q3		TRANSISTOR: Same as A1A12Q1.	5-47
A1A15Q4		TRANSISTOR: Same as A1A12Q1.	5-47
A1A15Q5		TRANSISTOR: Same as A1A12Q5.	5-47
A1A15Q6		TRANSISTOR: Same as A1A12Q5.	5-47
A1A15Q7		TRANSISTOR: Same as A1A12Q5.	5-47
A1A15Q8		TRANSISTOR: Same as A1A12Q5.	5-47
A1A15Q9		TRANSISTOR: Same as A1A12Q5.	5-47
A1A15Q10		TRANSISTOR: Same as A1A1Q4.	5-47
A1A15Q11		TRANSISTOR: Same as A1A1Q4.	5-47
A1A15Q12		TRANSISTOR: Same as A1A1Q4.	5-47
A1A15Q13		TRANSISTOR: Same as A1A1Q4.	5-47
A1A15Q14		TRANSISTOR: Same as A1A1Q4.	5-47
A1A15Q15		TRANSISTOR: Same as A1A1Q4.	5-47
A1A15Q16		TRANSISTOR: Same as A1A1Q4.	5-47
A1A15Q17		TRANSISTOR: Same as A1A1Q4.	5-47
A1A15Q18		TRANSISTOR: Same as A1A1Q4.	5-47
A1A15R1		RESISTOR: Same as A1A12R1.	5-47
A1A15R2		RESISTOR: Same as A1A12R2.	5-47
A1A15R3		RESISTOR: Same as A1A12R2.	5-47
A1A15R4		RESISTOR: Same as A1A12R1.	5-47
A1A15R5		RESISTOR: Same as A1A12R5.	5-47
A1A15R6		RESISTOR: Same as A1A12R5.	5-47
A1A15R7		RESISTOR: Same as A1A12R7.	5-47
A1A15R8		RESISTOR: Same as A1A2R6.	5-47
A1A15R9		RESISTOR: Same as A1A2R6.	5-47
A1A15R10		RESISTOR: Same as A1A12R7.	5-47
A1A15R11		RESISTOR: Same as A1A10R44.	5-47
A1A15R12		RESISTOR: Same as A1A10R44.	5-47
A1A15R13		RESISTOR: Same as A1A12R13.	5-47
A1A15R14		Not Used.	
A1A15R15		Not Used.	
A1A15R16		RESISTOR: Same as A1A12R13.	5-47
A1A15R17		RESISTOR: Same as A1A2R3.	5-47
A1A15R18		RESISTOR: Same as A1A6R28.	5-47
A1A15R19		RESISTOR: Same as A1A1R6.	5-47
A1A15R20		RESISTOR: Same as A1A10R44.	5-47
A1A15R21		RESISTOR: Same as A1A2R3.	5-47
A1A15R22		RESISTOR: Same as A1A6R28.	5-47
A1A15R23		RESISTOR: Same as A1A1R6.	5-47
A1A15R24		RESISTOR: Same as A1A10R44.	5-47
A1A15R25		RESISTOR: Same as A1A2R3.	5-47
A1A15R26		RESISTOR: Same as A1A6R28.	5-47
A1A15R27		RESISTOR: Same as A1A1R6.	5-47
A1A15R28		RESISTOR: Same as A1A10R44.	5-47
A1A15R29		RESISTOR: Same as A1A2R3.	5-47
A1A15R30		RESISTOR: Same as A1A6R28.	5-47
A1A15R31		RESISTOR: Same as A1A1R6.	5-47
A1A15R32		RESISTOR: Same as A1A10R44.	5-47
A1A15R33		RESISTOR: Same as A1A2R3.	5-47
A1A15R34		RESISTOR: Same as A1A6R28.	5-47

TABLE 6-1. (Continued)

REF DESIG	NOTES	NAME AND DESCRIPTION	FIG. NO.
A1A15R35		RESISTOR: Same as A1A1R6.	5-47
A1A15R36		RESISTOR: Same as A1A10R44.	5-47
A1A15R37		RESISTOR: Same as A1A12R37.	5-47
A1A15R38		RESISTOR: Same as A1A2R4.	5-47
A1A15R39		RESISTOR: Same as A1A2R4.	5-47
A1A15R40		RESISTOR: Same as A1A2R4.	5-47
A1A15R41		RESISTOR: Same as A1A2R4.	5-47
A1A15R42		RESISTOR: Same as A1A2R44.	5-47
A1A15R43		RESISTOR: Same as A1A1R6.	5-47
A1A15R44		RESISTOR: Same as A1A2R3.	5-47
A1A15R45		RESISTOR: Same as A1A2R4.	5-47
A1A15R46		RESISTOR: Same as A1A2R6.	5-47
A1A15R47		RESISTOR: Same as A1A2R6.	5-47
A1A15R48		RESISTOR: Same as A1A2R18.	5-47
A1A15R49		RESISTOR: Same as A1A2R4.	5-47
A1A15R50		RESISTOR: Same as A1A1R6.	5-47
A1A15R51		RESISTOR: Same as A1A2R44.	5-47
A1A15R52		RESISTOR: Same as A1A2R3.	5-47
A1A15R53		RESISTOR: Same as A1A2R4.	5-47
A1A15R54		RESISTOR: Same as A1A1R6.	5-47
A1A15R55		RESISTOR: Same as A1A2R4.	5-47
A1A15R56		RESISTOR: Same as A1A2R6.	5-47
A1A15R57		RESISTOR: Same as A1A2R6.	5-47
A1A15R58		RESISTOR: Same as A1A2R18.	5-47
A1A15R59		RESISTOR: Same as A1A1R4.	5-47
A1A15R60		RESISTOR: Same as A1A2R6.	5-47
A1A15R61		RESISTOR: Same as A1A2R4.	5-47
A1A15R62		RESISTOR: Same as A1A2R1.	5-47
A1A15R63		RESISTOR: Same as A1A2R4.	5-47
A1A15R64		RESISTOR: Same as A1A2R6.	5-47
A1A15R65		RESISTOR: Same as A1A2R4.	5-47
A1A15R66		RESISTOR: Same as A1A2R6.	5-47
A1A15R67		RESISTOR: Same as A1A2R6.	5-47
A1A15R68		RESISTOR: Same as A1A2R18.	5-47
A1A15R69		RESISTOR: Same as A1A2R4.	5-47
A1A15R70		RESISTOR: Same as A1A1R6.	5-47
A1A15R71		RESISTOR: Same as A1A2R4.	5-47
A1A15R72		RESISTOR: Same as A1A2R4.	5-47
A1A15R73		RESISTOR: Same as A1A10R5.	5-47
A1A15R74		RESISTOR: Same as A1A2R42.	5-47
A1A15R75		RESISTOR: Same as A1A2R44.	5-47
A1A15R76		RESISTOR: Same as A1A2R4.	5-47
A1A15R77		RESISTOR: Same as A1A2R6.	5-47
A1A15R78		RESISTOR: Same as A1A2R6.	5-47
A1A15R79		RESISTOR: Same as A1A2R18.	5-47
A1A15R80		RESISTOR: Same as A1A2R4.	5-47
A1A15R81		RESISTOR: Same as A1A10R5.	5-47
A1A15R82		RESISTOR: Same as A1A2R1.	5-47
A1A15R83		RESISTOR: Same as A1A2R4.	5-47
A1A15XDS1		SOCKET, ELECTRON TUBE: Same as A1A12XDS1.	5-47
A1A16		FREQUENCY DIVIDER-DIGITAL DISPLAY INDICATOR: Same as A1A12.	5-47
A1A16C1		CAPACITOR: Same as A1A2C1.	5-47
A1A16C2		CAPACITOR: Same as A1A2C1.	5-47
A1A16C3		CAPACITOR: Same as A1A2C3.	5-47
A1A16C4		CAPACITOR: Same as A1A2C3.	5-47
A1A16C5		CAPACITOR: Same as A1A2C3.	5-47
A1A16C6		CAPACITOR: Same as A1A2C1.	5-47

TABLE 6-1. (Continued)

REF DESIG	NOTES	NAME AND DESCRIPTION	FIG. NO.
A1A16C7		CAPACITOR: Same as A1A2C1.	5-47
A1A16C8		CAPACITOR: Same as A1A2C3.	5-47
A1A16C9		CAPACITOR: Same as A1A2C3.	5-47
A1A16C10		CAPACITOR: Same as A1A2C1.	5-47
A1A16C11		CAPACITOR: Same as A1A2C1.	5-47
A1A16C12		CAPACITOR: Same as A1A2C3.	5-47
A1A16C13		CAPACITOR: Same as A1A2C3.	5-47
A1A16C14		CAPACITOR: Same as A1A2C1.	5-47
A1A16C15		CAPACITOR: Same as A1A2C1.	5-47
A1A16C16		CAPACITOR: Same as A1A2C3.	5-47
A1A16C17		CAPACITOR: Same as A1A1C2.	5-47
A1A16C18		CAPACITOR: Same as A1A1C2.	5-47
A1A16C19		CAPACITOR: Same as A1A5C25.	5-47
A1A16CR1		SEMICONDUCTOR DEVICE, DIODE: Same as A1A2CR1.	5-47
A1A16CR2		SEMICONDUCTOR DEVICE, DIODE: Same as A1A2CR1.	5-47
A1A16CR3		SEMICONDUCTOR DEVICE, DIODE: Same as A1A2CR1.	5-47
A1A16CR4		SEMICONDUCTOR DEVICE, DIODE: Same as A1A2CR1.	5-47
A1A16CR5		SEMICONDUCTOR DEVICE, DIODE: Same as A1A2CR1.	5-47
A1A16CR6		SEMICONDUCTOR DEVICE, DIODE: Same as A1A2CR1.	5-47
A1A16CR7		SEMICONDUCTOR DEVICE, DIODE: Same as A1A2CR1.	5-47
A1A16CR8		SEMICONDUCTOR DEVICE, DIODE: Same as A1A2CR1.	5-47
A1A16CR9		SEMICONDUCTOR DEVICE, DIODE: Same as A1A2CR1.	5-47
A1A16CR10		SEMICONDUCTOR DEVICE, DIODE: Same as A1A2CR1.	5-47
A1A16CR11		SEMICONDUCTOR DEVICE, DIODE: Same as A1A2CR1.	5-47
A1A16CR12		SEMICONDUCTOR DEVICE, DIODE: Same as A1A2CR1.	5-47
A1A16CR13		SEMICONDUCTOR DEVICE, DIODE: Same as A1A2CR1.	5-47
A1A16CR14		SEMICONDUCTOR DEVICE, DIODE: Same as A1A2CR1.	5-47
A1A16CR15		SEMICONDUCTOR DEVICE, DIODE: Same as A1A2CR1.	5-47
A1A16CR16		SEMICONDUCTOR DEVICE, DIODE: Same as A1A2CR1.	5-47
A1A16CR17		SEMICONDUCTOR DEVICE, DIODE: Same as A1A2CR1.	5-47
A1A16CR18		SEMICONDUCTOR DEVICE, DIODE: Same as A1A2CR1.	5-47
A1A16CR19		SEMICONDUCTOR DEVICE, DIODE: Same as A1A2CR1.	5-47
A1A16CR20		SEMICONDUCTOR DEVICE, DIODE: Same as A1A2CR1.	5-47
A1A16CR21		SEMICONDUCTOR DEVICE, DIODE: Same as A1A2CR1.	5-47
A1A16CR22		SEMICONDUCTOR DEVICE, DIODE: Same as A1A2CR1.	5-47
A1A16CR23		SEMICONDUCTOR DEVICE, DIODE: Same as A1A2CR1.	5-47
A1A16CR24		SEMICONDUCTOR DEVICE, DIODE: Same as A1A2CR1.	5-47
A1A16CR25		SEMICONDUCTOR DEVICE, DIODE: Same as A1A2CR1.	5-47
A1A16CR26		SEMICONDUCTOR DEVICE, DIODE: Same as A1A2CR1.	5-47
A1A16DS1		LAMP, GLOW: Same as A1A12DS1.	5-47
A1A16E1		TERMINAL, STUD, TP1: Same as A1A1E1.	5-47
A1A16E2		TERMINAL, STUD, TP2: Same as A1A1E1.	5-47
A1A16Q1		TRANSISTOR: Same as A1A12Q1.	5-47
A1A16Q2		TRANSISTOR: Same as A1A12Q1.	5-47
A1A16Q3		TRANSISTOR: Same as A1A12Q1.	5-47
A1A16Q4		TRANSISTOR: Same as A1A12Q1.	5-47
A1A16Q5		TRANSISTOR: Same as A1A12Q5.	5-47
A1A16Q6		TRANSISTOR: Same as A1A12Q5.	5-47
A1A16Q7		TRANSISTOR: Same as A1A12Q5.	5-47
A1A16Q8		TRANSISTOR: Same as A1A12Q5.	5-47
A1A16Q9		TRANSISTOR: Same as A1A12Q5.	5-47
A1A16Q10		TRANSISTOR: Same as A1A1Q4.	5-47
A1A16Q11		TRANSISTOR: Same as A1A1Q4.	5-47
A1A16Q12		TRANSISTOR: Same as A1A1Q4.	5-47
A1A16Q13		TRANSISTOR: Same as A1A1Q4.	5-47
A1A16Q14		TRANSISTOR: Same as A1A1Q4.	5-47
A1A16Q15		TRANSISTOR: Same as A1A1Q4.	5-47

TABLE 6-1. (Continued)

REF DESIG	NOTES	NAME AND DESCRIPTION	FIG. NO.
A1A16Q16		TRANSISTOR: Same as A1A1Q4.	5-47
A1A16Q17		TRANSISTOR: Same as A1A1Q4.	5-47
A1A16Q18		TRANSISTOR: Same as A1A1Q4.	5-47
A1A16R1		RESISTOR: Same as A1A12R1.	5-47
A1A16R2		RESISTOR: Same as A1A12R2.	5-47
A1A16R3		RESISTOR: Same as A1A12R2.	5-47
A1A16R4		RESISTOR: Same as A1A12R1.	5-47
A1A16R5		RESISTOR: Same as A1A12R5.	5-47
A1A16R6		RESISTOR: Same as A1A12R5.	5-47
A1A16R7		RESISTOR: Same as A1A12R5.	5-47
A1A16R8		RESISTOR: Same as A1A2R6.	5-47
A1A16R9		RESISTOR: Same as A1A2R6.	5-47
A1A16R10		RESISTOR: Same as A1A12R7.	5-47
A1A16R11		RESISTOR: Same as A1A10R44.	5-47
A1A16R12		RESISTOR: Same as A1A10R44.	5-47
A1A16R13		RESISTOR: Same as A1A12R13.	5-47
A1A16R14		Not Used.	
A1A16R15		Not Used.	
A1A16R16		RESISTOR: Same as A1A12R13.	5-47
A1A16R17		RESISTOR: Same as A1A2R3.	5-47
A1A16R18		RESISTOR: Same as A1A6R28.	5-47
A1A16R19		RESISTOR: Same as A1A1R6.	5-47
A1A16R20		RESISTOR: Same as A1A10R44	5-47
A1A16R21		RESISTOR: Same as A1A2R3.	5-47
A1A16R22		RESISTOR: Same as A1A6R28.	5-47
A1A16R23		RESISTOR: Same as A1A1R6.	5-47
A1A16R24		RESISTOR: Same as A1A10R44.	5-47
A1A16R25		RESISTOR: Same as A1A2R3.	5-47
A1A16R26		RESISTOR: Same as A1A6R28.	5-47
A1A16R27		RESISTOR: Same as A1A1R6.	5-47
A1A16R28		RESISTOR: Same as A1A10R44.	5-47
A1A16R29		RESISTOR: Same as A1A2R3.	5-47
A1A16R30		RESISTOR: Same as A1A6R28.	5-47
A1A16R31		RESISTOR: Same as A1A1R6.	5-47
A1A16R32		RESISTOR: Same as A1A10R44.	5-47
A1A16R33		RESISTOR: Same as A1A2R3.	5-47
A1A16R34		RESISTOR: Same as A1A6R28.	5-47
A1A16R35		RESISTOR: Same as A1A1R6.	5-47
A1A16R36		RESISTOR: Same as A1A10R44.	5-47
A1A16R37		RESISTOR: Same as A1A12R37.	5-47
A1A16R38		RESISTOR: Same as A1A2R4.	5-47
A1A16R39		RESISTOR: Same as A1A2R4.	5-47
A1A16R40		RESISTOR: Same as A1A2R4.	5-47
A1A16R41		RESISTOR: Same as A1A2R4.	5-47
A1A16R42		RESISTOR: Same as A1A2R44.	5-47
A1A16R43		RESISTOR: Same as A1A1R6.	5-47
A1A16R44		RESISTOR: Same as A1A2R3.	5-47
A1A16R45		RESISTOR: Same as A1A2R4.	5-47
A1A16R46		RESISTOR: Same as A1A2R6.	5-47
A1A16R47		RESISTOR: Same as A1A2R6.	5-47
A1A16R48		RESISTOR: Same as A1A2R18.	5-47
A1A16R49		RESISTOR: Same as A1A2R4.	5-47
A1A16R50		RESISTOR: Same as A1A1R6.	5-47
A1A16R51		RESISTOR: Same as A1A2R44.	5-47
A1A16R52		RESISTOR: Same as A1A2R3.	5-47
A1A16R53		RESISTOR: Same as A1A2R4.	5-47

TABLE 6-1. (Continued)

REF DESIG	NOTES	NAME AND DESCRIPTION	FIG. NO.
A1A16R54		RESISTOR: Same as A1A1R6.	5-47
A1A16R55		RESISTOR: Same as A1A2R4.	5-47
A1A16R56		RESISTOR: Same as A1A2R6.	5-47
A1A16R57		RESISTOR: Same as A1A2R6.	5-47
A1A16R58		RESISTOR: Same as A1A2R18.	5-47
A1A16R59		RESISTOR: Same as A1A2R4.	5-47
A1A16R60		RESISTOR: Same as A1A1R6.	5-47
A1A16R61		RESISTOR: Same as A1A2R4.	5-47
A1A16R62		RESISTOR: Same as A1A2R1.	5-47
A1A16R63		RESISTOR: Same as A1A2R4.	5-47
A1A16R64		RESISTOR: Same as A1A1R6.	5-47
A1A16R65		RESISTOR: Same as A1A2R4.	5-47
A1A16R66		RESISTOR: Same as A1A2R6.	5-47
A1A16R67		RESISTOR: Same as A1A2R6.	5-47
A1A16R68		RESISTOR: Same as A1A2R18.	5-47
A1A16R69		RESISTOR: Same as A1A2R4.	5-47
A1A16R70		RESISTOR: Same as A1A1R6.	5-47
A1A16R71		RESISTOR: Same as A1A2R4.	5-47
A1A16R72		RESISTOR: Same as A1A2R4.	5-47
A1A16R73		RESISTOR: Same as A1A10R5.	5-47
A1A16R74		RESISTOR: Same as A1A2R42.	5-47
A1A16R75		RESISTOR: Same as A1A2R44.	5-47
A1A16R76		RESISTOR: Same as A1A2R4.	5-47
A1A16R77		RESISTOR: Same as A1A2R6.	5-47
A1A16R78		RESISTOR: Same as A1A2R6.	5-47
A1A16R79		RESISTOR: Same as A1A2R18.	5-47
A1A16R80		RESISTOR: Same as A1A2R4.	5-47
A1A16R81		RESISTOR: Same as A1A10R5.	5-47
A1A16R82		RESISTOR: Same as A1A2R1.	5-47
A1A16R83		RESISTOR: Same as A1A2R4.	5-47
A1A16XDS1		SOCKET, ELECTRON TUBE: Same as A1A12XDS1.	5-47
A1A17		FREQUENCY DIVIDER-DIGITAL DISPLAY INDICATOR: Printed circuit board w/all components assembled for operation; mfr CMC, dwg MP96-502L4.	5-48
A1A17C1		CAPACITOR: Same as A1A5C4.	5-48
A1A17C2		CAPACITOR: Same as A1A5C4.	5-48
A1A17C3		CAPACITOR: Same as A1A5C5.	5-48
A1A17C4		CAPACITOR: Same as A1A5C5.	5-48
A1A17C5		CAPACITOR: Same as A1A5C5.	5-48
A1A17C6		CAPACITOR: Same as A1A5C4.	5-48
A1A17C7		CAPACITOR: Same as A1A5C4.	5-48
A1A17C8		CAPACITOR: Same as A1A5C5.	5-48
A1A17C9		CAPACITOR: Same as A1A5C5.	5-48
A1A17C10		CAPACITOR: Same as A1A5C4.	5-48
A1A17C11		CAPACITOR: Same as A1A5C4.	5-48
A1A17C12		CAPACITOR: Same as A1A5C5.	5-48
A1A17C13		CAPACITOR: Same as A1A5C5.	5-48
A1A17C14		CAPACITOR: Same as A1A5C4.	5-48
A1A17C15		CAPACITOR: Same as A1A5C4.	5-48
A1A17C16		CAPACITOR: Same as A1A5C5.	5-48
A1A17C17		CAPACITOR: Same as A1A1C2.	5-48

TABLE 6-1. (Continued)

REF DESIG	NOTES	NAME AND DESCRIPTION	FIG. NO.
A1A17C18		CAPACITOR: Same as A1A1C2.	5-48
A1A17C19		CAPACITOR: Same as A1A5C25.	5-48
A1A17CR1		SEMICONDUCTOR DEVICE, DIODE: Same as A1A2CR1.	5-48
A1A17CR2		SEMICONDUCTOR DEVICE, DIODE: Same as A1A2CR1.	5-48
A1A17CR3		SEMICONDUCTOR DEVICE, DIODE: Same as A1A2CR1.	5-48
A1A17CR4		SEMICONDUCTOR DEVICE, DIODE: Same as A1A2CR1.	5-48
A1A17CR5		SEMICONDUCTOR DEVICE, DIODE: Same as A1A2CR1.	5-48
A1A17CR6		SEMICONDUCTOR DEVICE, DIODE: Same as A1A2CR1.	5-48
A1A17CR7		SEMICONDUCTOR DEVICE, DIODE: Same as A1A2CR1.	5-48
A1A17CR8		SEMICONDUCTOR DEVICE, DIODE: Same as A1A2CR1.	5-48
A1A17CR9		SEMICONDUCTOR DEVICE, DIODE: Same as A1A2CR1.	5-48
A1A17CR10		SEMICONDUCTOR DEVICE, DIODE: Same as A1A2CR1.	5-48
A1A17CR11		SEMICONDUCTOR DEVICE, DIODE: Same as A1A2CR1.	5-48
A1A17CR12		SEMICONDUCTOR DEVICE, DIODE: Same as A1A2CR1.	5-48
A1A17CR13		SEMICONDUCTOR DEVICE, DIODE: Same as A1A2CR1.	5-48
A1A17CR14		SEMICONDUCTOR DEVICE, DIODE: Same as A1A2CR1.	5-48
A1A17CR15		SEMICONDUCTOR DEVICE, DIODE: Same as A1A2CR1.	5-48
A1A17CR16		SEMICONDUCTOR DEVICE, DIODE: Same as A1A2CR1.	5-48
A1A17CR17		SEMICONDUCTOR DEVICE, DIODE: Same as A1A5CR2.	5-48
A1A17CR18		SEMICONDUCTOR DEVICE, DIODE: Same as A1A5CR2.	5-48
A1A17CR19		SEMICONDUCTOR DEVICE, DIODE: Same as A1A5CR2.	5-48
A1A17CR20		SEMICONDUCTOR DEVICE, DIODE: Same as A1A5CR2.	5-48
A1A17CR21		SEMICONDUCTOR DEVICE, DIODE: Same as A1A5CR2.	5-48
A1A17CR22		SEMICONDUCTOR DEVICE, DIODE: Same as A1A5CR2.	5-48
A1A17CR23		SEMICONDUCTOR DEVICE, DIODE: Same as A1A5CR2.	5-48
A1A17CR24		SEMICONDUCTOR DEVICE, DIODE: Same as A1A5CR2.	5-48
A1A17CR25		SEMICONDUCTOR DEVICE, DIODE: Same as A1A5CR2.	5-48
A1A17CR26		SEMICONDUCTOR DEVICE, DIODE: Same as A1A5CR2.	5-48
A1A17CR27		SEMICONDUCTOR DEVICE, DIODE: Same as A1A5CR2.	5-48
A1A17CR28		SEMICONDUCTOR DEVICE, DIODE: Same as A1A5CR2.	5-48
A1A17CR29		SEMICONDUCTOR DEVICE, DIODE: Same as A1A5CR2.	5-48
A1A17CR30		SEMICONDUCTOR DEVICE, DIODE: Same as A1A5CR2.	5-48
A1A17CR31		SEMICONDUCTOR DEVICE, DIODE: Same as A1A5CR2.	5-48
A1A17CR32		SEMICONDUCTOR DEVICE, DIODE: Same as A1A5CR2.	5-48
A1A17CR33		SEMICONDUCTOR DEVICE, DIODE: Same as A1A5CR2.	5-48
A1A17CR34		SEMICONDUCTOR DEVICE, DIODE: Same as A1A5CR2.	5-48
A1A17CR35		SEMICONDUCTOR DEVICE, DIODE: Same as A1A5CR2.	5-48
A1A17CR36		SEMICONDUCTOR DEVICE, DIODE: Same as A1A5CR2.	5-48
A1A17CR37		SEMICONDUCTOR DEVICE, DIODE: Same as A1A5CR2.	5-48
A1A17CR38		SEMICONDUCTOR DEVICE, DIODE: Same as A1A5CR2.	5-48
A1A17CR39		SEMICONDUCTOR DEVICE, DIODE: Same as A1A5CR2.	5-48
A1A17CR40		SEMICONDUCTOR DEVICE, DIODE: Same as A1A5CR2.	5-48
A1A17CR41		SEMICONDUCTOR DEVICE, DIODE: Same as A1A5CR2.	5-48
A1A17CR42		SEMICONDUCTOR DEVICE, DIODE: Same as A1A5CR2.	5-48
A1A17DS1		LAMP, GLOW: Same as A1A12DS1.	5-48
A1A17E1		TERMINAL, STUD, TP1: Same as A1A1E1.	5-48
A1A17E2		TERMINAL, STUD, TP2: Same as A1A1E1.	5-48
A1A17Q1		TRANSISTOR: Same as A1A12Q1.	5-48
A1A17Q2		TRANSISTOR: Same as A1A12Q1.	5-48
A1A17Q3		TRANSISTOR: Same as A1A12Q1.	5-48
A1A17Q4		TRANSISTOR: Same as A1A12Q1.	5-48

TABLE 6-1. (Continued)

REF DESIG	NOTES	NAME AND DESCRIPTION	FIG. NO.
A1A17Q5		TRANSISTOR: Same as A1A12Q5.	5-48
A1A17Q6		TRANSISTOR: Same as A1A12Q5.	5-48
A1A17Q7		TRANSISTOR: Same as A1A12Q5.	5-48
A1A17Q8		TRANSISTOR: Same as A1A12Q5.	5-48
A1A17Q9		TRANSISTOR: Same as A1A12Q5.	5-48
A1A17Q10		TRANSISTOR: Same as A1A5Q1.	5-48
A1A17Q11		TRANSISTOR: Same as A1A5Q1.	5-48
A1A17Q12		TRANSISTOR: Same as A1A5Q1.	5-48
A1A17Q13		TRANSISTOR: Same as A1A5Q1.	5-48
A1A17Q14		TRANSISTOR: Same as A1A5Q1.	5-48
A1A17Q15		TRANSISTOR: Same as A1A5Q1.	5-48
A1A17Q16		TRANSISTOR: Same as A1A5Q1.	5-48
A1A17Q17		TRANSISTOR: Same as A1A5Q1.	5-48
A1A17Q18		TRANSISTOR: Same as A1A1Q4.	5-48
A1A17R1		RESISTOR: Same as A1A12R1.	5-48
A1A17R2		RESISTOR: Same as A1A12R2.	5-48
A1A17R3		RESISTOR: Same as A1A12R2.	5-48
A1A17R4		RESISTOR: Same as A1A12R1.	5-48
A1A17R5		RESISTOR: Same as A1A12R5.	5-48
A1A17R6		RESISTOR: Same as A1A12R5.	5-48
A1A17R7		RESISTOR: Same as A1A12R7.	5-48
A1A17R8		RESISTOR: Same as A1A2R6.	5-48
A1A17R9		RESISTOR: Same as A1A2R6.	5-48
A1A17R10		RESISTOR: Same as A1A12R7.	5-48
A1A17R11		RESISTOR: Same as A1A10R44.	5-48
A1A17R12		RESISTOR: Same as A1A10R44.	5-48
A1A17R13		RESISTOR: Same as A1A12R13.	5-48
A1A17R14		Not Used.	
A1A17R15		Not Used.	
A1A17R16		RESISTOR: Same as A1A12R13.	5-48
A1A17R17		RESISTOR: Same as A1A2R3.	5-48
A1A17R18		RESISTOR: Same as A1A6R28.	5-48
A1A17R19		RESISTOR: Same as A1A1R6.	5-48
A1A17R20		RESISTOR: Same as A1A10R44.	5-48
A1A17R21		RESISTOR: Same as A1A2R3.	5-48
A1A17R22		RESISTOR: Same as A1A6R28.	5-48
A1A17R23		RESISTOR: Same as A1A1R6.	5-48
A1A17R24		RESISTOR: Same as A1A10R44.	5-48
A1A17R25		RESISTOR: Same as A1A2R3.	5-48
A1A17R26		RESISTOR: Same as A1A6R28.	5-48
A1A17R27		RESISTOR: Same as A1A1R6.	5-48
A1A17R28		RESISTOR: Same as A1A10R44.	5-48
A1A17R29		RESISTOR: Same as A1A2R3.	5-48
A1A17R30		RESISTOR: Same as A1A6R28.	5-48
A1A17R31		RESISTOR: Same as A1A1R6.	5-48
A1A17R32		RESISTOR: Same as A1A10R44.	5-48
A1A17R33		RESISTOR: Same as A1A2R3.	5-48
A1A17R34		RESISTOR: Same as A1A6R28.	5-48
A1A17R35		RESISTOR: Same as A1A1R6.	5-48
A1A17R36		RESISTOR: Same as A1A10R44.	5-48
A1A17R37		RESISTOR: Same as A1A12R37.	5-48

TABLE 6-1. (Continued)

REF DESIG	NOTES	NAME AND DESCRIPTION	FIG. NO.
A1A17R38		RESISTOR: Same as A1A2R4.	5-48
A1A17R39		RESISTOR: Same as A1A2R4.	5-48
A1A17R40		RESISTOR: Same as A1A2R4.	5-48
A1A17R41		RESISTOR: Same as A1A2R4.	5-48
A1A17R42		RESISTOR: Same as A1A2R44.	5-48
A1A17R43		RESISTOR: Same as A1A1R6.	5-48
A1A17R44		RESISTOR: Same as A1A2R44.	5-48
A1A17R45		RESISTOR: Same as A1A2R3.	5-48
A1A17R46		RESISTOR: MIL type RC07GF393J.	5-48
A1A17R47		RESISTOR: Same as A1A17R46.	5-48
A1A17R48		RESISTOR: Same as A1A2R45.	5-48
A1A17R49		RESISTOR: Same as A1A2R3.	5-48
A1A17R50		RESISTOR: Same as A1A1R6.	5-48
A1A17R51		RESISTOR: Same as A1A2R44.	5-48
A1A17R52		RESISTOR: Same as A1A2R44.	5-48
A1A17R53		RESISTOR: Same as A1A2R4.	5-48
A1A17R54		RESISTOR: Same as A1A1R6.	5-48
A1A17R55		RESISTOR: Same as A1A2R3.	5-48
A1A17R56		RESISTOR: Same as A1A17R46.	5-48
A1A17R57		RESISTOR: Same as A1A17R46.	5-48
A1A17R58		RESISTOR: Same as A1A2R45.	5-48
A1A17R59		RESISTOR: Same as A1A2R3.	5-48
A1A17R60		RESISTOR: Same as A1A1R6.	5-48
A1A17R61		RESISTOR: Same as A1A2R4.	5-48
A1A17R62		RESISTOR: Same as A1A2R1.	5-48
A1A17R63		RESISTOR: Same as A1A2R4.	5-48
A1A17R64		RESISTOR: Same as A1A1R6.	5-48
A1A17R65		RESISTOR: Same as A1A2R3.	5-48
A1A17R66		RESISTOR: Same as A1A17R46.	5-48
A1A17R67		RESISTOR: Same as A1A17R46.	5-48
A1A17R68		RESISTOR: Same as A1A2R45.	5-48
A1A17R69		RESISTOR: Same as A1A2R3.	5-48
A1A17R70		RESISTOR: Same as A1A1R6.	5-48
A1A17R71		RESISTOR: Same as A1A2R4.	5-48
A1A17R72		RESISTOR: Same as A1A2R4.	5-48
A1A17R73		RESISTOR: Same as A1A6R20.	5-48
A1A17R74		RESISTOR: Same as A1A2R42.	5-48
A1A17R75		RESISTOR: Same as A1A2R44.	5-48
A1A17R76		RESISTOR: Same as A1A2R3.	5-48
A1A17R77		RESISTOR: Same as A1A17R46.	5-48
A1A17R78		RESISTOR: Same as A1A17R46.	5-48
A1A17R79		RESISTOR: Same as A1A2R45.	5-48
A1A17R80		RESISTOR: Same as A1A2R3.	5-48
A1A17R81		RESISTOR: Same as A1A6R20.	5-48
A1A17R82		RESISTOR: Same as A1A2R1.	5-48
A1A17R83		RESISTOR: Same as A1A2R4.	5-48
A1A17XDS1		SOCKET, ELECTRON TUBE: Same as A1A12XDS1.	5-48
A1A18		FREQUENCY DIVIDER-DIGITAL DISPLAY INDICATOR: Same as A1A17.	5-48
A1A18C1		CAPACITOR: Same as A1A5C4.	5-48
A1A18C2		CAPACITOR: Same as A1A5C4.	5-48
A1A18C3		CAPACITOR: Same as A1A5C5.	5-48
A1A18C4		CAPACITOR: Same as A1A5C5.	5-48
A1A18C5		CAPACITOR: Same as A1A5C5.	5-48
A1A18C6		CAPACITOR: Same as A1A5C4.	5-48
A1A18C7		CAPACITOR: Same as A1A5C4.	5-48
A1A18C8		CAPACITOR: Same as A1A5C5.	5-48

TABLE 6-1. (Continued)

REF DESIG	NOTES	NAME AND DESCRIPTION	FIG. NO.
A1A18C9		CAPACITOR: Same as A1A5C5.	5-48
A1A18C10		CAPACITOR: Same as A1A5C4.	5-48
A1A18C11		CAPACITOR: Same as A1A5C4.	5-48
A1A18C12		CAPACITOR: Same as A1A5C5.	5-48
A1A18C13		CAPACITOR: Same as A1A5C5.	5-48
A1A18C14		CAPACITOR: Same as A1A5C4.	5-48
A1A18C15		CAPACITOR: Same as A1A5C4.	5-48
A1A18C16		CAPACITOR: Same as A1A5C5.	5-48
A1A18C17		CAPACITOR: Same as A1A1C2.	5-48
A1A18C18		CAPACITOR: Same as A1A1C2.	5-48
A1A18C19		CAPACITOR: Same as A1A5C25.	5-48
A1A18CR1		SEMICONDUCTOR DEVICE, DIODE: Same as A1A2CR1.	5-48
A1A18CR2		SEMICONDUCTOR DEVICE, DIODE: Same as A1A2CR1.	5-48
A1A18CR3		SEMICONDUCTOR DEVICE, DIODE: Same as A1A2CR1.	5-48
A1A18CR4		SEMICONDUCTOR DEVICE, DIODE: Same as A1A2CR1.	5-48
A1A18CR5		SEMICONDUCTOR DEVICE, DIODE: Same as A1A2CR1.	5-48
A1A18CR6		SEMICONDUCTOR DEVICE, DIODE: Same as A1A2CR1.	5-48
A1A18CR7		SEMICONDUCTOR DEVICE, DIODE: Same as A1A2CR1.	5-48
A1A18CR8		SEMICONDUCTOR DEVICE, DIODE: Same as A1A2CR1.	5-48
A1A18CR9		SEMICONDUCTOR DEVICE, DIODE: Same as A1A2CR1.	5-48
A1A18CR10		SEMICONDUCTOR DEVICE, DIODE: Same as A1A2CR1.	5-48
A1A18CR11		SEMICONDUCTOR DEVICE, DIODE: Same as A1A2CR1.	5-48
A1A18CR12		SEMICONDUCTOR DEVICE, DIODE: Same as A1A2CR1.	5-48
A1A18CR13		SEMICONDUCTOR DEVICE, DIODE: Same as A1A2CR1.	5-48
A1A18CR14		SEMICONDUCTOR DEVICE, DIODE: Same as A1A2CR1.	5-48
A1A18CR15		SEMICONDUCTOR DEVICE, DIODE: Same as A1A2CR1.	5-48
A1A18CR16		SEMICONDUCTOR DEVICE, DIODE: Same as A1A2CR1.	5-48
A1A18CR17		SEMICONDUCTOR DEVICE, DIODE: Same as A1A5CR2.	5-48
A1A18CR18		SEMICONDUCTOR DEVICE, DIODE: Same as A1A5CR2.	5-48
A1A18CR19		SEMICONDUCTOR DEVICE, DIODE: Same as A1A5CR2.	5-48
A1A18CR20		SEMICONDUCTOR DEVICE, DIODE: Same as A1A5CR2.	5-48
A1A18CR21		SEMICONDUCTOR DEVICE, DIODE: Same as A1A5CR2.	5-48
A1A18CR22		SEMICONDUCTOR DEVICE, DIODE: Same as A1A5CR2.	5-48
A1A18CR23		SEMICONDUCTOR DEVICE, DIODE: Same as A1A5CR2.	5-48
A1A18CR24		SEMICONDUCTOR DEVICE, DIODE: Same as A1A5CR2.	5-48
A1A18CR25		SEMICONDUCTOR DEVICE, DIODE: Same as A1A5CR2.	5-48
A1A18CR26		SEMICONDUCTOR DEVICE, DIODE: Same as A1A5CR2.	5-48
A1A18CR27		SEMICONDUCTOR DEVICE, DIODE: Same as A1A5CR2.	5-48
A1A18CR28		SEMICONDUCTOR DEVICE, DIODE: Same as A1A5CR2.	5-48
A1A18CR29		SEMICONDUCTOR DEVICE, DIODE: Same as A1A5CR2.	5-48
A1A18CR30		SEMICONDUCTOR DEVICE, DIODE: Same as A1A5CR2.	5-48
A1A18CR31		SEMICONDUCTOR DEVICE, DIODE: Same as A1A5CR2.	5-48
A1A18CR32		SEMICONDUCTOR DEVICE, DIODE: Same as A1A5CR2.	5-48
A1A18CR33		SEMICONDUCTOR DEVICE, DIODE: Same as A1A5CR2.	5-48
A1A18CR34		SEMICONDUCTOR DEVICE, DIODE: Same as A1A5CR2.	5-48
A1A18CR35		SEMICONDUCTOR DEVICE, DIODE: Same as A1A5CR2.	5-48
A1A18CR36		SEMICONDUCTOR DEVICE, DIODE: Same as A1A5CR2.	5-48
A1A18CR37		SEMICONDUCTOR DEVICE, DIODE: Same as A1A5CR2.	5-48
A1A18CR38		SEMICONDUCTOR DEVICE, DIODE: Same as A1A5CR2.	5-48
A1A18CR39		SEMICONDUCTOR DEVICE, DIODE: Same as A1A5CR2.	5-48
A1A18CR40		SEMICONDUCTOR DEVICE, DIODE: Same as A1A5CR2.	5-48
A1A18CR41		SEMICONDUCTOR DEVICE, DIODE: Same as A1A5CR2.	5-48
A1A18CR42		SEMICONDUCTOR DEVICE, DIODE: Same as A1A5CR2.	5-48
A1A18DS1		LAMP, GLOW: Same as A1A12DS1.	5-48
A1A18E1		TERMINAL, STUD, TP1: Same as A1A1E1.	5-48
A1A18E2		TERMINAL, STUD, TP2: Same as A1A1E1.	5-48

TABLE 6-1. (Continued)

REF DESIG	NOTES	NAME AND DESCRIPTION	FIG. NO.
A1A18Q1		TRANSISTOR: Same as A1A12Q1.	5-48
A1A18Q2		TRANSISTOR: Same as A1A12Q1.	5-48
A1A18Q3		TRANSISTOR: Same as A1A12Q1.	5-48
A1A18Q4		TRANSISTOR: Same as A1A12Q1.	5-48
A1A18Q5		TRANSISTOR: Same as A1A12Q5.	5-48
A1A18Q6		TRANSISTOR: Same as A1A12Q5.	5-48
A1A18Q7		TRANSISTOR: Same as A1A12Q5.	5-48
A1A18Q8		TRANSISTOR: Same as A1A12Q5.	5-48
A1A18Q9		TRANSISTOR: Same as A1A12Q5.	5-48
A1A18Q10		TRANSISTOR: Same as A1A5Q1.	5-48
A1A18Q11		TRANSISTOR: Same as A1A5Q1.	5-48
A1A18Q12		TRANSISTOR: Same as A1A5Q1.	5-48
A1A18Q13		TRANSISTOR: Same as A1A5Q1.	5-48
A1A18Q14		TRANSISTOR: Same as A1A5Q1.	5-48
A1A18Q15		TRANSISTOR: Same as A1A5Q1.	5-48
A1A18Q16		TRANSISTOR: Same as A1A5Q1.	5-48
A1A18Q17		TRANSISTOR: Same as A1A5Q1.	5-48
A1A18Q18		TRANSISTOR: Same as A1A1Q4.	5-48
A1A18R1		RESISTOR: Same as A1A12R1.	5-48
A1A18R2		RESISTOR: Same as A1A12R2.	5-48
A1A18R3		RESISTOR: Same as A1A12R2.	5-48
A1A18R4		RESISTOR: Same as A1A12R1.	5-48
A1A18R5		RESISTOR: Same as A1A12R5.	5-48
A1A18R6		RESISTOR: Same as A1A12R5.	5-48
A1A18R7		RESISTOR: Same as A1A12R7.	5-48
A1A18R8		RESISTOR: Same as A1A2R6.	5-48
A1A18R9		RESISTOR: Same as A1A2R6.	5-48
A1A18R10		RESISTOR: Same as A1A12R7.	5-48
A1A18R11		RESISTOR: Same as A1A10R44.	5-48
A1A18R12		RESISTOR: Same as A1A10R44.	5-48
A1A18R13		RESISTOR: Same as A1A12R13.	5-48
A1A18R14		Not Used.	
A1A18R15		Not Used.	
A1A18R16		RESISTOR: Same as A1A12R13.	5-48
A1A18R17		RESISTOR: Same as A1A2R3.	5-48
A1A18R18		RESISTOR: Same as A1A6R28.	5-48
A1A18R19		RESISTOR: Same as A1A1R6.	5-48
A1A18R20		RESISTOR: Same as A1A10R44.	5-48
A1A18R21		RESISTOR: Same as A1A2R3.	5-48
A1A18R22		RESISTOR: Same as A1A6R28.	5-48
A1A18R23		RESISTOR: Same as A1A1R6.	5-48
A1A18R24		RESISTOR: Same as A1A10R44.	5-48
A1A18R25		RESISTOR: Same as A1A2R3.	5-48
A1A18R26		RESISTOR: Same as A1A6R28.	5-48
A1A18R27		RESISTOR: Same as A1A1R6.	5-48
A1A18R28		RESISTOR: Same as A1A10R44.	5-48
A1A18R29		RESISTOR: Same as A1A2R3.	5-48
A1A18R30		RESISTOR: Same as A1A6R28.	5-48
A1A18R31		RESISTOR: Same as A1A1R6.	5-48
A1A18R32		RESISTOR: Same as A1A10R44.	5-48
A1A18R33		RESISTOR: Same as A1A2R3.	5-48
A1A18R34		RESISTOR: Same as A1A6R28.	5-48
A1A18R35		RESISTOR: Same as A1A1R6.	5-48
A1A18R36		RESISTOR: Same as A1A10R44.	5-48
A1A18R37		RESISTOR: Same as A1A12R37.	5-48
A1A18R38		RESISTOR: Same as A1A2R4.	5-48
A1A18R39		RESISTOR: Same as A1A2R4.	5-48

TABLE 6-1. (Continued)

REF DESIG	NOTES	NAME AND DESCRIPTION	FIG. NO.
A1A18R40		RESISTOR: Same as A1A2R4.	5-48
A1A18R41		RESISTOR: Same as A1A2R4.	5-48
A1A18R42		RESISTOR: Same as A1A2R44.	5-48
A1A18R43		RESISTOR: Same as A1A1R6.	5-48
A1A18R44		RESISTOR: Same as A1A2R44.	5-48
A1A18R45		RESISTOR: Same as A1A2R3.	5-48
A1A18R46		RESISTOR: Same as A1A17R46.	5-48
A1A18R47		RESISTOR: Same as A1A17R46.	5-48
A1A18R48		RESISTOR: Same as A1A2R45.	5-48
A1A18R49		RESISTOR: Same as A1A2R3.	5-48
A1A18R50		RESISTOR: Same as A1A1R6.	5-48
A1A18R51		RESISTOR: Same as A1A2R44.	5-48
A1A18R52		RESISTOR: Same as A1A2R44.	5-48
A1A18R53		RESISTOR: Same as A1A2R4.	5-48
A1A18R54		RESISTOR: Same as A1A1R6.	5-48
A1A18R55		RESISTOR: Same as A1A2R3.	5-48
A1A18R56		RESISTOR: Same as A1A17R46.	5-48
A1A18R57		RESISTOR: Same as A1A17R46.	5-48
A1A18R58		RESISTOR: Same as A1A2R45.	5-48
A1A18R59		RESISTOR: Same as A1A2R3.	5-48
A1A18R60		RESISTOR: Same as A1A1R6.	5-48
A1A18R61		RESISTOR: Same as A1A2R4.	5-48
A1A18R62		RESISTOR: Same as A1A2R1.	5-48
A1A18R63		RESISTOR: Same as A1A2R4.	5-48
A1A18R64		RESISTOR: Same as A1A1R6.	5-48
A1A18R65		RESISTOR: Same as A1A2R3.	5-48
A1A18R66		RESISTOR: Same as A1A17R46.	5-48
A1A18R67		RESISTOR: Same as A1A17R46.	5-48
A1A18R68		RESISTOR: Same as A1A2R45.	5-48
A1A18R69		RESISTOR: Same as A1A2R3.	5-48
A1A18R70		RESISTOR: Same as A1A1R6.	5-48
A1A18R71		RESISTOR: Same as A1A2R4.	5-48
A1A18R72		RESISTOR: Same as A1A2R4.	5-48
A1A18R73		RESISTOR: Same as A1A6R20.	5-48
A1A18R74		RESISTOR: Same as A1A2R42.	5-48
A1A18R75		RESISTOR: Same as A1A2R44.	5-48
A1A18R76		RESISTOR: Same as A1A2R3.	5-48
A1A18R77		RESISTOR: Same as A1A17R46.	5-48
A1A18R78		RESISTOR: Same as A1A17R46.	5-48
A1A18R79		RESISTOR: Same as A1A2R45.	5-48
A1A18R80		RESISTOR: Same as A1A2R3.	5-48
A1A18R81		RESISTOR: Same as A1A6R20.	5-48
A1A18R82		RESISTOR: Same as A1A2R1.	5-48
A1A18R83		RESISTOR: Same as A1A2R4.	5-48
A1A18XDS1		SOCKET, ELECTRON TUBE: Same as A1A12XDS1.	5-48
A1A19		FREQUENCY DIVIDER—DIGITAL DISPLAY INDICATOR: Printed circuit board w/all components assembled for operation; mfr CMC, dwg MP93-525L6.	5-49
A1A19C1		CAPACITOR: Same as A1A5C24.	5-49
A1A19C2		CAPACITOR: Same as A1A1C2.	5-49
A1A19C3		CAPACITOR: Same as A1A5C25.	5-49
A1A19C4		CAPACITOR: Same as A1A5C25.	5-49
A1A19C5		CAPACITOR: Same as A1A1C2.	5-49
A1A19C6		CAPACITOR: Same as A1A1C2.	5-49
A1A19CR1		SEMICONDUCTOR DEVICE, DIODE: Same as A1A2CR1.	5-49
A1A19CR2		SEMICONDUCTOR DEVICE, DIODE: Same as A1A2CR1.	5-49
A1A19CR3		SEMICONDUCTOR DEVICE, DIODE: Same as A1A2CR1.	5-49

TABLE 6-1. (Continued)

REF DESIG	NOTES	NAME AND DESCRIPTION	FIG. NO.
A1A19CR4		SEMICONDUCTOR DEVICE, DIODE: Same as A1A2CR1.	5-49
A1A19CR5		SEMICONDUCTOR DEVICE, DIODE: Same as A1A2CR1.	5-49
A1A19CR6		SEMICONDUCTOR DEVICE, DIODE: Same as A1A2CR1.	5-49
A1A19CR7		SEMICONDUCTOR DEVICE, DIODE: Same as A1A2CR1.	5-49
A1A19CR8		SEMICONDUCTOR DEVICE, DIODE: Same as A1A2CR1.	5-49
A1A19CR9		SEMICONDUCTOR DEVICE, DIODE: Same as A1A2CR1.	5-49
A1A19CR10		SEMICONDUCTOR DEVICE, DIODE: Same as A1A2CR1.	5-49
A1A19CR11		SEMICONDUCTOR DEVICE, DIODE: Same as A1A2CR1.	5-49
A1A19CR12		SEMICONDUCTOR DEVICE, DIODE: Same as A1A2CR1.	5-49
A1A19CR13		SEMICONDUCTOR DEVICE, DIODE: Same as A1A2CR1.	5-49
A1A19CR14		SEMICONDUCTOR DEVICE, DIODE: Same as A1A2CR1.	5-49
A1A19CR15		SEMICONDUCTOR DEVICE, DIODE: Same as A1A2CR1.	5-49
A1A19CR16		SEMICONDUCTOR DEVICE, DIODE: Same as A1A2CR1.	5-49
A1A19CR17		SEMICONDUCTOR DEVICE, DIODE: Same as A1A5CR2.	5-49
A1A19CR18		SEMICONDUCTOR DEVICE, DIODE: Same as A1A5CR2.	5-49
A1A19CR19		SEMICONDUCTOR DEVICE, DIODE: MIL type 1N746A.	5-49
A1A19DS1		LAMP, GLOW: Same as A1A12DS1.	5-49
A1A19E1		TERMINAL, STUD, TP1: Same as A1A1E1.	5-49
A1A19E2		TERMINAL, STUD, TP2: Same as A1A1E1.	5-49
A1A19E3		TERMINAL, STUD, TP3: Same as A1A1E1.	5-49
A1A19E4		TERMINAL, STUD, TP4: Same as A1A1E1.	5-49
A1A19E5		TERMINAL, STUD, TP5: Same as A1A1E1.	5-49
A1A19Q1		TRANSISTOR: Same as A1A12Q1.	5-49
A1A19Q2		TRANSISTOR: Same as A1A12Q1.	5-49
A1A19Q3		TRANSISTOR: Same as A1A12Q1.	5-49
A1A19Q4		TRANSISTOR: Same as A1A12Q1.	5-49
A1A19Q5		TRANSISTOR: Same as A1A12Q5.	5-49
A1A19Q6		TRANSISTOR: Same as A1A12Q5.	5-49
A1A19Q7		TRANSISTOR: Same as A1A12Q5.	5-49
A1A19Q8		TRANSISTOR: Same as A1A12Q5.	5-49
A1A19Q9		TRANSISTOR: Same as A1A12Q5.	5-49
A1A19Q10		TRANSISTOR: Same as A1A8Q6.	5-49
A1A19Q11		TRANSISTOR: Same as A1A5Q1.	5-49
A1A19Q12		TRANSISTOR: Same as A1A1Q4.	5-49
A1A19Q13		TRANSISTOR: Same as A1A1Q2.	5-49
A1A19Q14		TRANSISTOR: Same as A1A1Q4.	5-49
A1A19Q15		TRANSISTOR: Same as A1A1Q2.	5-49
A1A19Q16		TRANSISTOR: Same as A1A1Q4.	5-49
A1A19Q17		TRANSISTOR: Same as A1A1Q2.	5-49
A1A19Q18		TRANSISTOR: Same as A1A1Q4.	5-49
A1A19Q19		TRANSISTOR: Same as A1A1Q2.	5-49
A1A19Q20		TRANSISTOR: Same as A1A1Q4.	5-49
A1A19R1		RESISTOR: Same as A1A12R1.	5-49
A1A19R2		RESISTOR: Same as A1A12R2.	5-49
A1A19R3		RESISTOR: Same as A1A12R2.	5-49
A1A19R4		RESISTOR: Same as A1A12R1.	5-49
A1A19R5		RESISTOR: Same as A1A12R5.	5-49
A1A19R6		RESISTOR: Same as A1A12R5.	5-49
A1A19R7		RESISTOR: Same as A1A12R7.	5-49
A1A19R8		RESISTOR: Same as A1A2R6.	5-49
A1A19R9		RESISTOR: Same as A1A2R6.	5-49
A1A19R10		RESISTOR: Same as A1A12R7.	5-49
A1A19R11		RESISTOR: Same as A1A10R44.	5-49
A1A19R12		RESISTOR: Same as A1A12R44.	5-49
A1A19R13		RESISTOR: Same as A1A12R13.	5-49
A1A19R14		Not Used.	
A1A19R15		Not Used.	

TABLE 6-1. (Continued)

REF DESIG	NOTES	NAME AND DESCRIPTION	FIG. NO.
A1A19R16		RESISTOR: Same as A1A12R13.	5-49
A1A19R17		RESISTOR: Same as A1A2R3.	5-49
A1A19R18		RESISTOR: Same as A1A6R28.	5-49
A1A19R19		RESISTOR: Same as A1A1R6.	5-49
A1A19R20		RESISTOR: Same as A1A10R44.	5-49
A1A19R21		RESISTOR: Same as A1A2R3.	5-49
A1A19R22		RESISTOR: Same as A1A6R28.	5-49
A1A19R23		RESISTOR: Same as A1A1R6.	5-49
A1A19R24		RESISTOR: Same as A1A10R44.	5-49
A1A19R25		RESISTOR: Same as A1A2R3.	5-49
A1A19R26		RESISTOR: Same as A1A6R28.	5-49
A1A19R27		RESISTOR: Same as A1A1R6.	5-49
A1A19R28		RESISTOR: Same as A1A10R44.	5-49
A1A19R29		RESISTOR: Same as A1A2R3.	5-49
A1A19R30		RESISTOR: Same as A1A6R28.	5-49
A1A19R31		RESISTOR: Same as A1A1R6.	5-49
A1A19R32		RESISTOR: Same as A1A10R44.	5-49
A1A19R33		RESISTOR: Same as A1A2R3.	5-49
A1A19R34		RESISTOR: Same as A1A6R28.	5-49
A1A19R35		RESISTOR: Same as A1A1R6.	5-49
A1A19R36		RESISTOR: Same as A1A10R44.	5-49
A1A19R37		RESISTOR: Same as A1A12R37.	5-49
A1A19R38		RESISTOR: Same as A1A2R4.	5-49
A1A19R39		RESISTOR: Same as A1A2R4.	5-49
A1A19R40		RESISTOR: Same as A1A2R4.	5-49
A1A19R41		RESISTOR: Same as A1A2R12.	5-49
A1A19R42		RESISTOR: Same as A1A2R44.	5-49
A1A19R43		RESISTOR: Same as A1A2R4.	5-49
A1A19R44		RESISTOR: MIL type RL20AD152J.	5-49
A1A19R45		RESISTOR: Same as A1A2R12.	5-49
A1A19R46		RESISTOR: Same as A1A7R18.	5-49
A1A19R47		RESISTOR: Same as A1A11R7.	5-49
A1A19R48		RESISTOR: Same as A1A1R7.	5-49
A1A19R49		RESISTOR: Same as A1A8R29.	5-49
A1A19R50		RESISTOR: Same as A1A10R4.	5-49
A1A19R51		RESISTOR: Same as A1A2R44.	5-49
A1A19R52		RESISTOR: Same as A1A2R1.	5-49
A1A19R53		RESISTOR: Same as A1A6R3.	5-49
A1A19R54		RESISTOR: Same as A1A5R28.	5-49
A1A19R55		RESISTOR: Same as A1A2R44.	5-49
A1A19R56		RESISTOR: Same as A1A2R42.	5-49
A1A19R57		RESISTOR: Same as A1A2R42.	5-49
A1A19R58		RESISTOR: Same as A1A17R46.	5-49
A1A19R59		RESISTOR: Same as A1A2R44.	5-49
A1A19R60		RESISTOR: Same as A1A1R6.	5-49
A1A19R61		RESISTOR: Same as A1A1R6.	5-49
A1A19R62		RESISTOR: Same as A1A2R42.	5-49
A1A19R63		RESISTOR: Same as A1A17R46.	5-49
A1A19R64		RESISTOR: Same as A1A2R44.	5-49
A1A19R65		RESISTOR: Same as A1A1R6.	5-49
A1A19R66		RESISTOR: Same as A1A1R6.	5-49
A1A19R67		RESISTOR: Same as A1A2R42.	5-49
A1A19R68		RESISTOR: Same as A1A17R46.	5-49
A1A19R69		RESISTOR: Same as A1A2R44.	5-49
A1A19R70		RESISTOR: Same as A1A1R6.	5-49
A1A19R71		RESISTOR: Same as A1A1R6.	5-49
A1A19R72		RESISTOR: Same as A1A2R42.	5-49

TABLE 6-1. (Continued)

REF DESIG	NOTES	NAME AND DESCRIPTION	FIG. NO.
A1A19R73		RESISTOR: Same as A1A17R46.	5-49
A1A19R74		RESISTOR: Same as A1A2R44.	5-49
A1A19R75		RESISTOR: Same as A1A1R6.	5-49
A1A19R76		RESISTOR: Same as A1A1R6.	5-49
A1A19XDS1		SOCKET, ELECTRON TUBE: Same as A1A12XDS1.	5-49
A1A20		AMPLIFIER, AUDIO FREQUENCY—RADIO FREQUENCY: Printed circuit board w/all components assembled for operation; mfr CMC, dwg MP13-509L2.	5-50
A1A20C1 to A1A20C17		Not Used.	
A1A20C18		CAPACITOR: Same as A1A6C30.	5-50
A1A20C19		Not Used.	
A1A20C20		CAPACITOR: Same as A1A5C23.	5-50
A1A20C21		CAPACITOR: Same as A1A8C20.	5-50
A1A20C22		Not Used.	
A1A20C23		CAPACITOR: Same as A1A1C6.	5-50
A1A20C24		Not Used.	
A1A20C25		CAPACITOR: Same as A1A8C20.	5-50
A1A20C26		CAPACITOR: Same as A1A8C20.	5-50
A1A20C27		Not Used.	
A1A20C28		CAPACITOR: Same as A1A5C30.	5-50
A1A20C29		CAPACITOR: Same as A1A8C9.	5-50
A1A20C30		CAPACITOR: Same as A1A5C27.	5-50
A1A20C31		CAPACITOR: Same as A1A8C20.	5-50
A1A20C32		CAPACITOR: Same as A1A5C27.	5-50
A1A20C33 to A1A20C44		Not Used.	
A1A20C45		CAPACITOR: Same as A1A1C6.	5-50
A1A20CR1 to A1A20CR4		Not Used.	
A1A20CR5		SEMICONDUCTOR DEVICE, DIODE: Same as A1A10CR5.	5-50
A1A20CR6		SEMICONDUCTOR DEVICE, DIODE: Same as A1A5CR2.	5-50
A1A20CR7		SEMICONDUCTOR DEVICE, DIODE: Same as A1A19CR19.	5-50
A1A20Q1 to A1A20Q4		Not Used.	
A1A20Q5		TRANSISTOR: Same as A1A8Q6.	5-50
A1A20Q6		TRANSISTOR: Same as A1A11Q1.	5-50
A1A20Q7		TRANSISTOR: Same as A1A8Q8.	5-50
A1A20Q8		TRANSISTOR: Same as A1A8Q8.	5-50
A1A20R1 to A1A20R7		Not Used.	
A1A20R8		RESISTOR: Same as A1A10R52.	5-50
A1A20R9		RESISTOR: Same as A1A5R47.	5-50
A1A20R10		RESISTOR: MIL type RN65D1104F.	5-50
A1A20R11		RESISTOR: Same as A1A12R2.	5-50
A1A20R12		RESISTOR: Same as A1A6R56.	5-50
A1A20R13		RESISTOR: Same as A1A1R6.	5-50
A1A20R14		Not Used.	
A1A20R15		RESISTOR: Same as A1A9R84.	5-50
A1A20R16		RESISTOR: Same as A1A2R3.	5-50
A1A20R17		RESISTOR: Same as A1A6R9.	5-50
A1A20R18		RESISTOR: Same as A1A7R16.	5-50

TABLE 6-1. (Continued)

REF DESIG	NOTES	NAME AND DESCRIPTION	FIG. NO.
A1A20R19		RESISTOR: Same as A1A9R14.	5-50
A1A20R20		RESISTOR: Same as A1A8R29.	5-50
A1A21	1	ATTENUATOR, VARIABLE: Printed circuit board w/all components assembled for operation; mfr CMC, dwg MP13-523L4.	5-10
A1A21	2	ATTENUATOR, VARIABLE: Printed circuit board w/all components assembled for operation; mfr CMC, dwg MP13-537L1.	5-10
A1A21C1-C14		Not Used.	
A1A21C15	1	CAPACITOR: Same as A1A5C23.	5-10
A1A21C15	2	CAPACITOR: Same as A1A8C10.	5-10
A1A21C16		Not Used.	
A1A21C17	1	CAPACITOR: Same as A1A8C1.	5-10
A1A21C17	2	CAPACITOR, FIXED, CERAMIC DIELECTRIC: 2200 pf ±10%, 350 vdcw, standoff; mfr XOV, P/N CS-2-2220RK.	5-10
A1A21C18	2	CAPACITOR: Same as A1A6C45.	5-10
A1A21C19	2	CAPACITOR: MIL type CM05D330J03.	5-10
A1A21C20	2	CAPACITOR: MIL type CP05A1KF104K1.	5-9
A1A21C21	2	CAPACITOR: MIL type CM05D2R2J03.	5-10
A1A21CR1	2	SEMICONDUCTOR DEVICE, DIODE: Same as A1A2CR1.	5-10
A1A21E1		BEAD, FERRITE: Same as A1A8E5.	5-10
A1A21E2		BEAD, FERRITE: Same as A1A8E5.	5-10
A1A21E3		BEAD, FERRITE: Same as A1A8E5.	5-10
A1A21E4	2	BEAD, FERRITE: Same as A1A8E5.	5-10
A1A21E5-E10	2	TERMINAL: MIL type MIL-T-55155/4-1.	5-9
A1A21R1		Not Used.	
A1A21R2		RESISTOR: MIL type RN60D9093F.	5-10
A1A21R3		RESISTOR: Same as A1A12R13.	5-10
A1A21R4		RESISTOR: MIL type RC07GF105J.	5-10
A1A21R5		RESISTOR: Same as A1A2R4.	5-10
A1A21R6		RESISTOR: Same as A1A21R4.	5-10
A1A21R7		RESISTOR: Same as A1A1R6.	5-10
A1A21R8-R48		Not Used.	
A1A21R49	1	RESISTOR: Same as A1A5R43.	5-10
A1A21R49	2	RESISTOR: Same as A1A6R33.	5-10
A1A21S1-S6		Not Used.	
A1A21S7		SWITCH ROTARY: 3 sections, 7 positions, nonshorting contacts; mfr OAK, P/N SR05N30B1MP.	5-10
A1A22		ATTENUATOR-RESISTOR, VARIABLE: Printed circuit board w/all components assembled for operation; mfr CMC, dwg MP13-524L4.	5-11
A1A22C1-C33		Not Used.	
A1A22C34		CAPACITOR: Same as A1A6C30.	5-11
A1A22C35		CAPACITOR: Same as A1A21C21.	5-11
A1A22C36		CAPACITOR: Same as A1A5C30.	5-11
A1A22C37		CAPACITOR: MIL type CM06D821J03.	5-11
A1A22C38		CAPACITOR: Same as A1A22C37.	5-11
A1A22C39		CAPACITOR: Same as A1A7C5.	5-11
A1A22C40-C45		Not Used.	
A1A22C46		CAPACITOR: Same as A1A6C30.	5-11
A1A22R1-R20		Not Used.	
A1A22R21		RESISTOR: MIL type RN60D6813F.	5-11
A1A22R22		RESISTOR: MIL type RN60D5113F.	5-11
A1A22R23		RESISTOR: MIL type RN70D9093F.	5-11
A1A22R24		RESISTOR: MIL type RN60D1103F.	5-11
A1A22R25		RESISTOR: MIL type RN70D9763F.	5-11
A1A22R26		RESISTOR: Same as A1A2R6.	5-11

TABLE 6-1. (Continued)

REF DESIG	NOTES	NAME AND DESCRIPTION	FIG. NO.
A1A22R27		RESISTOR: MIL type RN70D1004F.	5-11
A1A22R28		RESISTOR: Same as A1A2R4.	5-11
A1A22R29		RESISTOR: Same as A1A22R27.	5-11
A1A22R30		RESISTOR: Same as A1A6R28.	5-11
A1A22R31		RESISTOR: Same as A1A22R27.	5-11
A1A22R32		RESISTOR: Same as A1A1R6.	5-11
A1A22R33		RESISTOR, VARIABLE: 100 ohms ±10%, composition, single section; mfr CMC, dwg MP5000176.	5-11
A1A22R34 to A1A22R49		Not Used.	
A1A22R50		RESISTOR: Same as A1A10R44.	5-11
A1A22S1 to A1A22S7		Not Used.	
A1A22S8		SWITCH, ROTARY: 2 sections, 7 positions, enclosed type; mfr CMC, dwg MP4701182.	5-11
A1A23		ATTENUATOR—RESISTOR, VARIABLE: Same as A1A22.	5-12
A1A23C1 to A1A23C39		Not Used.	
A1A23C40		CAPACITOR: Same as A1A6C30.	5-12
A1A23C41		CAPACITOR: Same as A1A21C21.	5-12
A1A23C42		CAPACITOR: Same as A1A5C30.	5-12
A1A23C43		CAPACITOR: Same as A1A22C37.	5-12
A1A23C44		CAPACITOR:	5-12
A1A23C45		Not Used.	
A1A23C46		Not Used.	
A1A23C47		CAPACITOR: Same as A1A6C30.	5-12
A1A23R1 to A1A23R33		Not Used.	
A1A23R34		RESISTOR: Same as A1A22R21.	5-12
A1A23R35		RESISTOR: Same as A1A22R22.	5-12
A1A23R36		RESISTOR: Same as A1A22R23.	5-12
A1A23R37		RESISTOR: Same as A1A22R24.	5-12
A1A23R38		RESISTOR: Same as A1A22R25.	5-12
A1A23R39		RESISTOR: Same as A1A2R6.	5-12
A1A23R40		RESISTOR: Same as A1A22R27.	5-12
A1A23R41		RESISTOR: Same as A1A2R4.	5-12
A1A23R42		RESISTOR: Same as A1A22R27.	5-12
A1A23R43		RESISTOR: Same as A1A6R28.	5-12
A1A23R44		RESISTOR: Same as A1A22R27.	5-12
A1A23R45		RESISTOR: Same as A1A1R6.	5-12
A1A23R46		RESISTOR: Same as A1A22R33.	5-12
A1A23R47 to A1A23R50		Not Used.	
A1A23R51		RESISTOR: Same as A1A10R44.	5-12
A1A23S1 to A1A23S10		Not Used.	
A1A23S11		SWITCH: Same as A1A22S8.	5-12
A1B1		MOTOR, ALTERNATING CURRENT: 50-400 cps, 115 vrms, 1 phase, 25 watts; mfr CMC, dwg MP4501058.	5-33
A1C1		CAPACITOR: MIL type CH05A1NE474M.	5-33
A1C2		CAPACITOR, FIXED, ELECTROLYTIC: 4600 μf, 25 vdcw; mfr SN, P/N 500-1042-01.	5-34
A1C3		CAPACITOR, FIXED, ELECTROLYTIC: 510 μf, 75 vdcw; mfr SN, P/N 500-1065-01.	5-34

TABLE 6-1. (Continued)

REF DESIG	NOTES	NAME AND DESCRIPTION	FIG. NO.
A1C4		CAPACITOR: Same as A1A1C7.	5-34
A1C5		CAPACITOR, FIXED, ELECTROLYTIC: 9500 μf, 25 vdcw; mfr SN, P/N 500-1947-01.	5-34
A1C6		CAPACITOR: MIL type CS13AE101K.	5-34
A1C7		CAPACITOR: MIL type CE41C101N.	5-34
A1C8		CAPACITOR: Same as A1C6.	5-34
A1C9		CAPACITOR: Same as A1A1C1.	5-34
A1C10	1	CAPACITOR: Same as A1A21C20.	5-9
A1C11		CAPACITOR: Same as A1A6C3.	5-14
A1C12		CAPACITOR: Same as A1A6C3.	5-15
A1C13 to A1C32		Not Used.	
A1C33		CAPACITOR: Same as A1C10.	5-9
A1C34 to A1C38		Not Used.	
A1C39		CAPACITOR: Same as A1C10.	5-9
A1C40		CAPACITOR: Same as A1A7C5.	5-34
A1C41		CAPACITOR: Same as A1A7C5.	5-34
A1CR1		SEMICONDUCTOR DEVICE, DIODE: MIL type 1N1124A.	5-34
A1CR2		SEMICONDUCTOR DEVICE, DIODE: Same as A1CR1.	5-34
A1CR3		SEMICONDUCTOR DEVICE, DIODE: Same as A1CR1.	5-34
A1CR4		SEMICONDUCTOR DEVICE, DIODE: Same as A1CR1.	5-34
A1CR5		SEMICONDUCTOR DEVICE, DIODE: Same as A1A5CR2.	5-34
A1DS1		LAMP: MIL type MS25252-NE2D.	5-35
A1DS2		LAMP, CARTRIDGE: MIL type MS25446-3.	5-35
A1DS3		LAMP, CARTRIDGE: MIL type MS25446-6.	5-35
A1DS4		LAMP, GLOW: Neon, 95 vac starting voltage, 1/10 watt, 0.8 ma, T-2 bulb; mfr GE, P/N A1C.	5-35
A1DS5		LAMP: Same as A1DS4.	5-35
A1DS6		LAMP: Same as A1DS4.	5-35
A1DS7		LAMP: Same as A1DS4.	5-35
A1DS8		LAMP: Same as A1DS4.	5-35
A1DS9		LAMP: Same as A1DS4.	5-35
A1DS10		LAMP: Same as A1DS4.	5-35
A1DS11		LAMP: Same as A1DS4.	5-17
A1DS12		LAMP: Same as A1DS4.	5-17
A1DS13		LAMP: Same as A1DS4.	5-17
A1DS14		LAMP: Same as A1DS4.	5-17
A1DS15		LAMP: Same as A1DS4.	5-17
A1F1		FUSE: MIL type MS23419/1-018.	5-36
A1F2		FUSE: Same as A1F1.	5-36
A1FL1		FILTER, LINE: 115 vac, 2 amps, 60/400 cps; mfr CMC, dwg MP4096004.	5-34
A1J1		CONNECTOR: MIL type MS27035-6252.	5-9
A1J2		CONNECTOR: Same as A1J1.	5-9
A1J3		CONNECTOR: Same as A1J1.	5-9
A1J4		CONNECTOR: Same as A1J1.	5-9
A1J5		CONNECTOR: Same as A1J1.	5-9
A1J6		CONNECTOR: Same as A1J1.	5-37
A1J7		CONNECTOR: Same as A1J1.	5-37
A1J8		CONNECTOR, RECEPTACLE, ELECTRICAL: 15 solder cup contacts for No. 20 AWG wire, molded body; mfr ATL, P/N MS15S-20-SPMP-GDF.	5-33
A1J9		CONNECTOR: Same as A1J8.	5-36
A1J10		CONNECTOR, PLUG, ELECTRICAL: 1.10 inches long, fits 0.2 inch dia. coaxial cable, push-on type; mfr STR, P/N 5287.	5-36
A1J11		CONNECTOR: MIL type MS3102R-36-8P.	5-37

TABLE 6-1. (Continued)

REF DESIG	NOTES	NAME AND DESCRIPTION	FIG. NO.
A1MP1		WINDOW, OBSERVATION: Plexiglass, transparent, red, 8.075 inches long, 1.870 inches wide, 0.125 inch thick; mfr CMC, dwg MP4401107.	5-35
A1MP2		HOUSING, INDICATOR: 2.450 inches long, 0.75 inches wide, 0.425 inch thick, black cycolac, 5 equally spaced holes through width; mfr CMC, dwg MP3250103.	5-17
A1MP3		PUSHBUTTON: Nylon, red, 0.38 inch long, 0.250 inch dia., 0.078 inch dia. hole; mfr CMC, dwg MP3250108.	5-35
A1MP4		STOP, ELECTRICAL SWITCH: Nylon, white, 0.475 inch long, 0.375 inch wide, 0.188 inch thick, two 0.078 inch dia. holes; mfr CMC, dwg MP3250109.	5-35
A1MP5		KNOB: MIL type MS91528-1C2B.	5-35
A1MP6		KNOB: 0.700 inch dia., fits 0.127 inch dia. shaft, 1 setscrew, red, white line; mfr CMC, dwg MP4402054.	5-35
A1MP7		KNOB: 0.905 inch dia., fits 0.252 inch dia. shaft, 1 setscrew, black, white line; mfr CMC, dwg MP4402055.	5-35
A1MP8		KNOB: 0.505 inch dia., fits 0.252 inch dia. shaft, 2 setscrews, red, white dot; mfr RAY, P/N R50-1WD-1G.	5-9
A1MP9		KNOB: Same as A1MP8.	5-9
A1MP10		KNOB: 0.905 inch dia., fits 0.252 inch dia. shaft, 2 setscrews, black, white line; mfr CMC, dwg MP4402057.	5-9
A1MP11		KNOB: 1.135 inch dia., skirted, fits 0.252 inch dia. shaft, 2 setscrews, black, white numerals; mfr CMC, dwg MP4402058.	5-9
A1MP12		KNOB: Same as A1MP11.	5-9
A1MP13		KNOB: MIL type MS91528-1P2B.	5-35
A1MP14		KNOB: 0.700 inch dia., fits 0.252 inch dia. shaft, 1 setscrew, black, white line; mfr CMC, dwg MP4402062.	5-9
A1MP15		FILTER, AIR CONDITIONING AND COVER: 3.5 inches square, aluminum, louvered, with aluminum mesh element; mfr CMC, dwg MP4404187.	5-37
A1MP16		Not Used.	
A1MP17		SPRING, HELICAL, COMPRESSION: No. 24 steel wire, 8 coil, 19/32 inch long, 0.265 inch dia.; mfr CMC, dwg MP4407025.	5-33
A1MP18		SPRING: Same as A1MP17.	5-33
A1MP19		IMPELLER, FAN, AXIAL: 4 blades, 3.00 inches dia., 0.250 bore for shaft, 2 setscrews; mfr CMC, dwg MP4501059.	5-33
A1MP20		WINDOW, OBSERVATION: Plexiglass, colorless, transparent, 1.585 inches long, 0.375 inch wide, 0.06 inch thick, 5 lines of lettering; mfr CMC, dwg MP7250032.	5-17
A1MP21		Not Used.	
A1MP22		Not Used.	
A1MP23		BRACKET: Listed for reference only.	5-2
A1P1		CONNECTOR, PLUG, ELECTRICAL: Subminiature, right-angle, radio-frequency type, 75 ohm impedance; mfr SEA, P/N 50-111-0000.	5-33
A1P2		CONNECTOR, PLUG, ELECTRICAL: Subminiature, radio-frequency type, 75-ohm impedance, hermetically sealed; mfr SEA, P/N 50-107-0000.	5-33
A1P3		CONNECTOR: Same as A1A2.	5-33
A1R1		RESISTOR-SWITCH: 500 k, composition, linear taper, 2 sections; mfr CTS, P/N 90-65RV-2NB4FD504B.	5-35
A1R2-R46		Not Used.	
A1R47		RESISTOR: Same as A1A12R13.	5-33
A1R48		RESISTOR: Same as A1A12R13.	5-33
A1R49		RESISTOR: MIL type RC07GF560J.	5-34
A1S1		SWITCH, ROTARY: 3 sections, 4 positions, enclosed type; mfr GRA, P/N MS16109-36-4S(SP).	5-35
A1S2		SWITCH: Part of A1S3, not separately replaceable.	5-35
A1S3		SWITCH, ROTARY: Dual concentric type, nonshorting contacts; mfr CEN, P/N PA-022-3280.	5-35

TABLE 6-1. (Continued)

REF DESIG	NOTES	NAME AND DESCRIPTION	FIG. NO.
A1S4		SWITCH, ROTARY: 9 sections, 11 positions, nonshorting contacts; mfr CMC, dwg MP4701180.	5-35
A1S5		SWITCH, ROTARY: Part of A1R1, not separately replaceable.	5-35
A1S6		SWITCH, PUSH: Single-pole, single-throw, 1 amp at 115 vac; mfr GRA, P/N 30-1.	5-35
A1S7		Not Used.	
A1S8		Not Used.	
A1S9		SWITCH, TOGGLE: Double-pole, double-throw, center position, 2 amp at 28 vdc; mfr CUT, P/N 8867K4.	5-9
A1S10		SWITCH, TOGGLE: Single-pole, single-throw center position, 2 amp at 28 vdc; mfr CUT, P/N 8866K4.	5-9
A1S11		Not Used.	
A1S12		SWITCH: Same as A1S10.	5-9
A1S13		SWITCH: Same as A1S10.	5-37
A1T1		TRANSFORMER, POWER DISTRIBUTION 50/60/400 cps at 115 vac input, 6/28/37.5/155 vac output, solder-type terminals; mfr CMC, dwg MP5100235.	5-33
A1TB1		TERMINAL BOARD: Glass fibre, 3-1/2 inches long, 5/8 inch wide, 5/16 inch thick, 24 terminals; mfr CMC dwg MP4105026.	5-17
A1TB2		TERMINAL BOARD: Glass fibre, 3-1/2 inches long, 13/32 inch wide, 5/16 inch thick, 12 terminals; mfr CMC dwg MP4105025.	5-34
A1TB3		TERMINAL BOARD: Glass base epoxy resin, 2.190 inches long, 0.375 inch wide, 1/16 inch thick, 10 terminals; mfr CMC, dwg MP1240015.	5-34
A1XA1		SOCKET, CKT BD: MIL type M21097/1-148.	5-34
A1XA2		SOCKET, CKT BD: Same as A1XA1.	5-34
A1XA3		SOCKET, CKT BD: Same as A1XA1.	5-34
A1XA4		SOCKET, CKT BD: Same as A1XA1.	5-34
A1XA5		SOCKET, CKT BD: Same as A1XA1.	5-34
A1XA6		SOCKET, CKT BD: Same as A1XA1.	5-34
A1XA7		SOCKET, CKT BD: MIL type M21097/1-166.	5-34
A1XA8		SOCKET, CKT BD: Same as A1XA1.	5-34
A1XA9		SOCKET, CKT BD: Same as A1XA1.	5-34
A1XA10		SOCKET, CKT BD: Same as A1XA1.	5-34
A1XA11		SOCKET, CKT BD: Same as A1XA1.	5-34
A1XA12		SOCKET, CKT BD: Same as A1XA1.	5-34
A1XA13		SOCKET, CKT BD: Same as A1XA1.	5-34
A1XA14		SOCKET, CKT BD: Same as A1XA1.	5-34
A1XA15		SOCKET, CKT BD: Same as A1XA1.	5-34
A1XA16		SOCKET, CKT BD: Same as A1XA1.	5-34
A1XA17		SOCKET, CKT BD: Same as A1XA1.	5-34
A1XA18		SOCKET, CKT BD: Same as A1XA1.	5-34
A1XA19		SOCKET, CKT BD: Same as A1XA1.	5-34
A1XDS1		LAMPHOLDER-LENS: MIL type LH74LC13RT.	5-33
A1XF1		FUSEHOLDER: MIL type MI9207/26-0001.	5-35
A1XF2		FUSEHOLDER: Same as A1XF1.	5-35
A2		CONVERTER, FREQUENCY, ELECTRONIC: MIL type CV-1921/USM-207.	5-33
A2A1		FREQUENCY MULTIPLIER: Printed circuit board w/all components assembled for operation; mfr CMC, dwg MP25-527L3.	5-51
A2A1C1		CAPACITOR: Same as A1A1C3.	5-53
A2A1C2		CAPACITOR: Same as A1A1C3.	5-53
A2A1C3		CAPACITOR: Same as A1A5C2.	5-53
A2A1C4		CAPACITOR: Same as A1A5C2.	5-53

TABLE 6-1. (Continued)

REF DESIG	NOTES	NAME AND DESCRIPTION	FIG. NO.
A2A1C5		CAPACITOR: Same as A1A5C2.	5-53
A2A1C6		Not Used.	
A2A1C7		CAPACITOR: Same as A1A6C2.	5-53
A2A1C8		CAPACITOR: Same as A1A5C30.	5-53
A2A1C9		CAPACITOR: Same as A1A5C30.	5-53
A2A1C10		CAPACITOR: Same as A1A2C1.	5-53
A2A1C11		CAPACITOR: Same as A1A2C1.	5-53
A2A1C12		CAPACITOR: Same as A1A6C2.	5-53
A2A1C13		CAPACITOR: MIL type CK60AW102M.	5-53
A2A1C14		CAPACITOR: Same as A1A6C2.	5-53
A2A1C15		CAPACITOR: Same as A1A6C2.	5-53
A2A1C16		CAPACITOR: Same as A1A6C2.	5-53
A2A1C17		CAPACITOR: Same as A1A6C3.	5-53
A2A1C18		CAPACITOR: Same as A1A6C3.	5-53
A2A1C19		CAPACITOR: Same as A1A6C3.	5-53
A2A1C20		CAPACITOR: Same as A1A6C3.	5-53
A2A1C21		CAPACITOR: Same as A1A6C3.	5-53
A2A1C22		CAPACITOR: Same as A1A6C3.	5-53
A2A1C23		CAPACITOR: Same as A1A6C3.	5-53
A2A1C24		CAPACITOR: Same as A1A6C3.	5-53
A2A1CR1		SEMICONDUCTOR DEVICE, DIODE: Same as A1A5CR2.	5-53
A2A1CR2		SEMICONDUCTOR DEVICE, DIODE: Same as A1A5CR2.	5-53
A2A1L1		COIL: MIL type MS75008-38.	5-53
A2A1L2		COIL: Same as A2A1L1.	5-53
A2A1L3		COIL: Same as A1A8L1.	5-53
A2A1L4		COIL: Same as A1A8L1.	5-53
A2A1L5		COIL: Same as A1A8L1.	5-53
A2A1L6		COIL: Same as A1A8L1.	5-53
A2A1Q1		TRANSISTOR: Same as A1A5Q1.	5-53
A2A1Q2		TRANSISTOR: Same as A1A5Q1.	5-53
A2A1Q3		TRANSISTOR: Same as A1A5Q1.	5-53
A2A1Q4		TRANSISTOR: Same as A1A5Q1.	5-53
A2A1Q5		TRANSISTOR: Same as A1A5Q1.	5-53
A2A1R1		RESISTOR: Same as A1A6R30.	5-53
A2A1R2		RESISTOR: Same as A1A1R6.	5-53
A2A1R3		RESISTOR: Same as A1A1R6.	5-53
A2A1R4		Not Used.	
A2A1R5		RESISTOR: Same as A1A9R84.	5-53
A2A1R6		RESISTOR: Same as A1A9R84.	5-53
A2A1T1		TRANSFORMER, RADIO FREQUENCY: Slug-tuned type, primary 14 turns, secondary 4 turns, No. 28 wire; mfr CMC, dwg MP5101216.	5-53
A2A1T2		TRANSFORMER, RADIO FREQUENCY: Slug-tuned type, primary 5 turns, secondary 1 turn, No. 28 wire; mfr CMC, dwg MP5101217.	5-53
A2A1T3		TRANSFORMER: Same as A2A1T2.	5-53
A2A1T4		TRANSFORMER: Same as A2A1T2.	5-53
A2A1T5		TRANSFORMER: Same as A2A1T2.	5-53
A2C1		CAPACITOR: Same as A2A1C13.	5-52
A2C2		CAPACITOR, VARIABLE, AIR DIELECTRIC: 0.8 to 10 $\mu\mu$f, 250 vdcw; mfr JOH, P/N JMC2950.	5-20
A2C3		CAPACITOR: Same as A2C2.	5-20
A2C4		CAPACITOR: Same as A2C2.	5-20
A2C5		CAPACITOR: Same as A2C2.	5-20
A2C6		CAPACITOR: Same as A2C2.	5-20
A2C7		CAPACITOR: Same as A2C2.	5-20

TABLE 6-1. (Continued)

REF DESIG	NOTES	NAME AND DESCRIPTION	FIG. NO.
A2C8		CAPACITOR: Same as A1A21C11.	5-20
A2C9		CAPACITOR: Same as A2C2.	5-20
A2C10		CAPACITOR: Same as A1A6C30.	5-20
A2C11		CAPACITOR: Same as A2C2.	5-20
A2C12		CAPACITOR: Same as A1A5C4.	5-20
A2C13		CAPACITOR: Same as A2C2.	5-20
A2C14		Selected as described in paragraph 5-5w.	5-20
A2C15		CAPACITOR: Same as A1A5C5.	5-20
A2C16		CAPACITOR: MIL type CB11RD510J.	5-20
A2C17		CAPACITOR: Same as A1A5C23.	5-54
A2C18		CAPACITOR: Same as A1A5C24.	5-54
A2C19		CAPACITOR: Same as A1A5C23.	5-54
A2C20		CAPACITOR: Same as A1A6C24.	5-54
A2C21		CAPACITOR, VARIABLE, AIR DIELECTRIC: 9 to 35 $\mu\mu$f, 200 vdcw; mfr ER, P/N 538-001-94R.	5-54
A2C22		CAPACITOR: Same as A2C1.	5-54
A2C23		CAPACITOR: Same as A2C1.	5-54
A2C24		CAPACITOR: MIL type CK06CW103K.	5-52
A2C25		CAPACITOR: Same as A2C24.	5-52
A2C26		CAPACITOR: Same as A2C1.	5-54
A2C27		CAPACITOR: MIL type CB11RD330K.	5-52
A2C28		CAPACITOR: MIL type CB11RD560K.	5-52
A2C29		CAPACITOR: Same as A1A21C11.	5-52
A2C30		CAPACITOR: Same as A2C16.	5-52
A2C31		CAPACITOR: Same as A1A21C11.	5-52
A2C32		CAPACITOR: Same as A2C16.	5-52
A2C33		CAPACITOR: Same as A1A6C45.	5-52
A2C34		CAPACITOR: MIL type CB11RD300K.	5-52
A2C35		CAPACITOR: Same as A1A21C11.	5-52
A2C36 to A2C43		Not Used.	
A2C44		CAPACITOR: Same as A2C24.	5-54
A2C45		CAPACITOR: Same as A1A6C2.	5-54
A2C46		CAPACITOR, FIXED, CERAMIC: 0.1 μf ±5%; mfr ER, P/N 8133-000-W5R104K.	5-54
A2C47		CAPACITOR: Same as A2C24.	5-54
A2C48		Not Used.	
A2C49		Not Used.	
A2C50		CAPACITOR: Same as A2C46.	5-54
A2C51		CAPACITOR: Same as A1A5C30.	5-54
A2C52		CAPACITOR: Same as A2C24.	5-54
A2C53		CAPACITOR: Same as A2C24.	5-54
A2C54		CAPACITOR: Same as A2C46.	5-54
A2C55		CAPACITOR: Same as A2C46.	5-54
A2C56		CAPACITOR: Same as A1A5C30.	5-54
A2C57		CAPACITOR: Same as A2C24.	5-54
A2C58		Not Used.	
A2C59		CAPACITOR: Same as A2C46.	5-54
A2C60		CAPACITOR: Same as A2C24.	5-54
A2C61		CAPACITOR: Same as A2C24.	5-54
A2C62		CAPACITOR: Same as A1A6C18.	5-54
A2CR1 and A2CR2		SEMICONDUCTOR DEVICE, SET: Type 1N831M (matched pair); mfr CMC, dwg MP4300197.	5-52
A2CR3		SEMICONDUCTOR DEVICE, DIODE: Same as A1A5CR2.	5-52

TABLE 6-1. (Continued)

REF DESIG	NOTES	NAME AND DESCRIPTION	FIG. NO.
A2CR4 to A2CR6		Not Used.	
A2CR7		SEMICONDUCTOR DEVICE, DIODE: Same as A1A8CR11.	5-54
A2CR8		SEMICONDUCTOR DEVICE, DIODE: Same as A1A5CR2.	5-54
A2E1		BEAD, FERRITE: Same as A1A8E5.	5-54
A2E2		BEAD, FERRITE: Same as A1A8E5.	5-54
A2E3		BEAD, FERRITE: Same as A1A8E5.	5-54
A2E4		BEAD, FERRITE: Same as A1A8E5.	5-54
A2E5		CONTACT ASSEMBLY: Goldplated, 38 contact fingers, 0.907 inch outside dia., 17/32 inch wide; mfr CMC, dwg MP1250568.	5-19
A2E6		TERMINAL, STUD: MIL type MIL-T-55155/16-1.	5-52
A2E7		TERMINAL, STUD: Same as A2E6.	5-52
A2E8		TERMINAL, STUD: Same as A2E6.	5-52
A2E9		TERMINAL, STUD: Same as A2E6.	5-52
A2E10		TERMINAL, STUD: Same as A2E6.	5-52
A2E11		TERMINAL, STUD: Brass, 0.58 inch long, 4–40 thread; mfr USE, P/N 1480D.	5-52
A2J1		CONNECTOR, RECEPTACLE, ELECTRICAL: Same as A1J2.	5-52
A2L1		COIL, RADIO FREQUENCY: 4 turns No. 22 AWG wire, air core, 0.218 inch inside dia; mfr CMC, dwg MP5101252.	5-52
A2L2		COIL, RADIO FREQUENCY: 4-1/2 turns No. 26 AWG wire on slug-type core; mfr CMC, dwg MP5101247.	5-54
A2L3		COIL, RADIO FREQUENCY: Same as A1A9L2.	5-52
A2L4		COIL: Same as A1A9L2.	5-52
A2L5		COIL: Same as A1A9L2.	5-52
A2L6		COIL: Same as A1A9L2.	5-52
A2L7 to A2L18		Not Used.	
A2L19		COIL, RADIO FREQUENCY: MIL type LT4K03.	5-54
A2L20		COIL: Same as A2L19.	5-54
A2L21 to A2L24		Not Used.	
A2L25		COIL, RADIO FREQUENCY: MIL type LT4K032.	5-52
A2M1		AMMETER: 0 to 500 μadc, round, 1 inch dia., mfr DEJ, P/N 1 inch 100 series 500 μa.	5-52
A2MP1		GEAR BEVEL: 16 teeth, 0.500 inch pitch dia., 32 pitch, two 6-32 countersunk holes on shaft; mfr CMC, dwg MP1250550.	5-19
A2MP2		COVER, HARMONIC GENERATOR: Listed for reference only.	5-52
A2MP3		ARM, DETENT: 0.781 inch long, 0.375 inch wide, 0.105 inch thick, with 0.0937 inch dia. pin at end; mfr CMC, dwg MP1250621.	5-19
A2MP4		LEVER, REMOTE CONTROL: 1-5/16 inch long, pivoted end, center roller; mfr CMC, dwg MP1250670.	5-19
A2MP5		Not Used.	
A2MP6		THUMBSCREW: Stainless steel, 1.60 inch long, knurled head, 10-32 thread; mfr CMC, dwg MP3250115.	5-19
A2MP7		KNOB: MIL type MS91528-1A2B.	5-22
A2MP8		Not Used.	
A2MP9		DETENT, SWITCH–SHAFT STRAIGHT: 4.489 inches overall length, detent assembly 1-1/8 inches by 1-5/16 inches; mfr CMC, dwg MP4404228.	5-19
A2MP10		WASHER, NON-METALLIC: Nylon, 0.250 inch outside dia., 0.125 inch inside dia., 0.020 inch thick; mfr CMC, dwg MP4404204.	5-19
A2MP11		WASHER, NON-METALLIC: Same as A2MP10.	5-19
A2MP12		WASHER, NON-METALLIC: Same as A2MP10.	5-19
A2MP13		WASHER, NON-METALLIC: Same as A2MP10.	5-19

TABLE 6-1. (Continued)

REF DESIG	NOTES	NAME AND DESCRIPTION	FIG. NO.
A2MP14		SPACER, SLEEVE: Ceramic, 0.312 inch long, 0.188 inch outside dia., 0.117 inch inside dia.; mfr CEN, P/N P-330.	5-19
A2MP15		SPACER, SLEEVE: Same as A2MP14.	5-19
A2MP16		SCREW, MACHINE: Nylon, 1.0 inch long, 4-40 thread; mfr WEC, P/N N-440-1.	5-19
A2MP17		SCREW, MACHINE: Same as A2MP16.	5-19
A2MP18		Not Used.	
A2MP19		Not Used.	
A2MP20		CASTING, CAVITY: Listed for reference only.	5-19
A2MP21		COVER, CAVITY: Listed for reference only.	5-19
A2MP22		GEARSHAFT, BEVEL: Nylon, 16 teeth, 32 pitch, 1.40 inches long; mfr CMC, dwg MP9250058.	5-19
A2MP23		SPACER, SLEEVE: Brass, 0.156 inch long, 3/16 inch outside dia., 0.117 inch inside dia.; mfr CMC, dwg MP3250105.	5-19
A2MP24		SPACER, SLEEVE: Same as A2MP23.	5-19
A2MP25		SPACER, SLEEVE: Same as A2MP23.	5-19
A2MP26		SPACER, SLEEVE: Same as A2MP23.	5-19
A2MP27		SPRING, HELICAL, EXTENSION: Stainless steel; mfr CTS, P/N 002.	5-19
A2MP28		WASHER, KEY: Steel, 0.380 inch outside dia., 0.250 inch inside dia.; mfr MIC, P/N PB-10511.	5-22
A2MP29		WASHER, KEY: Same as A2MP28.	5-22
A2MP30		WASHER, KEY: Same as A2MP28.	5-22
A2MP31		TERMINAL, LUG: Brass, 0.60 inch long, 0.31 inch dia., mfr CMC, dwg MP1250782.	5-19
A2MP32		TERMINAL, LUG: Same as A2MP31.	5-19
A2MP33		TERMINAL, LUG: Same as A2MP31.	5-19
A2MP34		BRACKET: Listed for reference only.	5-22
A2MP35		PLATE: Listed for reference only.	5-18
A2MP36		PLATE: Listed for reference only.	5-18
A2P1		CONNECTOR, PLUG, ELECTRICAL: Push-on type, 1.00 inch long, 15/32 inch dia., fits coaxial cable; mfr STR, P/N 5088.	5-51
A2P2		CONNECTOR, RECEPTACLE, ELECTRICAL: 15 solder cup contacts for No. 20 AWG wire, molded body; mfr ATL, P/N MP15P-20-SPMP-GDF.	5-51
A2Q1, A2Q2		Not Used.	
A2Q3		TRANSISTOR: Same as A1A8Q13.	5-54
A2Q4		TRANSISTOR: Same as A1A8Q13.	5-54
A2Q5		TRANSISTOR: Same as A1A8Q13.	5-54
A2Q6		TRANSISTOR: Same as A1A8Q13.	5-54
A2Q7		TRANSISTOR: Same as A1A5Q1.	5-54
A2R1		RESISTOR: MIL type RL42AD620J.	5-52
A2R2		RESISTOR: MIL type RL07AD241J.	5-52
A2R3		RESISTOR: MIL type RL07AD620J.	5-52
A2R4		RESISTOR: Same as A2R3.	5-52
A2R5		RESISTOR: Same as A2R2.	5-52
A2R6		RESISTOR: Same as A2R3.	5-52
A2R7		RESISTOR: MIL type RC07GF680J.	5-20
A2R8		RESISTOR: Same as A1A8R30.	5-54
A2R9		RESISTOR: Same as A1A8R34.	5-54
A2R10		RESISTOR: Same as A1A2R1.	5-54
A2R11		RESISTOR: Same as A1A2R1.	5-54
A2R12		RESISTOR: Same as A1A11R7.	5-54
A2R13		RESISTOR: Same as A1A2R1.	5-54
A2R14		RESISTOR: Same as A1A8R30.	5-52
A2R15		RESISTOR: Same as A1A2R1.	5-54
A2R16		RESISTOR: Same as A1A11R7.	5-52
A2R17		RESISTOR: Same as A1R49.	5-52
A2R18		Not Used.	
A2R19		RESISTOR: Same as A1A2R45.	5-54
A2R20		RESISTOR: Same as A1A2R4.	5-54

TABLE 6-1. (Continued)

REF DESIG	NOTES	NAME AND DESCRIPTION	FIG. NO.
A2R21		RESISTOR: Same as A1A1R7.	5-54
A2R22		RESISTOR: Same as A1A5R43.	5-54
A2R23		RESISTOR: Same as A1A9R29.	5-54
A2R24 to A2R27		Not Used.	
A2R28		RESISTOR: Same as A1A2R4.	5-54
A2R29		RESISTOR: Same as A1A2R45.	5-54
A2R30		RESISTOR: Same as A1A1R7.	5-54
A2R31		RESISTOR: Same as A1A5R43.	5-54
A2R32		RESISTOR: Same as A1A9R29.	5-54
A2R33		RESISTOR: Same as A1A2R45.	5-54
A2R34		RESISTOR: Same as A1A2R4.	5-54
A2R35		RESISTOR: Same as A1A1R7.	5-54
A2R36		RESISTOR: Same as A2R7.	5-54
A2R37		RESISTOR: Same as A1A9R29.	5-54
A2R38		RESISTOR: Same as A1A11R7.	5-54
A2R39		RESISTOR: Same as A1A1R14.	5-54
A2R40		RESISTOR: Same as A1A2R1.	5-54
A2R41		RESISTOR: Same as A1A9R40.	5-54
A2R42		RESISTOR: Same as A1A8R30.	5-19
A2R43		RESISTOR: Same as A1A2R1.	5-54
A2R44		Not Used.	
A2R45		Not Used.	
A2R46		RESISTOR: MIL type RVLAYSA251A.	5-51
A2S1		SWITCH, TOGGLE: Double-pole, double-throw, 1 amp at 28 vdc, miniature; mfr WEL, P/N 2TM1-T.	5-52
A2S2		SWITCH: Same as A2S1.	5-52
A2S3		SWITCH: Same as A2S1.	5-52
A2S4		SWITCH, ROTARY: 1 deck, shorting contacts; mfr CMC, dwg MP4701195.	5-19
A2T1		TRANSFORMER, RADIO-FREQUENCY: Copper wire square, coupling loop type; mfr CMC, dwg MP1250733.	5-20
A2TB1		TERMINAL BOARD: Glass epoxy, 1.12 inches long, 0.500 inch wide; mfr CMC, dwg MP1240014.	5-52
A2XA1		SOCKET, CKT BD: MIL type M21097/1-109.	5-51
A3		OSCILLATOR, RADIO FREQUENCY: MIL type O-1267/USM-207.	5-53
A3C1		CAPACITOR: Same as A1C3.	5-55
A3C2		CAPACITOR: Same as A1A6C33.	5-57
A3C3		CAPACITOR: Same as A1A1C7.	5-57
A3C4		CAPACITOR: Same as A1A1C2.	5-57
A3C5		CAPACITOR: Same as A1A5C23.	5-57
A3C6		CAPACITOR: Same as A1A1C2.	5-57
A3C7		CAPACITOR: Same as A1A1C2.	5-57
A3C8		CAPACITOR: Same as A1A5C27.	5-57
A3C9		CAPACITOR: Same as A1A6C33.	5-57
A3CR1		SEMICONDUCTOR DEVICE, DIODE: Same as A1A1CR5.	5-57
A3CR2		SEMICONDUCTOR DEVICE, DIODE: Same as A1A1CR5.	5-57
A3CR3		SEMICONDUCTOR DEVICE, DIODE: Same as A1A1CR5.	5-57
A3CR4		SEMICONDUCTOR DEVICE, DIODE: Same as A1A1CR5.	5-57
A3CR5		SEMICONDUCTOR DEVICE, DIODE: Same as A1A1CR5.	5-57
A3CR6		SEMICONDUCTOR DEVICE, DIODE: Same as A1A1CR14.	5-57
A3CR7		SEMICONDUCTOR DEVICE, DIODE: Same as A1A1CR14.	5-57
A3E1		TERMINAL, STUD, TP1: Same as A1A1E1.	5-57
A3E2		TERMINAL, STUD, TP2: Same as A1A1E1.	5-57
A3E3		TERMINAL, STUD: Same as A1A9E6.	5-57
A3J1		Not Used.	
A3J2		CONNECTOR, RECEPTACLE, ELECTRICAL: Same as A1J1.	5-56
A3MP1		THUMBSCREW: Same as A2MP6.	5-55

TABLE 6-1. (Continued)

REF DESIG	NOTES	NAME AND DESCRIPTION	FIG. NO.
A3P1		CONNECTOR, RECEPTACLE, ELECTRICAL: Same as A2P2.	5-56
A3Q1		TRANSISTOR: Same as A1A1Q1.	5-56
A3Q2		TRANSISTOR: Same as A1A7Q11.	5-57
A3Q3		TRANSISTOR: Same as A1A5Q1.	5-57
A3Q4		TRANSISTOR: Same as A1A5Q1.	5-57
A3R1		RESISTOR: MIL type RW67V1R5.	5-57
A3R2		RESISTOR: Same as A1A5R43.	5-57
A3R3		RESISTOR: Same as A1A8R39.	5-57
A3R4		RESISTOR: Same as A1A8R37.	5-57
A3R5		RESISTOR: MIL type RL42AD221J.	5-57
A3R6		RESISTOR: Same as A1A5R44.	5-57
A3R7		RESISTOR: MIL type RL20AD561J.	5-57
A3R8		RESISTOR: MIL type RL20AD681J.	5-57
A3R9		RESISTOR: Same as A1A7R9.	5-57
A3R10		RESISTOR: Same as A1A2R45.	5-57
A3R11		RESISTOR: Same as A1A9R10.	5-57
A3R12		RESISTOR: Same as A1A9R10.	5-57
A3R13		RESISTOR: Same as A1A1R6.	5-57
A3R14		RESISTOR: Same as A1A2R45.	5-57
A3R15		RESISTOR: Same as A1A2R3.	5-57
A3R16		RESISTOR: Same as A1A1R6.	5-57
A3R17		RESISTOR: Same as A1A8R34	5-57
A3T1		TRANSFORMER, POWER DISTRIBUTION: 115 vrms, 50 to 400 cps input, 30 vrms, 0.4 amp output; mfr CMC, dwg MP5100236.	5-56
A3T2		TRANSFORMER, RADIO FREQUENCY: Operating frequency 1 megacycle, slug-tuned type, primary 90 turns, secondary 15 turns No. 28 wire; mfr CMC, dwg MP5101214.	5-57
A3Y1		OSCILLATOR, RADIO FREQUENCY: 1-mc output, self-contained can 4.45 inches long, 2.50 inches square, stability 1 part in 10^9 for 1000 second period; mfr CMC, dwg MP4200014.	5-56
A3Y1C1		CAPACITOR: Same as A1A7C1.	5-58
A3Y1C2		CAPACITOR, VARIABLE: 1.0 to 28.0 $\mu\mu$fd, 500 vdcw, trimmer type; mfr JFD, P/N VQJ1909.	5-26
A3Y1C3		CAPACITOR: Same as A3Y1C2.	5-26
A3Y1C4		Selected as described in par. 5-5aj.	5-58
A3Y1C5		CAPACITOR, FIXED, MICA: 470 $\mu\mu$fd ±10%, 300 vdcw; mfr ARC, P/N SCDM15-470.	5-58
A3Y1C6		CAPACITOR, FIXED, CERAMIC: 0.01 μfd ±20%, 200 vdcw; mfr KNG, P/N K160CW103M.	5-58
A3Y1C7		CAPACITOR, FIXED, MICA: 330 $\mu\mu$fd ±5%, 100 vdcw; mfr ARC, P/N SCDM10-330.	5-58
A3Y1C8		CAPACITOR, FIXED, MICA: 100 $\mu\mu$fd ±5%, 500 vdcw; mfr ARC, P/N SCDM10-100.	5-58
A3Y1C9		CAPACITOR: Same as A3Y1C8.	5-58
A3Y1C10		CAPACITOR: Same as A3Y1C6.	5-58
A3Y1C11		CAPACITOR: Same as A1A7C1.	5-58
A3Y1C12		CAPACITOR, FIXED, MICA: 5 $\mu\mu$fd ±5%, 500 vdcw; mfr ARC, P/N SCDM10-5.	5-26
A3Y1CR1		SEMICONDUCTOR DEVICE, DIODE: MIL type 1N963B.	5-58
A3Y1CR2		SEMICONDUCTOR DEVICE, DIODE: MIL type 1N645.	5-58
A3Y1CR3		SEMICONDUCTOR DEVICE, DIODE: MIL type 1N968B.	5-58
A3Y1CR4		SEMICONDUCTOR DEVICE, DIODE: Same as A3Y1CR2.	5-27
A3Y1CR5		SEMICONDUCTOR DEVICE, DIODE: Same as A3Y1CR2.	5-27
A3Y1CR6		SEMICONDUCTOR DEVICE, DIODE: Same as A3Y1CR2.	5-27
A3Y1CR7		SEMICONDUCTOR DEVICE, DIODE: Same as A3Y1CR2.	5-27
A3Y1CR8		SEMICONDUCTOR DEVICE, DIODE: Same as A1A1CR5.	5-27
A3Y1E1		PRINTED CIRCUIT BOARD: 1.765 inches square, 1/16 inch thick, copper plated fiberboard; mfr OVN, P/N PCB-1004-1.	5-58

TABLE 6-1. (Continued)

REF DESIG	NOTES	NAME AND DESCRIPTION	FIG. NO.
A3Y1E2		TERMINAL, FEEDTHROUGH, INSULATED: Brass, 0.333 inch overall length, 0.205 inch largest dia. ; mfr SEA, P/N FT-SM-765L.	5-26
A3Y1E3		TERMINAL, FEEDTHROUGH, INSULATED: Same as A3Y1E2.	5-26
A3Y1E4		TERMINAL, STUD: Brass single-end, single-turret type, 0.262 inch overall length, 0.172 inch largest dia. ; mfr SEA, P/N ST-SM-50-TUR.	5-27
A3Y1E5		TERMINAL, STUD: Same as A3Y1E4.	5-27
A3Y1E6		TERMINAL, STUD: Same as A3Y1E4.	5-27
A3Y1E7		TERMINAL, STUD: Same as A3Y1E4.	5-27
A3Y1E8		TERMINAL, STUD: Same as A3Y1E4.	5-27
A3Y1E9		TERMINAL, STUD: Same as A3Y1E4.	5-27
A3Y1E10		TERMINAL, STUD: Same as A3Y1E4.	5-27
A3Y1E11		TERMINAL, STUD: Same as A3Y1E4.	5-27
A3Y1E12		TERMINAL, STUD: Same as A3Y1E4.	5-27
A3Y1E13		TERMINAL, STUD: Same as A3Y1E4.	5-27
A3Y1E14		TERMINAL, STUD: Same as A3Y1E4.	5-27
A3Y1E15		TERMINAL, STUD: Same as A3Y1E4.	5-27
A3Y1E16		TERMINAL, STUD: Same as A3Y1E4.	5-27
A3Y1E17		TERMINAL, STUD: Same as A3Y1E4.	5-27
A3Y1E18		TERMINAL, STUD: Single-end, single-turret type; mfr SEA, P/N ST-SM1-TUR.	5-27
A3Y1E19		TERMINAL, FEEDTHROUGH, INSULATED: Same as A3Y1E2.	5-24
A3Y1E20		TERMINAL, FEEDTHROUGH, INSULATED: Same as A3Y1E2.	5-24
A3Y1E21		TERMINAL, FEEDTHROUGH, INSULATED: Same as A3Y1E2.	5-24
A3Y1MP1		Not Used.	
A3Y1MP2		INSULATOR, DISK: Nylon, 0.200 inch dia., 0.060 inch thick, four holes; mfr THE, P/N 7717-46NW.	5-58
A3Y1MP3		INSULATOR, DISK: Same as A3Y1MP2.	5-58
A3Y1MP4		INSULATOR, DISK: Same as A3Y1MP2.	5-58
A3Y1MP5		INSULATOR, DISK: Same as A3Y1MP2.	5-58
A3Y1MP6		PANEL: 1.765 inches square, rounded corners, five tapped holes, five clearance holes; mfr OVN, P/N 1020.	5-26
A3Y1MP7		SHIELD: Copper, 1.270 inches dia. in closed position, three mounting holes; mfr OVN, P/N 981.	5-26
A3Y1MP8		MOUNT, RESILIENT: Polyurethane foam, 3-1/2 inches long, 1-3/4 inches wide, 3/8 inch thick; mfr OVN, P/N 982.	5-26
A3Y1MP9		COUPLING, SHAFT, RIGID: Steel tab, 0.200 inch long, 0.093 inch wide, 0.027 inch thick; mfr OVN, P/N 977.	5-26
A3Y1MP10		COUPLING, SHAFT, RIGID: Same as A3Y1MP9.	5-26
A3Y1MP11		HOLDER, THERMISTOR: Steel, adjustable, clip-type, 27/32 inch long, 0.215 inch wide; mfr OVN, P/N 988.	5-27
A3Y1MP12		BRACKET: Copper, 0.900 inch long, 1/4 inch wide, 1/32 inch thick, one tapped hole at each end; mfr OVN, P/N 1174-1.	5-27
A3Y1MP13		INSULATOR, DISK: Same as A3Y1MP2.	5-27
A3Y1MP14		INSULATOR, DISK: Same as A3Y1MP2.	5-27
A3Y1MP15		INSULATOR, DISK: Same as A3Y1MP2.	5-27
A3Y1MP16		INSERT, INSULATED: Glass, cylindrical type, outside dia. 0.232 inch, inside dia. 0.197 inch, 0.262 inch flange; mfr OVN, P/N 1154.	5-27
A3Y1MP17		INSERT, INSULATED: Same as A3Y1MP16.	5-27
A3Y1MP18		INSERT, INSULATED: Same as A3Y1MP16.	5-27
A3Y1MP19		COVER, TOP: Aluminum, 2.250 inches square, 1/4 inch thick, 6 holes around edge; mfr OVN, P/N 935.	5-24
A3Y1MP20		INSULATION, BATT: Fiberglass, 8-3/4 inches long, 3-7/8 inches wide, 3/8 inch thick, two clearance holes; mfc OVN, P/N 990.	5-24
A3Y1MP21		SCREW-SHAFT: Delrin, 1.191 inch length, 0.250 inch dia. ; mfr OVN, P/N 976.	5-25

TABLE 6-1. (Continued)

REF DESIG	NOTES	NAME AND DESCRIPTION	FIG. NO.
A3Y1MP22		SCREW-SHAFT: Same as A3Y1MP21.	5-25
A3Y1MP23		COVER, XTAL OVEN: Copper, 1.875 inches square, 1/4 inch wide, flanged; mfr OVN, P/N 689.	5-25
A3Y1MP24		SLEEVE, COUPLER: Teflon, 5/8 inch long, 0.249 inch outside dia., 0.229 inside dia.; mfr OVN, P/N 984.	5-25
A3Y1MP25		SLEEVE, COUPLER: Same as A3Y1MP24.	5-25
A3Y1MP26		COVER, BOTTOM: Aluminum, 2.250 inches square, 1/4 inch thick, 8 holes in face, 5 holes around edge; mfr OVN, P/N 934.	5-25
A3Y1Q1		TRANSISTOR: Same as A1A5Q1.	5-28
A3Y1Q2		TRANSISTOR: Same as A1A5Q1.	5-28
A3Y1Q3		TRANSISTOR: Same as A1A5Q1.	5-28
A3Y1Q4		TRANSISTOR: Same as A1A5Q1.	5-28
A3Y1Q5		TRANSISTOR: Same as A1A5Q1.	5-27
A3Y1Q6		TRANSISTOR: Same as A1A5Q1.	5-27
A3Y1Q7		TRANSISTOR: MIL type 2N759A.	5-27
A3Y1Q8		TRANSISTOR: MIL type 2N1485.	5-27
A3Y1R1		Selected as described in par. 5-5ak.	5-58
A3Y1R2		RESISTOR: MIL type RL07S683G.	5-58
A3Y1R3		RESISTOR: MIL type RL07S102G.	5-58
A3Y1R4		RESISTOR: MIL type RC07GF102K.	5-58
A3Y1R5		RESISTOR: MIL type RC07GF683K.	5-58
A3Y1R6		RESISTOR: MIL type RC07GF101K.	5-58
A3Y1R7		RESISTOR: MIL type RC07GF102K.	5-58
A3Y1R8		RESISTOR: MIL type RL07S153G.	5-58
A3Y1R9		RESISTOR: MIL type RL07S104G.	5-58
A3Y1R10		RESISTOR: MIL type RL07S103G.	5-58
A3Y1R11		RESISTOR: MIL type RC07GF470K.	5-58
A3Y1R12		RESISTOR: MIL type RC07GF182K.	5-58
A3Y1R13		Not Used.	
A3Y1R14		Not Used.	
A3Y1R15		RESISTOR, THERMAL: Glass envelope, 8.16 k ±15% at 90°C, 100 k ±15% at 25°C; mfr OVN, P/N T/M-1.	5-27
A3Y1R16		RESISTOR: MIL type RL07S102G.	5-27
A3Y1R17		RESISTOR: MIL type RL07S103G.	5-27
A3Y1R18		RESISTOR: MIL type RL07S561G.	5-27
A3Y1R19		HEATING ELEMENT: 7.7 ohms/ft, copper-nickel; mfr OVN, P/N 932.	5-27
A3Y1R20		RESISTOR, FIXED, FILM: Same as A3Y1R10.	5-27
A3Y1R21		RESISTOR, VARIABLE: 10 k, miniature type, adjusting screw control; mfr BOU, P/N 236L-1-103.	5-27
A3Y1Y1		XTAL UNIT, QUARTZ: 1-mc frequency ±0.0005%, glass case; mfr OVN, P/N XT-17-TC.	5-26
PARTS SUPPLIED WITH COVER, COUNTER CW-801/USM-207			
E1		EXTENDER, PRINTED CIRCUIT BOARD: Mfr CMC, dwg MP06-515L2.	1-1
MP1		EXTRACTOR, CIRCUIT BOARD: Stainless steel, 1/8 inch dia. rod, u-shaped; mfr CMC, dwg MP1250587.	1-1

TABLE 6-1. (Continued)

REF DESIG	NOTES	NAME AND DESCRIPTION	FIG. NO.
P1		ADAPTER, CONNECTOR: MIL type UG-255/U.	1-1
P2		ADAPTER: Same as P1.	1-1
P3		ADAPTER, CONNECTOR: MIL type UG-273/U.	1-1
P4		ADAPTER: Same as P3.	1-1
P5		ADAPTER, CONNECTOR: MIL type UG-1035/U.	1-1
P6		ADAPTER: Same as P5.	1-1
P7		ADAPTER: MIL type UG274B/U.	1-1
P8		ADAPTER: Same as P7.	1-1
W1		CABLE ASSEMBLY, POWER: 8 ft, 0 inch ±3 inches from plug to plug, power plug, 3-pin connector with coupling nut; mfr CMC, dwg MP1330065.	1-1
W1P1		CONNECTOR, PLUG: MIL type MS3106E-14S-7S.	1-1
W1P2		CONNECTOR, PLUG: MIL type UP-131M.	1-1
W2		CABLE ASSEMBLY, RADIO FREQUENCY: 13 inches ±1/2 inch from plug to plug, BNC connector type UG-88E/U, push-on panel connector; mfr CMC, dwg MP1350003.	1-1
W2P1		CONNECTOR, PLUG: MIL type UG-88E/U.	1-1
W2P2		CONNECTPR: Same as A1J10.	1-1
W3		CABLE ASSEMBLY, RADIO FREQUENCY: 13-1/2 + 1-1/2/-0 inches long, 17-contact hooded female plug, 17-contact hooded male plug; mfr CMC, dwg MP1330068.	1-1
W3P1		CONNECTOR: Same as A1J8.	1-1
W3P2		CONNECTOR: Same as A2P2.	1-1
W4		CABLE ASSEMBLY, RADIO FREQUENCY: 8 ft ±2 inches long, two BNC connectors, type UG-88E/U; mfr CMC, dwg MP1330070.	1-1
W4P1		CONNECTOR: Same as W2P1.	1-1
W4P2		CONNECTOR: Same as W2P1.	1-1
W5		CABLE ASSEMBLY: Same as W4.	1-1
W5P1		CONNECTOR: Same as W2P1.	1-1
W5P2		CONNECTOR: Same as W2P1.	1-1

TABLE 6-2. LIST OF MANUFACTURERS

MFR CODE	NAME	ADDRESS
ARC	Arco Electronics, Inc.	Great Neck, N. Y.
ATL	Atlas Connectors Co., Inc.	North Arlington, N. J.
BLE	Bliney Electric Co., Inc.	Erie, Pa.
BLI	Blinn Delbert Co.	Pomona, Calif.
BOU	Bourns Laboratories, Inc.	Riverside, Calif.
BUR	Burroughs Corp., Electronic Tube Div.	Plainfield, N. J.
CEN	Centralab, Div. of Globe-Union, Inc.	Milwaukee, Wis.
CMC	Computer Measurements Co.	San Fernando, Calif.
COR	Corning Glass Works Electronic Components Dept.	Raleigh, N. C.
CTS	Chicago Telephone of California, Inc.	South Pasadena, Calif.
CUT	Cutler-Hammer, Inc.	Los Angeles, Calif.
DEJ	DeJur Amsco Corp.	Long Island City, N. Y.
DEL	Delevan Electronics Corp.	East Aurora, N. Y.
ER	Erie Resistor Corp.	Erie, Pa.
FER	Ferroxcube Corp. of America	Saugerties, N. Y.
GE	General Electric Co., Miniature Lamp Dept.	Cleveland, Ohio
GRA	Grayhill, Inc.	LaGrange, Ill.
HHS	Herman H. Smith, Inc.	Brooklyn, N. Y. 83330
JFD	JFD Electronics Corp.	Brooklyn, N. Y.
JOH	Johanson Mfg. Co.	Boonton, N. J.
KNG	King Electronics, Inc.	South Pasadena, Calif.
MIC	Micro Switch Div., Minneapolis-Honeywell Reg. Co.	Freeport, Ill.
OAK	Oak Mfg. Corp.	Chicago, Ill.
OVN	Ovenaire, Inc.	Charlottesville, Va.
RAY	Raytheon Mfg. Corp.	Waltham, Mass.
ROA	Roanwell Corp.	New York, N. Y.
SAN	San Fernando Electric Mfg. Co.	San Fernando, Calif.
SEA	Sealectro Corp.	Mamaroneck, N. Y.
SN	Sangamo Electric Co., Pickens Div.	Pickens, S. C.
STR	Startronics, Inc.	Georgetown, Mass.
THE	Thermolloy Co.	Dallas, Texas
USE	U. S. Engineering Co.	Los Angeles, Calif.
VIC	Victory Engineering Co.	Union, N. J.
WEC	Weckesser Co.	Chicago, Ill.
WEL	Honeywell Controls, Ltd., Micro-Switch and Transistor Div.	Leaside, Ont., Canada
XOV	Aerovox Corp.	Myrtle Beach, S. C.

INDEX

Paragraph (Figure) *Table

A

A amplifier:
- functional and servicing block diagram . . . . (4-6)
- functional description 4-2d, 4-6a
- reference standard procedure *5-8
- schematic diagram . . . . . (5-63)
- trouble shooting 4-6b, *4-6

Access:
- to attenuator assemblies and parts 5-5g
- to cavity parts 5-5t
- to converter parts 5-5r
- to 1-mc oscillator A3Y1 parts and test points 5-5ad
- to rf oscillator A3 parts 5-5aa

Adapters and tee connectors 2-5c

Adjustment:
- frequency multiplier A2A1 . . . . . (5-5)
- general 5-4
- harmonic generator and cavity . . . . 5-4k(5), (5-6)
- mixer balancing . . . . . 5-4k(6)

Adjustments and test points:
- converter . . . . . (5-4)
- location . . . . . (5-2)

Af-rf amplifier A1A11:
- location of parts . . . . . (5-46)
- tuning and adjustment 5-4h

Af-rf amplifier A1A20:
- location of parts . . . . . (5-50)
- replacement 5-5h

Air circulation 2-4

Air filter:
- cleaning of 3-9, 3-11
- service 5-2a

Amplifier-electronic gate A1A8:
- location of parts . . . . . (5-43)
- tuning and adjustment 5-4f

Annunciator block, exploded view . . . . . (5-17)

Annunciator lamp illumination *4-16

Annunciator lamps, replacement 5-5p

Attenuator assemblies and parts, access 5-5g

B

B amplifier:
- functional and servicing block diagram . . . . (4-8)
- function description 4-2e, 4-7a
- reference standard procedure *5-9
- schematic diagram . . . . . (5-64)
- trigger point waveforms . . . . . (4-7)
- trouble shooting *4-7, 4-76

Block diagram:
- functional and servicing, A amplifier . . . . . (4-6)
- functional and servicing, B amplifier . . . . . (4-8)
- functional and servicing, C amplifier . . . . . (4-9)
- functional and servicing, count control . . . (4-17)
- functional and servicing, converter . . . . . (4-5)
- functional and servicing, count decade . . . (4-24)
- functional and servicing, gate control . . . . (4-16)
- functional and servicing, multiplier, 10 mc and 1 mc . . . . . (4-10)
- functional and servicing, power supply . . . (4-30)
- functional and servicing, readout . . . . . (4-29)
- functional and servicing, radio frequency oscillator . . . . . (4-4)
- functional and servicing, scaler . . . . . (4-15)
- functional, cycle control . . . . . (4-19)
- overall functional . . . . . (4-1)
- overall logic . . . . . (4-3)
- overall servicing . . . . . (4-2)
- servicing 4-2c

C

Cable assemblies 2-5

Cable assemblies, installation 2-5

Calibration of converter level meter A2M1 . . . . . 5-4k(7), (5-7)

C amplifier:
- functional and servicing block diagram . . . . (4-9)
- functional description 4-2f, 4-8a
- reference standard procedure *5-9
- schematic diagram . . . . . (5-65)
- trouble shooting 4-8b, *4-8

Cavity, converter:
- access to parts in 5-5t
- exploded view of . . . . . (5-19)
- tuning and adjustment . . . . . 5-4k(5)
- selection of capacitor A2C14 . . . . . 5-5w, (5-23)

Changes, factory 1-7

Channel A variable attenuator A1A21:
- location of parts . . . . . (5-10)
- replacement 5-5i

Channel B ac connector description . . . . (3-1), *3-2

Channel B dc connector description . . . . (3-1), *3-2

Channel B multiplier control description . . . . . (3-1), *3-2

Channel B slope control description . . . . (3-1), *3-2

Channel B trigger volts control description . . . . . (3-1), *3-2

Channel B variable attenuator A1A22:
- location of parts . . . . . (5-11)
- replacement 5-5j

Channel C ac connector description . . . . (3-1), *3-2

Channel C dc connector description . . . . (3-1), *3-2

Channel C multiplier control description . . . . . (3-1), *3-2

Channel C slope control description . . . . (3-1), *3-2

Channel C trigger volts control description . . . . . (3-1), *3-2

Channel C variable attenuator A1A23:
- location of parts . . . . . (5-12)
- replacement 5-5k

Checks and adjustment, operator 3-10

Connections to printer connector *2-1

Controls, panel:
- channel B multiplier description . . . . (3-1), *3-2
- channel B slope description . . . . . (3-1), *3-2
- channel B trigger volts description . . . (3-1), *3-2
- channel C multiplier description . . . . (3-1), *3-2
- channel C slope description . . . . . (3-1), *3-2
- channel C trigger volts description . . . (3-1), *3-2

INDEX (Continued)

	Paragraph (Figure) *Table
converter attenuators description	(3-1), *3-2
display description	(3-1), *3-2
functional description	(3-1), *3-2
mixing frequency selector description	(3-1), *3-2
mode selector description	(3-1), *3-2
power description	(3-1), *3-2
pushbutton and bar description	(3-1), *3-2
reference freq description	(3-2), *3-2
Controls, panel:	
reset description	(3-1), *3-2
sensitivity description	(3-1), *3-2
time-base description	(3-1), *3-2
Controls and connectors description, operational	*3-2
Converter, A2:	
access to parts	5-5r
adjustments and test point locations	(5-4)
exploded view	(5-18)
frequency response curve	(5-12)
front section, disassembled view	(5-22)
functional and servicing block diagram	(4-5)
functional description	4-2c, 4-5a
rear view, location of parts	(5-51)
reassembly procedure	5-5z
reference standard procedure	*5-12
schematic diagram	(5-61)
selection of A2C14	(5-23)
top view, location of parts	(5-52)
trouble shooting	4-5b
tuning and adjustment	5-4k
Converter attenuator controls description	(3-1), *3-2
Converter bandpass filter coil adjustment	(5-29)
Converter bandpass filter response curve	(5-28)
Converter cavity, exploded view	(5-19)
Converter description, general	1-3c
Converter input connector description	(3-1), *3-2
Converter level meter A2M1 calibration	(5-7)
Count control:	
functional and servicing block diagram	(4-17)
functional description	4-2j, 4-12a
reference standard procedure	*5-11
schematic diagram	(5-69)
trouble shooting	4-12b, *4-12
Count decades:	
frequency divider, schematic diagram	(5-74), (5-75)
frequency divider A1A9, schematic diagram	(5-72)
functional and servicing block	(4-24)
functional description	4-21, 4-14a
inverter, schematic diagram	(5-73)
printer connector, schematic diagram	(5-76)
reference standard procedures	*5-6
trouble shooting	4-14b, *4-14
Counter:	
bottom view, location of parts	(5-34)
front view, location of parts	(5-35), (5-36)
functional block diagram	(4-1)
rear view, location of parts	(5-37)
servicing block diagram	(4-2)
top view, location of parts	(5-33)
visual inspection	5-2c
Counter cover description, general	1-3d
Coupled count decade flip-flop, collector waveforms	(4-22)
Coupled low-speed count decade flip-flop, schematic diagram	(4-21)
Coupled scaler flip-flop, collector waveforms	(4-13)
Coupled scaler flip-flop, schematic diagram	(4-12)
Crystal A3Y1Y1, replacement of	5-5ah
Crystal oven, temperature setting procedure	5-5ai
Cycle control:	
functional block diagram	(4-19)
functional description	4-2k, 4-13a
reference standard procedure	*5-6
schematic diagram	(5-71)
timing diagram	(4-18)
trouble shooting	4-13b, *4-13

D

Decimal point lamp coding, schematic diagram	(4-28)
Decimal point lamps, replacement	5-5q
Decoding, readout digits	*4-15
Description of controls, connectors, and indicators	3-3
Description of unit, general	1-3
Description, overall functional	4-2
Digital display description	(3-1), *3-2
Digital display indicator:	
frequency divider A1A12, A1A13, A1A14, A1A15, A1A16, location of parts	(5-47)
frequency divider A1A17, A1A18, location of parts	(5-48)
frequency divider A1A19, location of parts	(5-49)
Digital readout electronic counter description, general	1-3a
Dimensions, overall	1-4r
Display control A1A7, location of parts	(5-42)
Display control description	(3-1), *3-2
Display, reference data	1-4g

E

Electronic gate A1A10, location of parts	(5-45)
Emergency maintenance	3-12
Equipment required with counter	*1-2, 1-6
Equipment supplied with counter	*1-1, 1-5
Extending printed circuit boards	5-4c
Extractor, printed circuit boards	2-6

INDEX (Continued)

Paragraph (Figure) *Table

F

Failure analysis, trouble shooting 4-1f
Failure reports 5-1
Fan motor, service 5-2b
Frequency divider A1A2, A1A3, A1A4, location of parts . . . . . (5-39)
Frequency divider A1A5, location of parts . . . (5-40)
Frequency divider A1A9:
count decades, schematic diagram . . . . . (5-72)
location of parts . . . . . (5-44)
tuning and adjustment 5-4g
Frequency measurement:
100 to 500 mc, procedure *3-17, *3-18
input to A, procedure *3-5
input to C, procedure *3-6
input to converter, procedure *3-7
reference data 1-4a
test applications 3-6a
Frequency multiplier A1A6:
location of parts . . . . . (5-41)
tuning and adjustment 5-4e, *5-14
Frequency multiplier A2A1:
adjustment . . . . . (5-5)
location of parts . . . . . (5-53)
schematic diagram . . . . . (5-62)
tuning and adjustment . . . . . 5-4k(4)
Frequency multiplier, trouble shooting *4-5
Frequency ratio measurement:
numerator to A, procedure *3-9
numerator to C, procedure *3-10
numerator to converter, procedure *3-11
reference data 1-4c
test applications 3-6c
Frequency standard, connection 3-8
Front panel . . . . . (3-1)
Front panel, converter, separation from chassis 5-5s
Front panel, left section . . . . . (5-8)
Front panel, left section exploded view . . . . . (5-9)
Front section, disassembly . . . . . (5-13)
Function control description 3-1, *3-2
Function switch A1S4:
replacement 5-5m, *5-15, *5-16
wafer and terminal designation . . . . . (5-14)
Function switch:
external wire chart *5-15
internal wire chart *5-16
schematic diagram . . . . . (5-81)
Functional description:
A amplifier 4-2d, 4-6a
B amplifier 4-2e, 4-7a
C amplifier 4-2f, 4-8a
converter 4-2c, 4-5a
count control 4-2j, 4-12a
count decades 4-2l, 4-14a
cycle control 4-2k, 4-13a
gate control 4-2i, 4-11a
multiplier, 10 mc and 1 mc 4-2g, 4-9a

Paragraph (Figure) *Table

overall 4-2
power supply 4-2n, 4-16a
radio frequency oscillator 4-2b, 4-4a
readout 4-2m, 4-15a
scaler 4-2h, 4-10a
Functional operation, non-technical discussion of 3-1
Functional sections 4-2a
Fuses, replacement of 3-9, 3-12

G

Gate control:
functional and servicing block diagram . . . . . (4-16)
functional description 4-2i, 4-11a
reference standard procedure *5-10
schematic diagram . . . . . (5-69)
trouble shooting 4-11b, *4-11
Gate indicator description . . . . . (3-1), *3-2
Gearshaft MP22, replacement 5-5v
General description of equipment 1-2

H

Harmonic generator, tuning and adjustment . . . . . 5-4k(6), (5-6)
High-speed count flip-flop, schematic diagram . . . . . (4-23)

I

Identification, stock number 6-4
Indicators:
description 3-3
front panel . . . . . (3-1)
Inspection and adjustment, installation 2-7
Installation:
cable assemblies 2-5
inspection and adjustment 2-7
interference reduction 2-8
power requirements 2-2
requirements 2-4
site selection 2-3
unpacking 2-1
Interference reduction 2-8

L

Lamps:
annunciator, replacement 5-5p
decimal points, replacement 5-5q
Level meter A2M1 calibration . . . . . 5-4k(7), (5-7)
Level meter description . . . . . (3-1), *3-2
List of manufacturers *6-2
Location of parts, general 5-6
Logic diagram, overall . . . . . (4-3)
Low-speed count decade flip-flop, schematic diagram . . . . . (4-20)

INDEX (Continued)

Paragraph (Figure) *Table

M

Maintenance:
emergency . . . 3-12
operator's . . . 3-9
parts list . . . *6-1, 6-2
preventive . . . 3-11, 5-2
Manufacturers, list of . . . *6-2, 6-3
Measurement:
frequency . . . 3-6a
frequency-ratio . . . 3-6c
operating suggestions frequency below 10 cps . . . 3-5a
operating suggestions frequency 10 cps to 1 mc . . . 3-5b
operating suggestions frequency 1 mc to 10 mc . . . 3-5c
operating suggestions frequency 10 mc to 100 mc . . . 3-5d
operating suggestions frequency 100 mc to 500 mc . . . 3-5e
period and multiple period . . . 3-6b
time interval . . . 3-6d
time interval with external standard . . . 3-6e
totalizing . . . 3-6f
Mixer balancing . . . 5-4k(6)
Mixing frequency selector A2S4, terminal designations . . . (5-21)
Mode selector description . . . (3-1), *3-2
Multiplier:
10 mc and 1 mc, functional and servicing block diagram . . . (4-10)
10 mc and 1 mc, functional description . . . 4-2g, 4-9a
10 mc and 1 mc, reference standard procedure . . . *5-5
10 mc and 1 mc, schematic diagram . . . (5-66)
10 mc and 1 mc, trouble shooting . . . 4-9b, *4-9

O

Operating checks and adjustments . . . 3-10
Operating precautions . . . 3-4
Operating procedures general . . . 3-7
Operating suggestions . . . 3-5
Operation, functional . . . 3-1
Operational reports . . . 5-1
Operator's maintenance . . . 3-9
Oscillator, 1 mc, A3Y1:
disassembly . . . 5-5ae, (5-24), (5-25), (5-26)
frequency generator, location of parts . . . (5-58)
parts access . . . 5-5ad
replacement procedure . . . 5-5ab
selection of A3Y1C4 . . . 5-5aj, (5-30)
selection of A3Y1R1 . . . 5-5ak, (5-31)
shipping instructions . . . 5-5ac
temperature setting test setup . . . 5-5ai, (5-28), (5-29)
trouble-shooting test setup . . . (5-32)

Paragraph (Figure) *Table

Oscillator power supply and amplifier, location of parts . . . (5-60)
Output gating system, schematic diagram . . . (4-14)
Oven, crystal:
disassembly . . . (5-25)
parts location . . . (5-27)
frequency vs temperature curve . . . (5-29)
replacement procedure . . . 5-5u
temperature adjustment procedure . . . 5-5ac, (5-32)
Oven indicator description . . . (3-1), *3-2

P

Parts list, maintenance . . . *6-1, 6-2
Parts location . . . 5-6
Parts, printed circuit board, replacement . . . 5-5f
Performance reports . . . 5-1
Period and multiple period measurement test applications . . . 3-6b
Period measurement, procedure . . . *3-8
Period measurement reference data . . . 1-4b
Power cable, assembly . . . 2-5a
Power connector description . . . (3-2), *3-2
Power control description . . . (3-1), *3-2
Power distribution diagram . . . (5-59)
Power indicator description . . . (3-1), *3-2
Power requirements . . . 1-4p, 2-2
Power supply:
functional and servicing block diagram . . . (4-30)
functional description . . . 4-2n, 4-16a
reference standard procedure . . . *5-3
regulator, tuning and adjustment . . . 5-4d
schematic diagram . . . (5-80)
trouble shooting . . . 4-16b, *4-18
Power switch A1S1:
external wire chart . . . *5-19
internal wire chart . . . *5-20
replacement . . . 5-5o, *5-19, *5-20
wafer and terminal designations . . . (5-16)
Precautions, operating . . . 3-4
Preparation for use, operation . . . 3-2
Preventive maintenance . . . 3-11, 5-2
Printed circuit board, extractor . . . 2-6
Printed circuit board removal and extension . . . (5-1)
Printed circuit boards, extending . . . 5-4c
Printer cable, assembly . . . 2-5d
Printer connector, connections to . . . *2-1
Printer connector description . . . (3-2), *3-2
Printer interface, reference data . . . 1-4n
Procedure:
frequency measurement, 100 to 500 mc . . . *3-17, *3-18
frequency measurement, input to A . . . *3-5
frequency measurement, input to C . . . *3-6
frequency measurement, input to converter . . . *3-7

INDEX (Continued)

Paragraph (Figure) *Table

frequency ratio measurement, numerator to A *3-9
frequency ratio measurement, numerator to C *3-10
frequency ratio measurement, numerator to converter *3-11
obtaining standard frequency *3-19
obtaining standard output *3-23
period measurement *3-8
reference standard, A amplifier *5-8
reference standard, B amplifier *5-9
reference standard, C amplifier *5-9
reference standard, converter *5-12
reference standard, count control *5-11
reference standard, count decades *5-6
reference standard, cycle control *5-6
reference standard, gate control *5-10
reference standard, multiplier, 10 mc and 1 mc *5-5
reference standard, power supply *5-3
reference standard, radio frequency oscillator *5-4
reference standard, readout *5-6
reference standard, scaler *5-7
reference standards, general *5-1, 5-3
scaling, input to A *3-20
scaling, input to C *3-21
scaling, input to converter *3-22
self-test *3-4
time interval measurement *3-12
time interval measurement, external clock *3-13
totalizing, input to A *3-14
totalizing, input to C *3-15
totalizing, input to converter *3-16
trouble shooting 4-3b
turn-off *3-24
turn-on *3-3
Pushbutton and bar description . . . . . (3-1), *3-2

R

Radio-frequency detector, fabrication diagram . . . . . (5-3)
Radio-frequency oscillator A3:
amplitude adjustment 5-4j
description, general 1-3b
frequency adjustment 5-4i
functional and servicing block diagram . . . (4-4)
functional description 4-2b, 4-4a
left side view, location of parts . . . . . (5-55)
parts access 5-5aa
reference standard procedure *5-4
right side view, location of parts . . . . . (5-56)
schematic diagram . . . . . (5-59)
trouble shooting 4-4b, *4-4
Readout:
annunciator, schematic diagram . . . . . (5-78)

Paragraph (Figure) *Table

decimal point coding, schematic diagram . . (5-79)
digital display, schematic diagram . . . . . (5-77)
functional and servicing block diagram . . . (4-29)
functional description 4-2m, 4-15a
reference standard procedure *5-6
trouble shooting 4-15b, *4-17
Readout decoding, schematic diagram . . . . . (4-27)
Readout digits decoding *4-15
Readout indicator driver, schematic diagram . . . . . (4-26)
Rear panel . . . . . (3-2)
Reference data, equipment 1-4
Reference designations, parts list 6-1a
Reference designations, prefix, parts list 6-1b
Reference frequency control description . . . . . (3-2), *3-2
Reference frequency input, reference data 1-4i
Reference standard procedure:
A amplifier *5-8
B and C amplifiers *5-9
converter *5-12
count control *5-11
count decades *5-6
gate control *5-10
general *5-1, 5-3
multiplier, 10 mc and 1 mc *5-5
power supply *5-3
radio frequency oscillator *5-4
scaler *5-7
test equipment required for *5-2
Replacement:
1 mc oscillator 5-5ab
af-rf amplifier A1A20 . . . . . 5-5h
channel A variable attenuator A1A21 . . . . . 5-5i
channel B variable attenuator A1A22 . . . . . 5-5j
channel C variable attenuator A1A23 . . . . . 5-5k
crystal A3Y1Y1 . . . . . 5-5ah
decimal point lamps 5-5q
function switch A1S4 . . . . . 5-5m, *5-15, *5-16
gearshaft MP22 . . . . . 5-5v
general 5-5
leads on connectors 5-5al, 5-5am
mixing frequency selector switch A2S4 . . . . 5-5u
power switch A1S1 . . . . . 5-5o, *5-19, *5-20
printed circuit boards A1A1 . . . . . 5-5b
printed circuit boards A1A2-A1A7, A1A9 and A1A10 . . . . . 5-5a
printed circuit board A1A8 . . . . . 5-5d
printed circuit board A1A11 . . . . . 5-5e
printed circuit boards A1A12-A1A19 . . . . . 5-5c
printed circuit board parts 5-5f
resistor A2R7 . . . . . 5-5y
rf transformer A2T1 . . . . . 5-5x
std freq out switch A1S2 . . . . . 5-5n, *5-17
time-base switch A1S3 . . . . . 5-5n, *5-17
transistors A3Y1Q5 to A3Y1Q7 . . . . . 5-5af
transistor A3Y1Q8 . . . . . 5-5ag
units annunciator lamps 5-5p

INDEX (Continued)

Paragraph (Figure) *Table

Reset 1-40
Reset control description . . . . . (3-1), *3-2
Reshipment, preparation 1-8
Rf cables, assembly 2-5b
Rf transformer A2T1, replacement 5-5x

S

Scaled outputs, reference data 1-4m
Scaler flip-flop, schematic diagram . . . . . (4-11)
Scaler frequency divider A1A2 to A1A4, schematic diagram . . . . . (5-67)
Scaler frequency divider A1A5, schematic diagram . . . . . (5-66)
Scaler:
  functional and servicing block diagram . . . (4-15)
  functional description 4-2h, 4-10a
  reference standard procedure *5-7
  trouble shooting 4-10b, *4-10
Scaling:
  converter input procedure *3-22
  input frequency, test applications 3-6h
  input to A, procedure *3-20
  input to C, procedure *3-21
  standard frequency, test application 3-6g
Schematic diagram:
  A amplifier . . . . . (5-63)
  B amplifier . . . . . (5-64)
  C amplifier . . . . . (5-65)
  converter A2 . . . . . (5-61)
  count control . . . . . (5-70)
  count decades frequency divider A1A9 . . . . (5-72)
  count decades frequency divider . . . (5-74), (5-75)
  count decades, inverter . . . . . (5-73)
  count decades, printer connector . . . . . (5-76)
  coupled low-speed count decade flip-flop . . . . . (4-21)
  coupled scaler flip-flop . . . . . (4-12)
  cycle control . . . . . (5-71)
  decimal point lamp coding . . . . . (4-28)
  frequency multiplier . . . . . (5-62)
  function switch . . . . . (5-81)
  gate control . . . . . (5-69)
  high-speed count flip-flop . . . . . (4-23)
  low-speed count decade flip-flop . . . . . (4-20)
  multiplier, 10 mc and 1 mc . . . . . (5-66)
  output gating system . . . . . (4-14)
  power supply . . . . . (5-80)
  radio frequency oscillator A3 . . . . . (5-59)
  readout, annunciator . . . . . (5-78)
  readout, decimal point coding . . . . . (5-79)
  readout decoding . . . . . (4-27)
  readout, digital display . . . . . (5-77)
  readout indicator driver . . . . . (4-26)
  scaler frequency divider A1A1 . . . . . (5-67)
  scaler frequency divider A1A2 to A1A4 . . . (5-68)
  standard frequency output switch . . . . . (5-81)
  time-base switch . . . . . (5-81)
  typical scaler flip-flop . . . . . (4-11)
Scope of technical manual 1-1
Sections, functional 4-2a
Self-test procedure *3-4
Sensitivity control description, functional location . . . . . (3-1), *3-2
Servicing block diagram 4-2c
Site selection 2-3
Standard frequency:
  procedure *3-19
  reference data 1-41
Standard 1-mc output, reference data 1-4k
Standard output, procedure for obtaining *3-23
Standard frequency or scale out connector description, functional location . . . . . (3-2), *3-2
Standard frequency out switch A1S2:
  external wire chart *5-17
  internal wire chart *5-18
  replacement 5-5h, *5-17, *5-18
  schematic diagram . . . . . (5-81)
  wafer and terminal designations . . . . . (5-15)
Stock number identification 6-4
Store and track mode readout waveforms . . . . (4-25)
Symbols, F, T, and S select *4-1
Symptom elaboration, trouble shooting 4-1b
Symptom recognition, trouble shooting 4-1a

T

Tee connectors 2-5c
Test application 3-6
Test equipment, trouble shooting 4-2a
Test points:
  converter . . . . . (5-4)
  location . . . . . (5-2)
Thumbscrews description . . . . . (3-1), (3-2), *3-2
Time-base control description . . . . . (3-1), *3-2
Time-base input connector description . . . . . (3-2), *3-2
Time-base reference data 1-4h
Time-base switch A1S3:
  external wire chart *5-17
  internal wire chart *5-18
  replacement 5-5h, *5-17, *5-18
  wafer and terminal designations . . . . . (5-15)
Time-base switch, schematic diagram . . . . . (5-81)
Time-interval measurement:
  external clock, procedure *3-13
  external clock, reference data 1-4e
  external standard 3-6e
  procedure *3-12
  reference data 1-4d
  test applications 3-6d
Timing diagram, cycle control . . . . . (4-18)
Total count, reference data 1-4f
Totalizing:
  input to A, procedure *3-14
  input to C, procedure *3-15
  input to converter, procedure *3-16
  test application 3-6f

INDEX (Continued)

	Paragraph (Figure) *Table
Trigger error, reference data	1-4j
Trouble shooting:	
A amplifier	4-6b, *4-6
B amplifier	4-7b, *4-7
C amplifier	4-8b, *4-8
converter	4-5b
count control	4-12b, *4-12
count decades	4-14b, *4-14
cycle control	4-13b, *4-13
failure analysis	4-1f
frequency multiplier	*4-5
gate control	4-11b, *4-11
listing fault	4-1c
localizing fault	4-1d, 4-1e
method	4-1
multiplier, 10 mc and 1 mc	4-9b, *4-9
overall	4-3, *4-3
power supply	4-16b, *4-18
procedure	4-3b
radio frequency oscillator	4-4b, *4-4
readout	4-15b, *4-17
scaler	4-10b, *4-10
symptom elaboration	4-1b
symptom recognition	4-1a
test equipment required	4-2a, *4-2
video amplifier	*4-5
Tuning and adjustment:	
af-rf amplifier A1A11	5-4h
amplifier-electronic gate A1A8	5-4f
cavity	5-4k(5)
control settings	5-4b, *5-13
converter	5-4k
frequency divider A1A9	5-4g
frequency multiplier A1A6	5-4e, *5-14
frequency multiplier A2A1	5-4k(4)
general	5-4
harmonic generator	5-4k(5)
level meter A2M1	5-4k(7)
mixer balancing	5-4k(6)
power supply regulator	5-4d
radio-frequency oscillator A3	5-4i, 5-4j
Turn-off procedure	*3-24
Turn-on procedure	*3-3

U

Units annunciator description	(3-1), *3-2
Unpacking and handling	2-1

V

Video amplifier	
location of parts	(5-54)
trouble shooting	*4-5
Voltage inputs, operating precautions	*3-1
Voltage regulator A1A1, location of parts	(5-38)

W

Waveforms:	
coupled count decade flip-flop	(4-22)
coupled scaler flip-flop	(4-13)
store and track mode readout	(4-25)
trigger point B amplifier	(4-7)
Weight	1-4q
Wire chart:	
function switch	*5-15, *5-16
time-base switch A1S3	*5-17, *5-18
standard frequency out switch A1S2	*5-17, *5-18
power switch A1S1	*5-19, *5-20

MIL-M-15071E(SHIPS)

NAVSHIPS NO._____ USER ACTIVITY COMMENT SHEET Vol. No._____

(Fold on dotted lines on reverse side, staple in corner, and send to Bureau of Ships, Code 240, Washington 25, D. C.)

PROBLEM AREA:

Both sides of this form to be reproduced locally as required.

Fold

DEPARTMENT OF THE NAVY
BUREAU OF SHIPS
WASHINGTON 25, D. C.

OFFICIAL BUSINESS

POSTAGE AND FEES PAID
NAVY DEPARTMENT

CHIEF, BUREAU OF SHIPS
PUBLICATIONS AND INFORMATION RETRIEVAL BRANCH
DEPARTMENT OF THE NAVY
WASHINGTON 25, D. C.

Fold

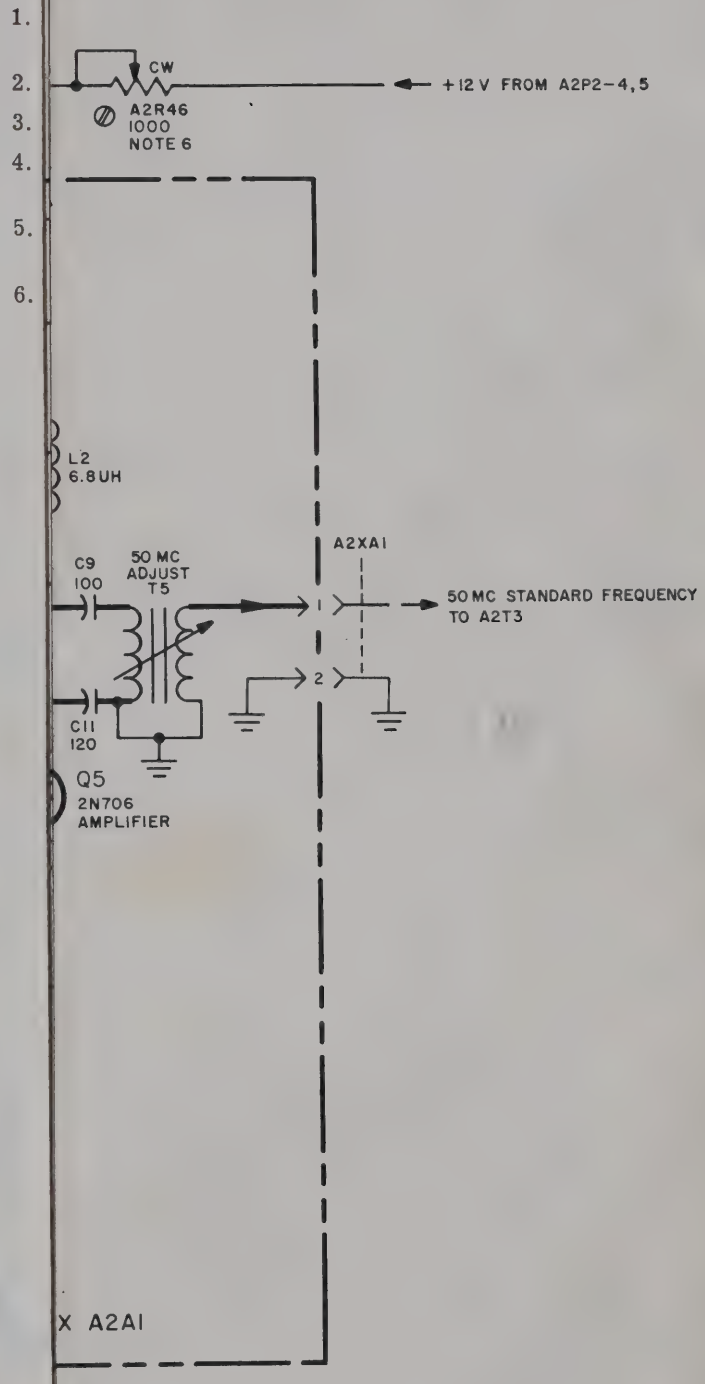

Figure 5-62. Electronic Frequency Converter Frequency Multiplier A2A1, Schematic Diagram

NOTES

1. Unless otherwise specified, component values expressed in ohms and picofarads.
2. Primary signal paths weighted.
3. Dc voltages are preceded by "+" or "-".
4. Alternate value supplied is 0.05 μf. Use 0.047 μf for replacement.
5. On A2A1 Model 25-527L4, R3 and C25 are not included, and emitter of Q4 is connected to ground.
6. A2R46 is 250 ohms on converters with serial No. A4 through A13, A15, A17, A18, A20, A21, A22, A24 through A28, A30, A31, A33, and A36.

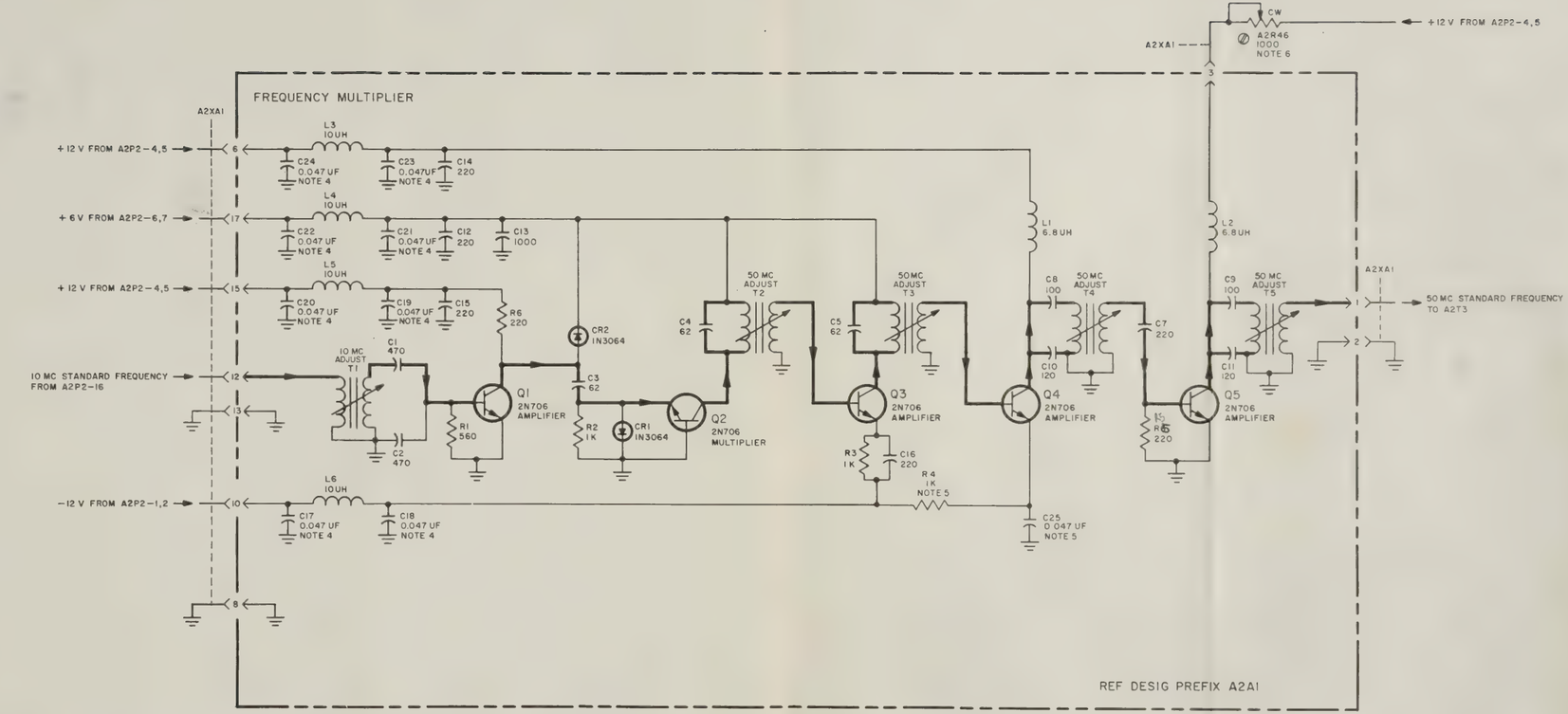

Figure 5-62. Electronic Frequency Converter Frequency Multiplier A2A1, Schematic Diagram

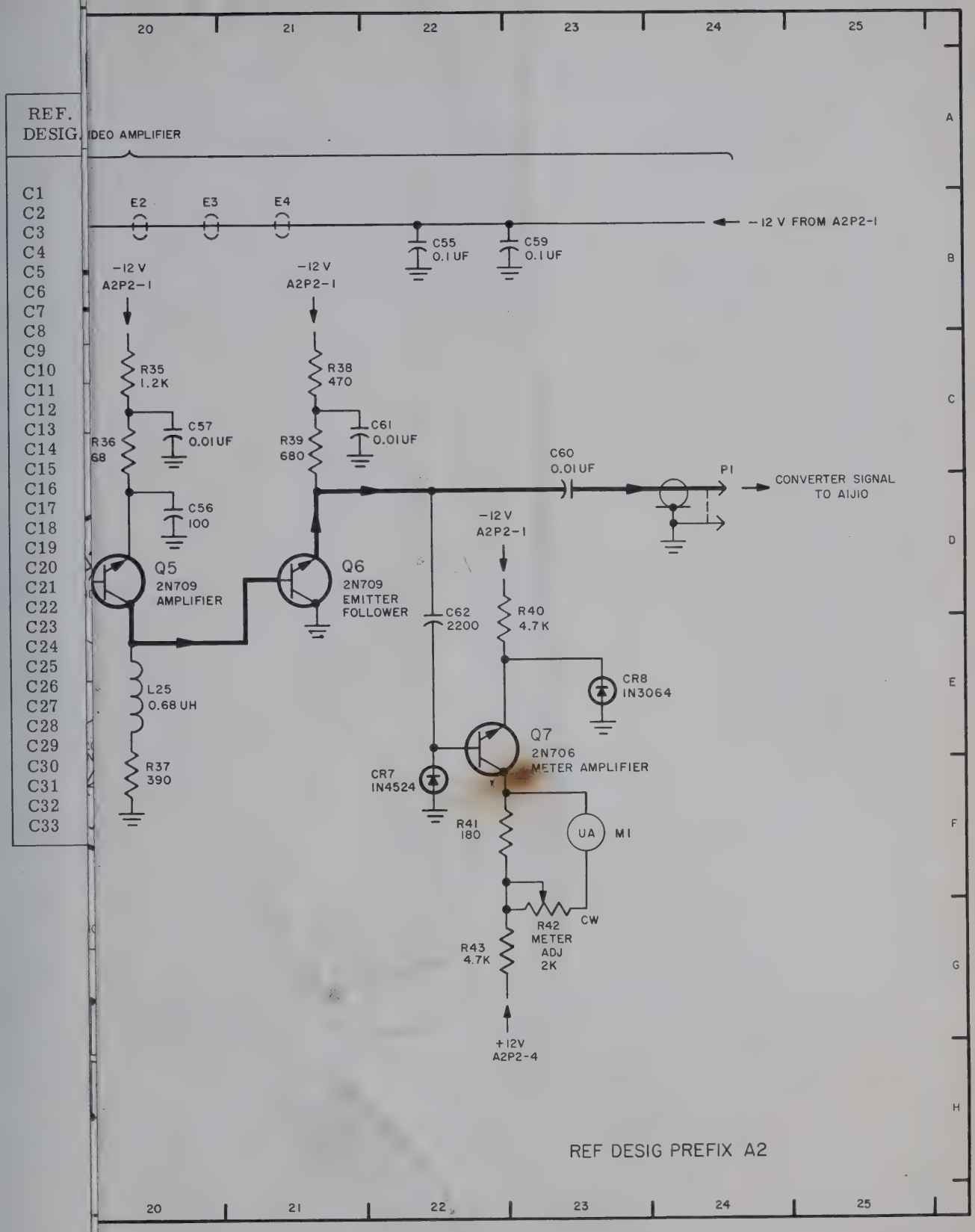

Figure 5-61. Electronic Frequency Converter less Frequency Multiplier A2A1, Schematic Diagram

AN / USM-207

PARTS LOCATION INDEX

REF. DESIG.	DRAWING LOCATION	REF. DESIG.	DRAWING LOCATION	REF. DESIG.	DRAWING LOCATION	REF. DESIG.	DRAWING LOCATION
C1	4B	C34	14E	E11	10E	R14	10F
C2	8D	C35	15E	J1	3B	R15	11F
C3	7D	C44	15D	L1	6G	R16	15E
C4	7D	C45	17D	L2	8G	R17	15E
C5	6D	C46	17C	L3	11D	R19	16C
C6	6E	C47	17E	L4	12D	R20	16D
C7	6E	C50	17B	L5	13D	R21	16B
C8	6E	C51	18D	L6	14D	R22	16C
C9	7F	C52	18C	L19	16E	R23	16E
C10	7F	C53	18E	L20	18E	R28	18E
C11	7F	C54	19B	L25	20E	R29	17C
C12	7F	C55	22B	M1	23F	R30	18B
C13	8F	C56	20D	P1	24D	R31	18C
C14	8F	C57	20C	P2	2C	R32	18F
C15	8F	C59	23B	Q3	16D	R33	19E
C16	8F	C60	23D	Q4	18D	R34	19E
C17	5H	C61	21C	Q5	20D	R35	20C
C18	6G	C62	22E	Q6	21D	R36	20C
C19	7H	CR1	10D	Q7	22E	R37	20F
C20	7H	CR2	10E	R1	4B	R38	21C
C21	7H	CR3	8F	R2	5B	R39	21C
C22	8G	CR7	22F	R3	5B	R40	22E
C23	11B	CR8	23E	R4	6B	R41	22F
C24	10D	E1	19B	R5	6B	R42	23G
C25	10E	E2	20B	R6	7B	R43	22G
C26	10F	E3	20B	R7	8E	S1	5B
C27	10E	E4	21B	R8	8H	S2	7B
C28	11E	E5	8D	R9	8H	S3	8B
C29	12D	E6	10D	R10	11B	S4	7E
C30	12E	E7	10D	R11	10C	T1	8E
C31	13D	E8	10C	R12	11C		
C32	13E	E9	9D	R13	10F		
C33	14D	E10	9C				

NOTES

1. Component values expressed in ohms and picofarads.
2. ——— -- ——— indicates etched circuit assembly boundaries.
3. Names of panel controls and connectors are enclosed in boxes.
4. Primary signal paths weighted.
5. Dc voltages are preceded by "+" or "-".
6. Dc voltages are measured with a CCUH-801 Dc Differential Voltmeter.
7. Parts location information is given in map-type coordinates in accompanying table.
8. Circuit groups are identified by brackets.
9. A2S4 shown in [100] position viewed from control knob or actuator end.

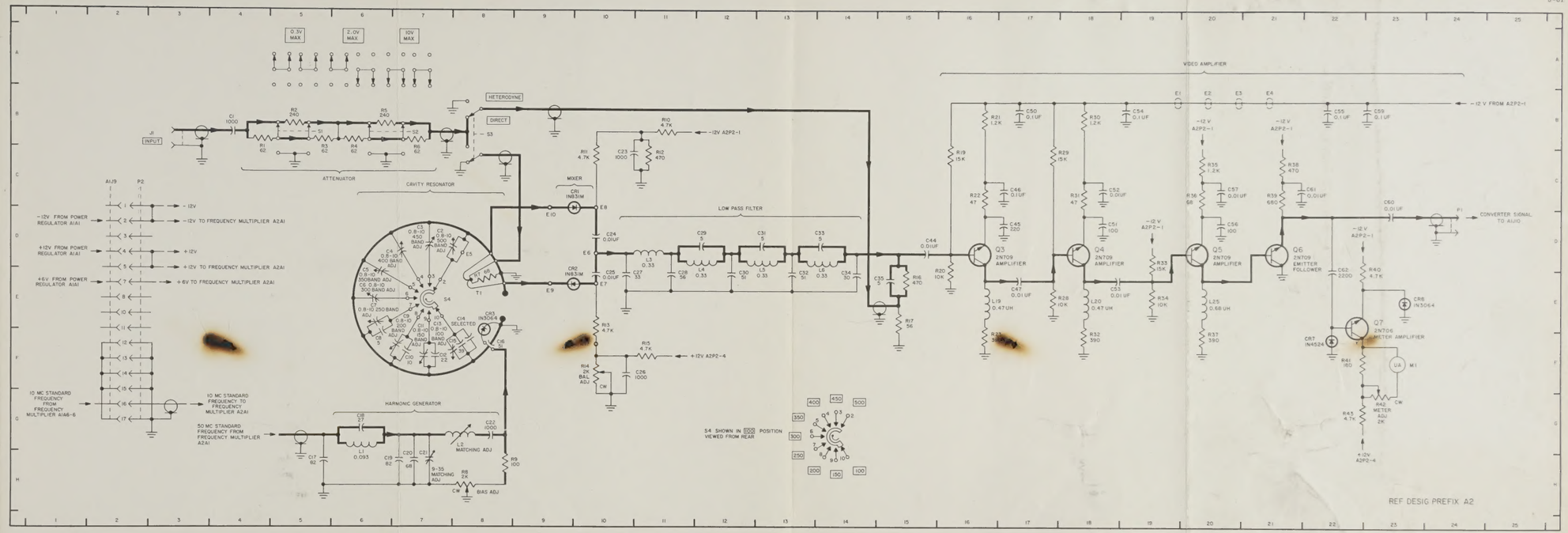

Figure 5-61. Electronic Frequency Converter less Frequency Multiplier A2A1, Schematic Diagram